Anker Innovations Limited. All rights reserved. AnkerMake and AnkerMake Logo are trademarks of Anker Innovations Limited, registered in the United States and other countries. All other trademarks are the property of their respective owners.

51005003445 V01

AnkerMake

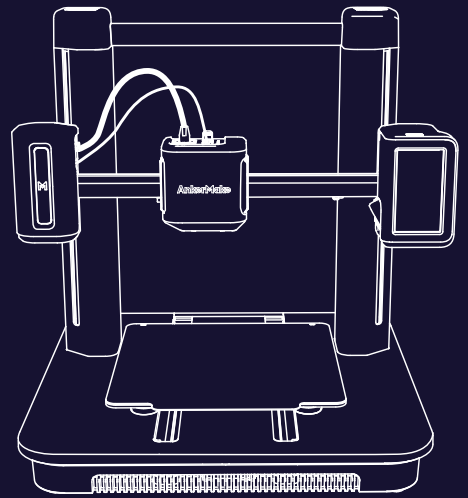

AnkerMake M5

QUICK START GUIDE

AT A GLANCE

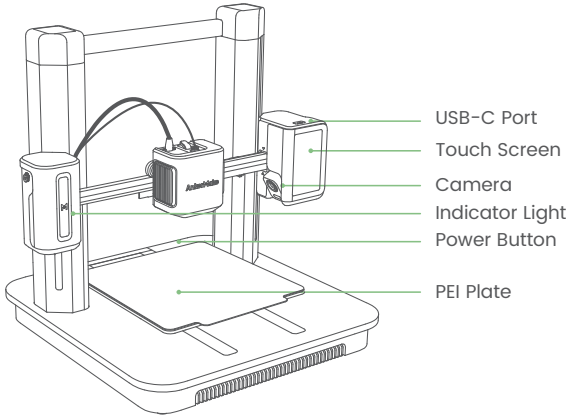

Indicator Light*	Description
Flashing Orange Slowly	Heating up
Fading Green Repeatedly	Printing
Flashing Red	An alarm is going off

* For more indicator light status, visit https://www.ankermake.com.
Product Name: AnkerMake M5 Model: V8111

ASSEMBLING THE PRINTER

What You Need

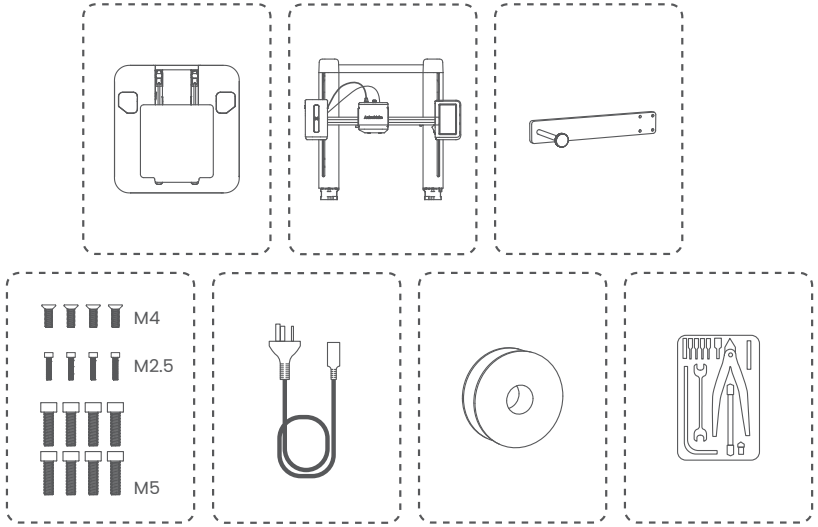

Step 1. Installing Gantry Frame

1. Open the box, then place the foam cover on the ground.

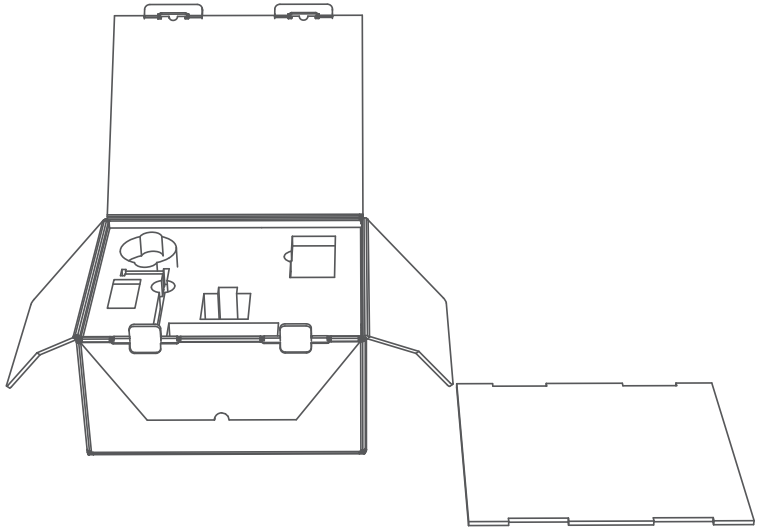

2. Take out all the accessories in the foam, then place the protection foam on the ground as support.

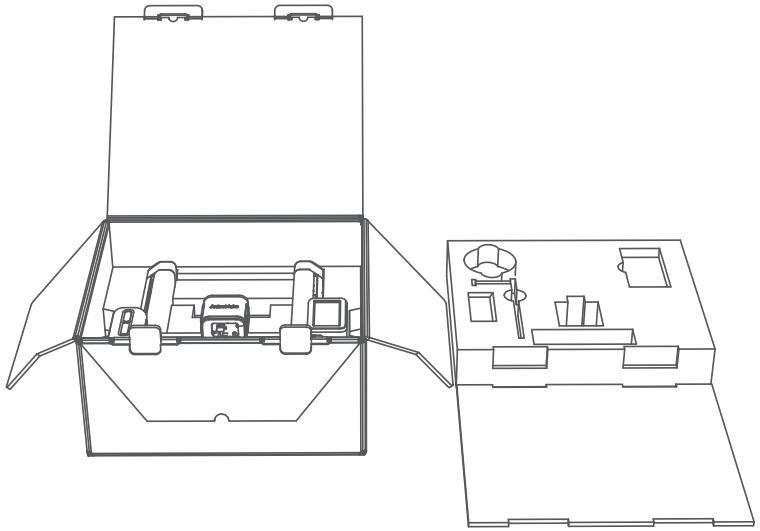

3. Take out the gantry frame with its protection foam and place it on the support foam.

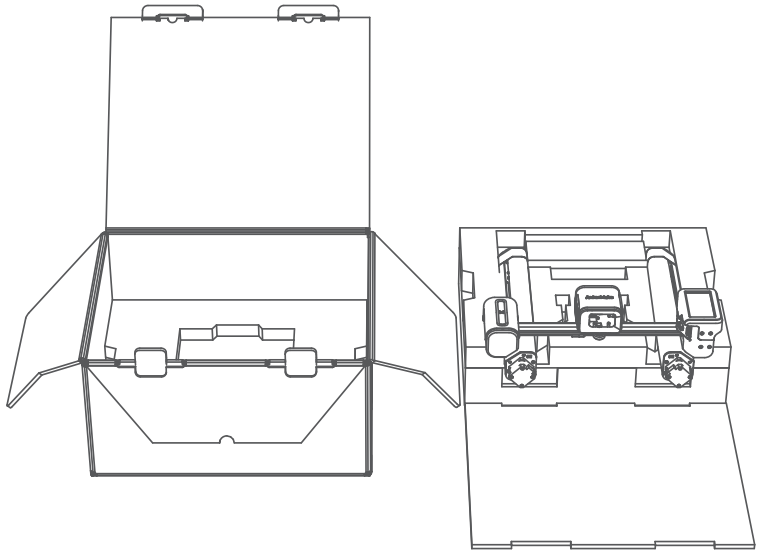

4. Take the gantry frame out of the packaging foam, then put it back as shown below.

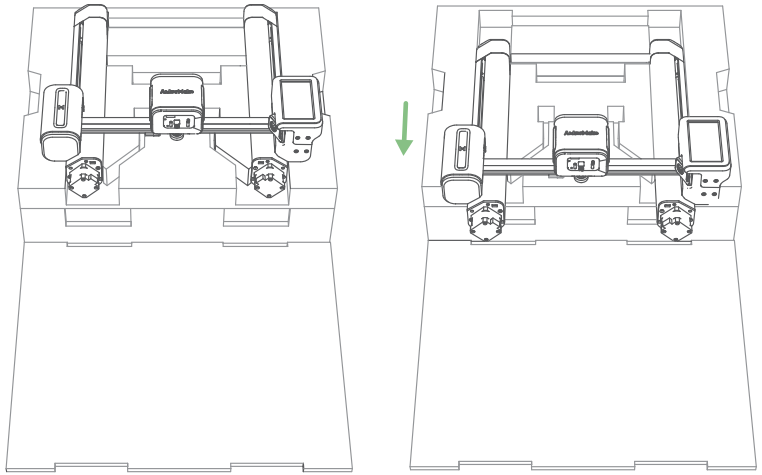

5. Detach the bottom cover from the platform.

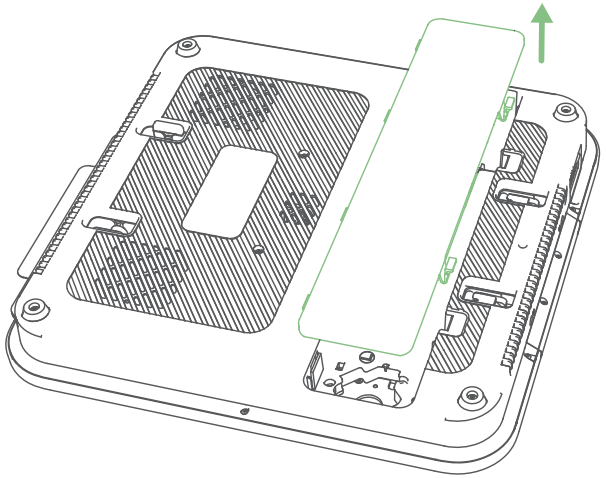

6. Mount the platform through the holes.

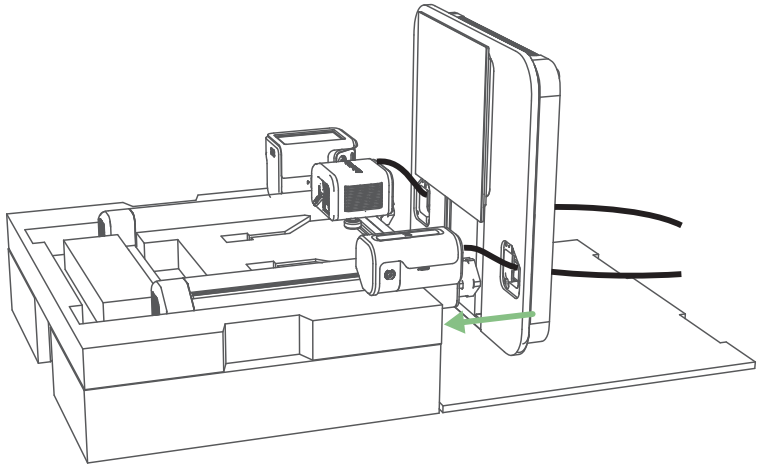

7. Fasten screws into the platform.

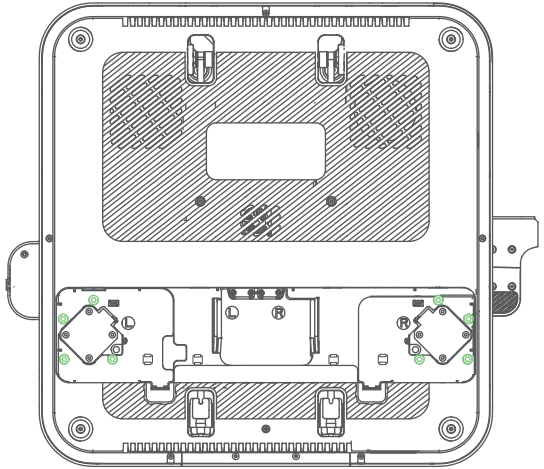

◎ M5

Step 2. Wiring

1. Connect the motor wires.

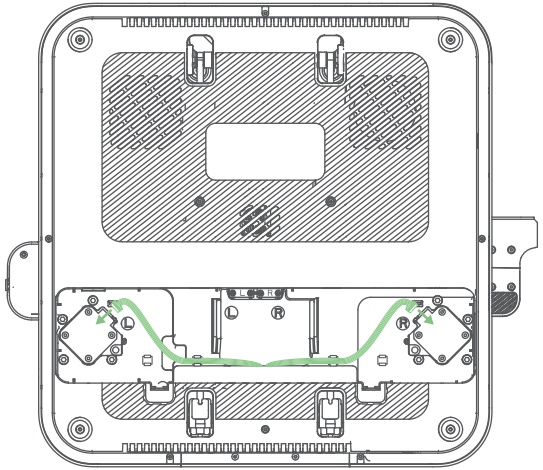

2. Connect and fix the USB-C cables with screws.

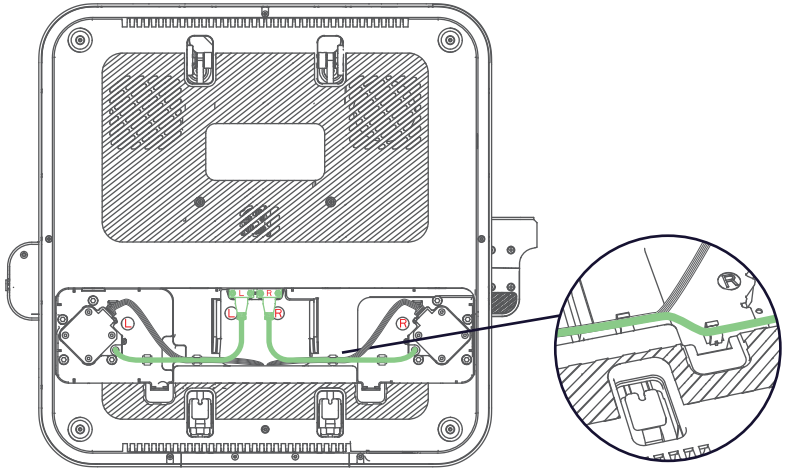

◎ M2.5

3. Put the bottom cover back onto the platform.

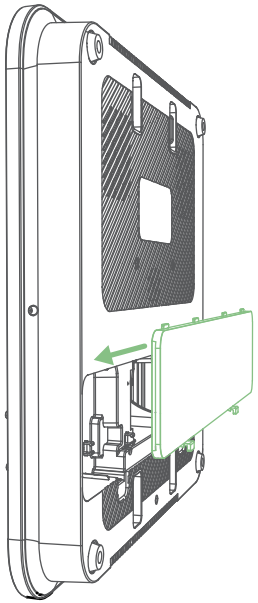

Step 3. Installing Filament Holder

Secure the filament holder with screws.

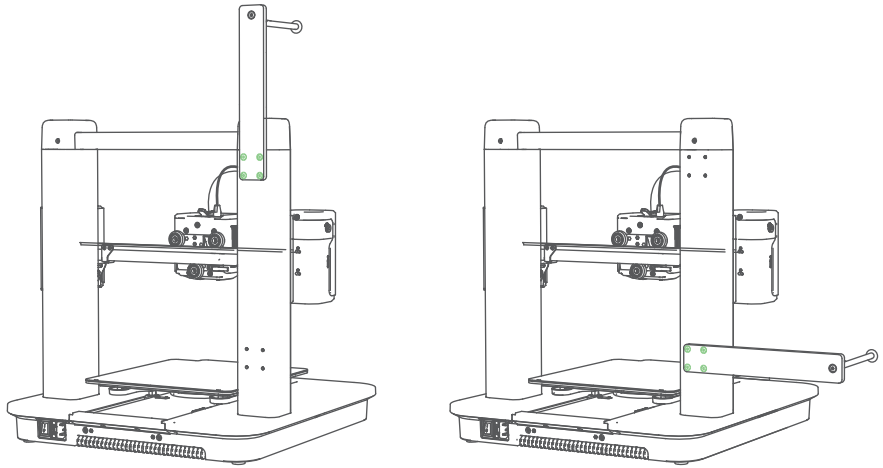

◎ M4

Option 1 Option 2

Step 4. Connecting to Power

1. Connect the printer to a power outlet with the power cable, then power on the printer.

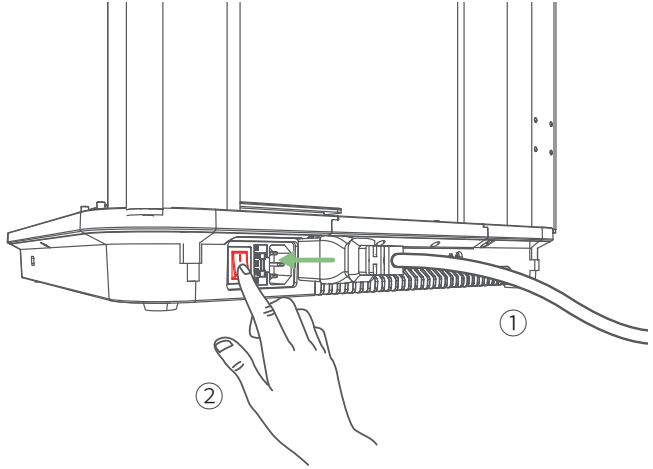

2. Follow instructions on the touch screen to complete the initial setup.

SETTING UP THE SYSTEM

1. Download and install the AnkerMake app, then sign up for an account.

Download on the App Store

GET IT ON Google Play

2. Follow on-screen instructions to add the printer to your device list and connect it to Wi-Fi.

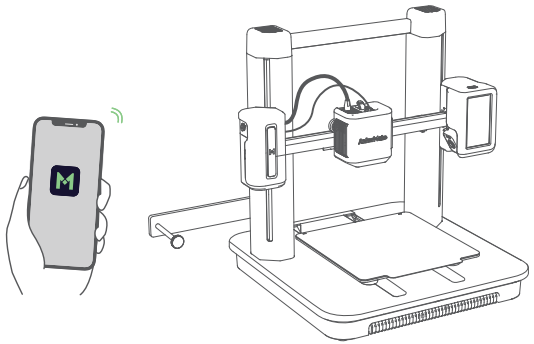

LEVELING HEAT BED

On the touch screen, go to **Control** > **Auto-Level** to level the heat bed.

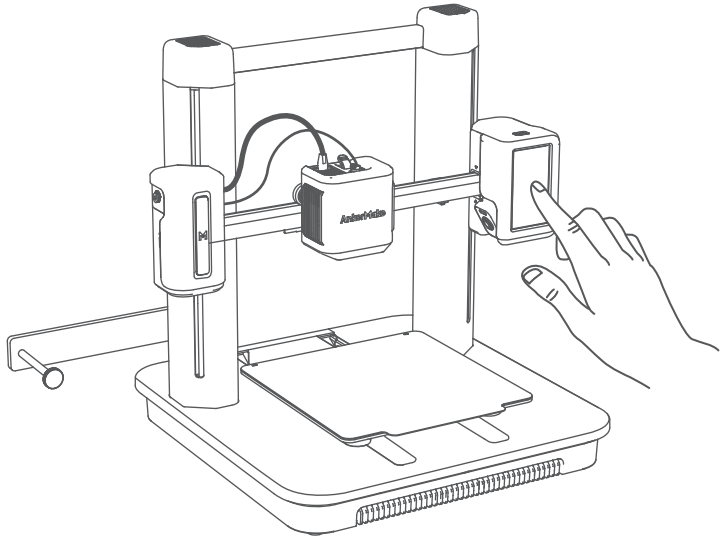

LOADING FILAMENT

1. Place the filament onto the holder.

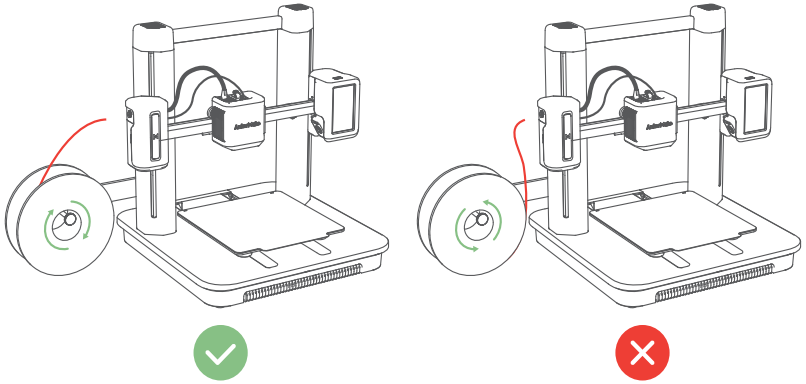

2. Cut the tip of the filament at a 45° angle.

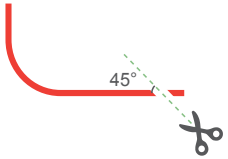

3. Insert the filament until it reaches the extruder. Then press and hold the button on top of the extruder while continuing to insert the filament. Stop when you feel some resistance.

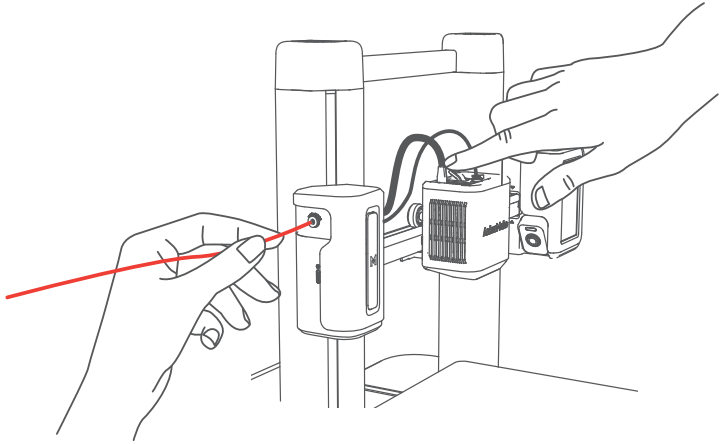

4. On the touch screen, tap **Load** on **Control** > **Extrude**. Wait until filament flows out of the nozzle, then tap **Stop**.

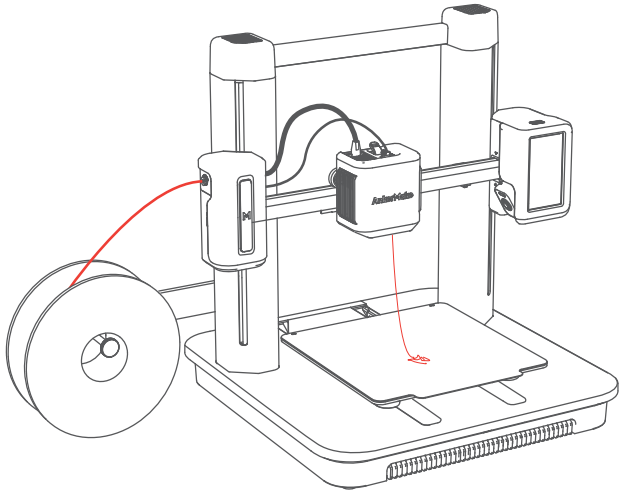

INSTALLING ANKERMAKE SLICER

For the best printing experience, download and install AnkerMake Slicer to your computer from ankermake.com/software.

The AI recognition capabilities will be not available when the printer works with other 3D slicer software, such as Cura and Simplify3D.

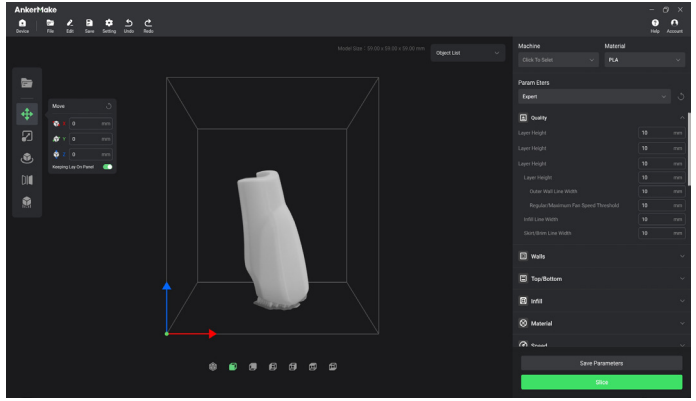

SAFETY

• The power cord shall be connected to socket-outlet with earthing connection.
• The power supply should be installed near the equipment and the socket-outlet must be easily accessible.
• Only use the power cord provided by the manufacturer. Using unauthorized power cords may cause danger and violate the authorization of the product as well as the guarantee.
• Plug of the power cord is considered as the disconnect device. Once unplugged, the product is considered to be disconnected from the power source.
• Do not use the device in an environment where the temperature is too high or too low. Never expose the device to strong sunshine or wet environments.
• The suitable temperature range for the product and its accessories is 15-35°C.
• It is recommended to supply the device in an environment with a temperature that ranges from 15°C ~25°C .
• When supplying, place the device in an environment that has a normal room temperature and good ventilation.
• This equipment is not suitable for use in locations where children are likely to be present. This equipment is not intended for use by children.

• Moving parts. Keep body parts away from moving parts.

• CAUTION Hot parts. Do not touch.

• Do not use the product in any way other than described herein in order to avoid personal injury or property damage.
• User should comply with the laws and regulations of the corresponding countries and regions where the equipment is located (used), abide by professional ethics, pay attention to safety obligations, and strictly prohibit the use of our products or equipment for any illegal purposes. Our company will not be responsible for any violators' legal liability under any circumstances.

NOTICE

Notice (United States Of America)

FCC Statement
This device complies with Part 15 of the FCC Rules. Operation is subject to the following two conditions: (1) this device may not cause harmful interference, and (2) this device must accept any interference received, including interference that may cause undesired operation.
Warning: Changes or modifications not expressly approved by the party responsible for compliance could void the user's authority to operate the equipment.
Note: This equipment has been tested and found to comply with the limits for a Class B digital device, pursuant to Part 15 of the FCC Rules. These limits are designed to provide reasonable protection against harmful interference in a residential installation.
This equipment generates uses and can radiate radio frequency energy and, if not installed and used in accordance with the instructions, may cause harmful interference to radio communications. However, there is no guarantee that interference will not occur in a particular installation. If this equipment does cause harmful interference to radio or television reception, which can be determined by turning the equipment off and on, the user is encouraged to try to correct the interference by one or more of the following measures: (1) Reorient or relocate the receiving antenna. (2) Increase the separation between the equipment and receiver. (3) Connect the equipment into an outlet on a circuit different from that to which the receiver is connected. (4) Consult the dealer or an experienced radio/TV technician for help.

FCC Radio Frequency Exposure Statement
The device has been evaluated to meet general RF exposure requirements. The device can be used in fixed/mobile exposure condition. The min separation distance is 20cm.

Notice: Shielded cables
All connections to other computing devices must be made using shielded cables to maintain compliance with FCC regulations.

Notice (Canada)

This device complies with Industry Canada licence-exempt RSS standard(s). Operation is subject to the following two conditions:
(1) this device may not cause interference, and
(2) this device must accept any interference, including interference that may cause undesired operation of the device.
Le présent appareil est conforme aux CNR d'Industrie Canada applicables aux appareils radio exempts de licence. L'exploitation est autorisée aux deux conditions suivantes:
(1) l'appareil nedoit pas produire de brouillage, et
(2) l'utilisateur de l'appareil doit accepter tout brouillage radioélectrique subi, même si le brouillage est susceptible d'en compromettre le fonctionnement.

This Class B digital apparatus complies with Canadian ICES-003.
Cet appareil numérique de la classe B est conforme à la norme NMB-003 du Canada.

IC RF Statement:
When using the product, maintain a distance of 20cm from the body to ensure compliance with RF exposure requirements.

The following importer is the responsible party
Company Name: Fantasia Trading LLC
Address: 5350 Ontario Mills Pkwy, Suite 100, Ontario, CA 91764
Telephone: 1-800-988-7973

Lors de l'utilisation du produit, maintenez une distance de 20 cm du corps afin de vous conformer aux exigences en matière d'exposition RF.

Notice (Europe and United Kingdom)

This product complies with the radio interference requirements of the European Community.

Declaration of Conformity
Hereby, Anker Innovations Limited declares that this device is in compliance with the essential requirements and other relevant provisions of Directive 2014/53/EU.For the declaration of conformity, visit the Web site: https://ankermake.com.

This product complies with the radio interference requirements of the United Kingdom

Declaration of Conformity
Hereby, Anker Innovations Limited declares that this device is in compliance with Radio Equipment Regulations 2017(SI 2017/1206). The full text of the UK declaration of conformity is available at the following internet address: https://ankermake.com.

RF exposure information:
The Maximum Permissible Exposure (MPE) level has been calculated based on a distance of d=20 cm between the device and the human body. To maintain compliance with RF exposure requirement, use product that maintain a 20cm distance between the device and human body.

Frequency bands and power are as below:

Function	Bands	Operation Frequency	Max.Power
Wi-Fi	2.4GHz	2412-2472MHz	EIRP 19.84 dBm
Bluetooth	2.4GHz	2402-2480 MHz	EIRP 9.18 dBm

The following importer is the responsible party (contract for EU matters):
Anker Innovations Deutschland GmbH I Georg-Muche-Strasse 3, 80807 Munich, Germany

The following importer is the responsible party (contract for UK matters):
Anker Technology (UK) Limited I GNR8, 49 Clarendon Road, Watford, Hertfordshire, WD17 1HP, United Kingdom

Your product is designed and manufactured with high quality materials and components, which can be recycled and reused.

This symbol means the product must not be discarded as household waste, and should be delivered to an appropriate collection facility for recycling. Proper disposal and recycling helps protect natural resources, human health and the environment. For more information on disposal and recycling of this product, contact your local municipality, disposal service, or the shop where you bought this product.

Trademarks

Bluetooth®
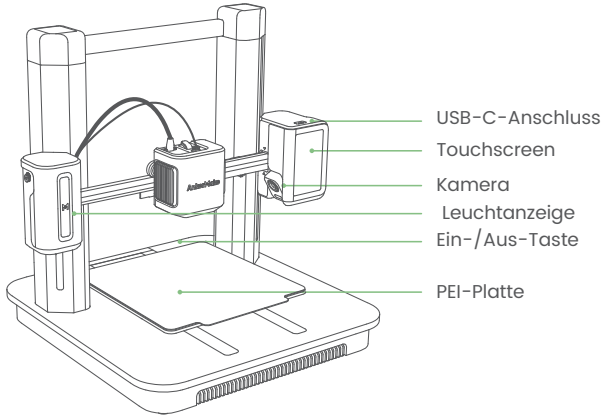
The Bluetooth® word mark and logos are registered trademarks owned by the Bluetooth SIG, Inc. and any use of such marks by Anker Innovations Limited is under license. Other trademarks and trade names are those of their respective owners.