RF TEST REPORT

Product Name: Smartphone

Model Number: Hyper 8 Ultra, Hyper 8, Hyper 8 Pro, Hyper 8E, Hyper 8S, Hyper 8 Plus, Hyper 9S, Hyper 9 Plus, Hyper 9, Hyper 9 Ultra

FCC ID: 2AOKUHYPER8

Issued For : SHENZHEN TUGAO INTELLIGENT CO.,LTD

8th Floor, Bldg A, Jinggang Science&Technology Park, Fuyong, Bao'an District Shenzhen, China

Issued By : Shenzhen LGT Test Service Co., Ltd.

Room 205, Building 13, Zone B, Zhenxiong Industrial Park, No.177, Renmin West Road, Jinsha, Kengzi Street, Pingshan District, Shenzhen, Guangdong, China

Report Number:	LGT25I189RF17
Sample Received Date:	Sep. 25, 2025
Date of Test:	Sep. 25, 2025 ~ Nov. 12, 2025
Date of Issue:	Nov. 12, 2025

The test report is effective only with both signature and specialized stamp. This report shall not be reproduced except in full without the written approval of the Laboratory. The results in this report only apply to the tested sample.

TEST REPORT CERTIFICATION

Applicant:	SHENZHEN TUGAO INTELLIGENT CO.,LTD
Address:	8th Floor, Bldg A, Jinggang Science&Technology Park, Fuyong, Bao'an District Shenzhen, China
Manufacturer:	SHENZHEN TUGAO INTELLIGENT CO.,LTD
Address:	8th Floor, Bldg A, Jinggang Science&Technology Park, Fuyong, Bao'an District Shenzhen, China
Product Name:	Smartphone
Trademark:	HOTWAV
Model Number:	Hyper 8 Ultra, Hyper 8, Hyper 8 Pro, Hyper 8E, Hyper 8S, Hyper 8 Plus, Hyper 9S, Hyper 9 Plus, Hyper 9, Hyper 9 Ultra
Sample Status:	Normal

APPLICABLE STANDARDS	
STANDARD	TEST RESULTS
FCC Part 22H and 24E, 27 KDB 971168 D01 v03r01, ANSI C63.26(2015)	PASS

Prepared by:

Zane Shan

Zane Shan
Engineer

Approved by:

Vita Li
Technical Director

Table of Contents **Page**

1 SUMMARY OF TEST RESULTS **4**

2 INTRODUCTION **5**

2.1 TEST LABORATORY 5

2.2 MEASUREMENT UNCERTAINTY 5

3. PRODUCT INFORMATION **6**

4 TEST CONFIGURATION OF EQUIPMENT UNDER TEST **7**

5 MEASUREMENT INSTRUMENTS **8**

6 TEST ITEMS **9**

6.1 CONDUCTED OUTPUT POWER 9

6.2 PEAK TO AVERAGE RATIO 10

6.3 TRANSMITTER RADIATED POWER (EIRP/ERP) 11

6.4 OCCUPIED BANDWIDTH 12

6.5 FREQUENCY STABILITY 13

6.6 SPURIOUS EMISSIONS AT ANTENNA TERMINALS 14

6.7 BAND EDGE 15

6.8 FIELD STRENGTH OF SPURIOUS RADIATION MEASUREMENT 16

APPENDIX I. TEST DATA **18**

RADIATED SPURIOUS EMISSION 18

2G 18

3G 24

APPENDIX II- PHOTOS OF TEST SETUP **33**

Revision History

Rev.	Issue Date	Contents
00	Nov. 12, 2025	Initial Issue

1 SUMMARY OF TEST RESULTS

Test procedures according to the technical standards:

The radiated emission testing was performed according to the procedures of KDB 971168 D01 v03r01 and ANSI C63.26-2015

FCC Rules	Test Description	Test Limit	Test Result	Reference
2.1046	Conducted Output Power	Reporting Only	PASS	
22.913d 24.232d	Peak-to-Average Ratio	< 13 dB	PASS	
2.1046 22.913 24.232 27.50	Effective Radiated Power/Equivalent Isotropic Radiated Power	< 7 Watts max. ERP(Part 22) < 2 Watts max. EIRP(Part 24) <1 Watts max. EIRP(Part 27)	PASS	
2.1049 22.917 24.238 27.53	Occupied Bandwidth	Reporting Only	PASS	
2.1055 22.355 24.235 27.54	Frequency Stability	< 2.5 ppm (Part 22) Emission must remain in band (Part 24) Emission must remain in band (Part 27)	PASS	
2.1051 22.917 24.238 27.53	Spurious Emission at Antenna Terminals	< 43+10log10(P[Watts])	PASS	
2.1053 22.917 24.238 27.53	Field Strength of Spurious Radiation	< 43+10log10(P[Watts])	PASS	
2.1051 22.917 24.238 27.53	Band Edge	< 43+10log10(P[Watts])	PASS	

2 INTRODUCTION

2.1 TEST LABORATORY

Company Name:	Shenzhen LGT Test Service Co., Ltd.
Address:	Room 205, Building 13, Zone B, Zhenxiong Industrial Park, No.177, Renmin West Road, Jinsha, Kengzi Street, Pingshan District, Shenzhen, Guangdong, China
Accreditation Certificate:	FCC Registration No.: 746540
	CAB ID: CN0136

2.2 MEASUREMENT UNCERTAINTY

The measurement uncertainties shown below were calculated in accordance with the requirements of ANSI C63.26. All measurement uncertainty values are shown with a coverage factor of k = 2 toindicate a 95% level of confidence. The measurement data shown herein meets or exceeds the UCISPRmeasurement uncertainty values specified in CISPR 16-4-2 and, thus, can be compared directly tospecified limits to determine compliance.

No.	Item	Uncertainty
1	Occupied Channel Bandwidth	±0.46%
2	RF Output Power, Conducted	±0.71dB
3	Power Spectral Density, Conducted	±1.57dB
4	Unwanted Emission, Conducted	±0.63dB
5	Conducted emission	±2.80dB
6	All Emissions, Radiated (0.009-30MHz)	±2.16dB
7	All Emissions, Radiated (30MHz-1GHz)	±4.61dB
8	All Emissions, Radiated (1GHz-18GHz)	±5.49dB
9	Temperature	±0.5°C
10	Humidity	±2%
11	Duty Cycle	±2.3%

Note: The measurement uncertainty is not included in the test result.

3. PRODUCT INFORMATION

Product Name:	Smartphone
Test Model Number:	Hyper 8 Ultra
Series Number:	Hyper 8, Hyper 8 Pro, Hyper 8E, Hyper 8S, Hyper 8 Plus, Hyper 9S, Hyper 9 Plus, Hyper 9, Hyper 9 Ultra
Model Difference:	Only model different.
Tx Frequency:	GSM/GPRS/EGPRS: 850: 824 MHz ~ 849MHz 1900: 1850 MHz ~ 1910MHz WCDMA: Band V: 824 MHz ~ 849 MHz Band II: 1850 MHz ~ 1910 MHz Band IV: 1710 MHz ~ 1755 MHz
Rx Frequency:	GSM/GPRS/EGPRS: 850: 869 MHz ~ 894 MHz 1900: 1930 MHz ~ 1990MHz WCDMA: Band V: 869 MHz ~ 894 MHz Band II: 1930 MHz ~ 1990 MHz Band IV: 2110 MHz ~ 2155 MHz
Modulation Characteristics:	GMSK for GSM/GPRS; GMSK and 8PSK for EDGE WCDMA: QPSK; HSDPA: QPSK/16QAM; HSUPA: BPSK
SIM Card:	SIM 1 and SIM 2 is a chipset unit and tested as single chipset, SIM 1 is used to tested.
Antenna Designation:	PIFA Antenna
Antenna gain:	GSM 850: -2.15dBi GSM 1900: 1.31dBi WCDMA B2: 1.31dBi WCDMA B4: 0.14dBi WCDMA B5: -2.15dBi
Adapter:	Model 1: QZ-05500AC00 Input: 100-240V 50/60Hz 1.2A Output(PD): 5.0V, 3.0A 15.0W or 9.0V, 3.0A 27.0W or 12.0V, 3.0A 36.0W or 15.0V, 3.0A 45.0W or 20.0V, 2.75A 55.0W Max (PPS): 5.0V~11.0V, 3.0A 33.0W Max (PPS): 5.0V~20.0V, 2.75A 55.0W Max Model 2: HJ-55WPD-US Input: 100-240V 50/60Hz 1.5A Output(PD): 5.0V, 3.0A 15.0W or 9.0V, 3.0A 27.0W or 12.0V, 3.0A 36.0W or 15.0V, 3.0A 45.0W or 20.0V, 2.75A 55.0W Max (PPS): 5.0V, 20.0V 2.75A 55.0W Max
Battery:	Capacity: 6000mAh Rated Voltage: 7.74V
GPRS Class:	Multi-Class12
Extreme Vol. Limits:	6V to 8.8V (Nominal 7.74V)
Extreme Temp. Tolerance:	0℃ to +40℃
Hardware version:	F253_MAIN_PCB_V1.2
Software version:	N/A

*** Note: The High Voltage 8.8V and Low Voltage 6V was declared by manufacturer, The EUT couldn't be operate normally with higher or lower voltage, the antenna information refer the manufacturer provide report, applicable only to the tested sample identified in the report.*

4 TEST CONFIGURATION OF EQUIPMENT UNDER TEST

Antenna port conducted and radiated test items were performed according to KDB 971168 D01 and ANSI C63.26 2015 Power Meas. License Digital Systems with maximum output power.

Radiated measurements were performed with rotating EUT in different three orthogonal test planes to find the maximum emission.

Radiated emissions were investigated as following frequency range:

1. 30 MHz to 10th harmonic for GSM850/WCDMA Band V.

2. 30 MHz to 10th harmonic for GSM1900 and WCDMA Band II/ WCDMA Band IV.

All modes and data rates and positions were investigated.

Test modes are chosen to be reported as the worst-case configuration below:

	TEST MODES	
BAND	RADIATED TCS	CONDUCTED TCS
GSM 850	GSM LINK GPRS/EDGE CLASS 12 LINK	GSM LINK GPRS/EDGE CLASS 12 LINK
GSM 1900	GSM LINK GPRS/EDGE CLASS 12 LINK	GSM LINK GPRS/EDGE CLASS 12 LINK
WCDMA BAND V	RMC 12.2KBPS LINK	RMC 12.2KBPS LINK
WCDMA BAND IV	RMC 12.2KBPS LINK	RMC 12.2KBPS LINK
WCDMA BAND II	RMC 12.2KBPS LINK	RMC 12.2KBPS LINK

5 MEASUREMENT INSTRUMENTS

Radiated Test equipment					
Equipment	**Manufacturer**	**Model No.**	**Serial No.**	**Cal. Date**	**Cal. Until**
EMI Test Receiver	R&S	ESU8	100372	2025.03.06	2026.03.05
Active loop Antenna	ETS	6502	00049544	2025.03.11	2028.03.10
Spectrum Analyzer	Keysight	N9010B	MY60242508	2025.03.05	2026.03.04
Trilog Broadband Antenna (30M-1G)	SCHWARZBECK	VULB 9168	2705	2024.05.17	2027.05.16
Horn Antenna(1-18G)	SCHWARZBECK	3115	10SL0060	2025.03.10	2028.03.09
Horn Antenna(18-40G)	SCHWARZBECK	BBHA 9170	685	2023.10.23	2026.10.22
Pre-amplifier(30M-1G)	EMtrace	RP01A	02019	2025.03.06	2026.03.05
Pre-amplifier(1-26.5G)	Agilent	8449B	3008A4722	2025.03.06	2026.03.05
Pre-amplifier(18-40G)	SCHWARZBECK	BBV 9721	9721-019	2024.10.21 2025.10.20	2025.10.20 2026.10.19
Wireless Communications Test Set	R&S	CMW 500	137737	2025.03.05	2026.03.04
Antenna Tower	SAEMC	BK-4AT-BS-D	SK2021093008	N.A	N.A
Temperature & Humidity	JINGCHUANG	BT-3	N.A	2025.03.10	2026.03.09
Testing Software	EMC-I_V1.4.0.3_SKET				

Conducted Test equipment					
Equipment	**Manufacturer**	**Model No.**	**Serial No.**	**Cal. Date**	**Cal. Until**
Signal Analyzer	Keysight	N9010B	MY60242508	2025.03.05	2026.03.04
Signal Analyzer	Keysight	N9020A	MY52510057	2025.03.05	2026.03.04
Signal Analyzer	R&S	FSV40-N	102245	2025.02.17	2026.02.16
Wireless Communications Test Set	R&S	CMW 500	137737	2025.03.05	2026.03.04
MXG Vector Signal Generator	Keysight	N5182B	MY59100717	2025.03.05	2026.03.04
RF Automatic Test system	MW	MW200-RFCB	MW220322LG	2025.03.06	2026.03.05
Temperature & Humidity	JINGCHUANG	BT-3	N.A	2025.03.10	2026.03.09
Temperature& Humidity test chamber	AISRY	LX-1000L	171200018	2025.07.30	2026.07.29
Attenuator	eastsheep	90db	N.A	2025.03.06	2026.03.05
Digital multimeter	MASTECH	MS8261	MBGBC83053	2025.03.05	2026.03.04
DC source	Keysight	E3634A	MY58036468	2025.03.06	2026.03.05
Testing Software	MTS8200_ V2.0.0.0_MW				

Equipment with a calibration date of “NCR” shown in this list was not used to make direct calibrated measurements.

6 TEST ITEMS

6.1 CONDUCTED OUTPUT POWER

TEST OVERVIEW

A system simulator was used to establish communication with the EUT. Its parameters were set to enforce EUT transmitting at the maximum power. The measured power in the radio frequency on the transmitter output terminals shall be reported.

TEST PROCEDURES

1. The transmitter output port was connected to the system simulator.

2. Set eut at maximum power through the system simulator.

3. Select lowest, middle, and highest channels for each band and different modulation.

4. Measure and record the power level from the system simulator.

TEST SETUP

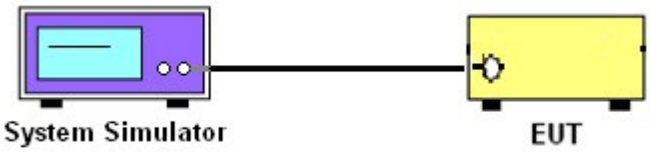

TEST RESULT

Note: The test data please reference to attachment “LGT25I189RF17 Appendix GSM/WCDMA".

6.2 PEAK TO AVERAGE RATIO

TEST OVERVIEW

According to §24.232(d), power measurements for transmissions by stations authorized under this section may be made either in accordance with a commission-approved average power technique or in compliance with paragraph (e) of this section. In both instances, equipment employed must be authorized in accordance with the provisions of §24.51. In measuring transmissions in this band using an average power technique, the peak-to-average ratio (PAR) of the transmission may not exceed 13 db.

TEST PROCEDURES

1. The testing follows FCC KDB 971168 v03r01 section.

2. The eut was connected to the peak and av system simulator& spectrum analyzer.

3. Select lowest, middle, and highest channels for each band and different modulation.

4. Set the test probe and measure average power of the spectrum analysis,

TEST SETUP

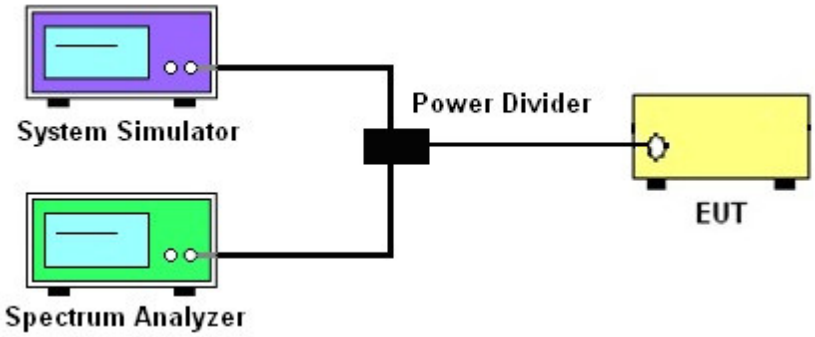

TEST RESULT

Note: The test data please reference to attachment “LGT25I189RF17 Appendix GSM/WCDMA".

6.3 TRANSMITTER RADIATED POWER (EIRP/ERP)

TEST OVERVIEW

Effective Radiated Power (ERP) and Equivalent Isotropic Radiated Power (EIRP) measurements are performed using the substitution method described in ANSI C63.26 2015 with the EUT transmitting into an integral antenna. Measurements on signals operating below 1GHz are performed using vertically polarized tuned dipole antennas. Measurements on signals operating above 1GHz are performed using vertically polarized broadband horn antennas. All measurements are performed as RMS average measurements while the EUT is operating at maximum power, and at the appropriate frequencies.

TEST PROCEDURE

1. The testing follows FCC KDB 971168 Section 5.8 and ANSI C63.26-2015 Section 5.2.
2. The transmitter was placed on a wooden turntable, and it was transmitting into a non-radiating load which was also placed on the turntable.
3. The measurement antenna was placed at a distance of 3 meters from the EUT. During the tests, the antenna height and polarization as well as EUT azimuth were varied in order to identify the maximum level of emissions from the EUT. The test was performed by placing the EUT on 3-orthogonal axis.
4. The frequency range up to tenth harmonic of the fundamental frequency was investigated.
5. Remove the EUT and replace it with substitution antenna. A signal generator was connected to the substitution antenna by a nonradiating cable. The absolute levels of the spurious emissions were measured by the substitution.
6. Effective Isotropic Radiated Power (EIRP) was measured by substitution method according to ANSI C63.26-2015. The EUT was replaced by the substitution antenna at same location, and then a known power from S.G. was applied into the dipole antenna through a Tx cable, and then recorded the maximum Analyzer reading through raised and lowered the test antenna.

EIRP=S.G Level+ Gain-Cable loss; ERP=S.G Level+ Gain-Cable loss-2.15.

TEST RESULT

Note: The test data please reference to attachment “LGT25I189RF17 Appendix GSM/WCDMA".

6.4 OCCUPIED BANDWIDTH

TEST OVERVIEW

The occupied bandwidth, that is the frequency bandwidth such that, below its lower and above its upper frequency limits, the mean powers radiated are each equal to 0.5 percent of the total mean power radiated by a given emission shall be measured.

The 26 dB emission bandwidth is defined as the frequency range between two points, one above and one below the carrier frequency, at which the spectral density of the emission is attenuated 26 dB below the maximum in-band spectral density of the modulated signal. Spectral density (power per unit bandwidth) is to be measured with a detector of resolution bandwidth equal to approximately 1.0% of the emission bandwidth.

All modes of operation were investigated and the worst-case configuration results are reported in this section.

TEST PROCEDURE

1. The signal analyzer's automatic bandwidth measurement capability was used to perform the 99% occupied bandwidth and the 26dB bandwidth. The bandwidth measurement was not influenced by any intermediate power nulls in the fundamental emission.
2. RBW = 1 – 5% of the expected OBW
3. VBW ≥ 3 x RBW
4. Detector = Peak
5. Trace mode = max hold
6. Sweep = auto couple
7. The trace was allowed to stabilize
8. If necessary, steps 2 – 7 were repeated after changing the RBW such that it would be within 1 – 5% of the 99% occupied bandwidth observed in Step 7

TEST SETUP

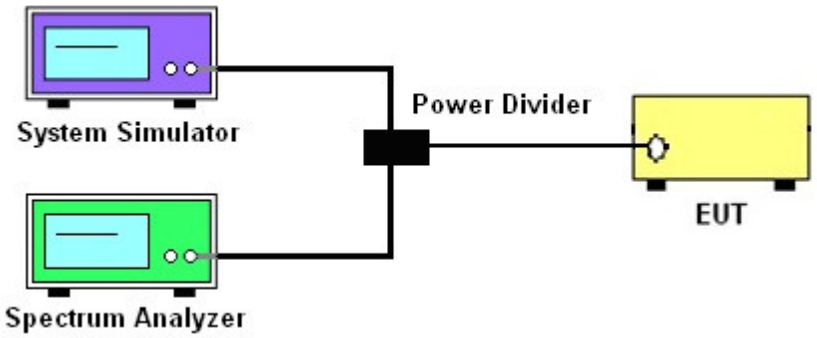

TEST RESULT

Note: The test data please reference to attachment "LGT25I189RF17 Appendix GSM/WCDMA".

6.5 FREQUENCY STABILITY

TEST OVERVIEW

Frequency stability testing is performed in accordance with the guidelines of ANSI C63.26 2015. The frequency stability of the transmitter is measured by:

a.) Temperature: The temperature is varied from -30°C to +50°C in 10°C increments using an environmental chamber.

b.) Primary Supply Voltage: The primary supply voltage is varied from 85% to 115% of the nominal value for non hand-carried battery and AC powered equipment. For hand-carried, battery-powered equipment, primary supply voltage is reduced to the battery operating end point which shall be specified by the manufacturer.

For Part 22, the frequency stability of the transmitter shall be maintained within ±0.00025% (±2.5 ppm) of the center frequency. For Part 24 the frequency stability shall be sufficient to ensure that the fundamental emission stays within the authorized frequency block.

TEST PROCEDURE

Temperature Variation

1. The testing follows FCC KDB 971168 D01 section 9.0
2. The EUT was set up in the thermal chamber and connected with the system simulator.
3. With power OFF, the temperature was decreased to -30°C and the EUT was stabilized before testing. Power was applied and the maximum change in frequency was recorded within one minute.
4. With power OFF, the temperature was raised in 10°C steps up to 50°C. The EUT was stabilized at each step for at least half an hour. Power was applied and the maximum frequency change was recorded within one minute.

Voltage Variation

1. The testing follows FCC KDB 971168 D01 Section 9.0.
2. The EUT was placed in a temperature chamber at 25±5° C and connected with the system simulator.
3. The power supply voltage to the EUT was varied from 85% to 115% of the nominal value measured at the input to the EUT.
4. The variation in frequency was measured for the worst case.

TEST SETUP

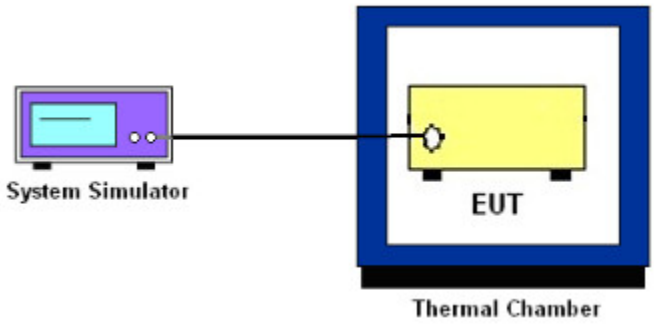

TEST RESULT

Note: The test data please reference to attachment “LGT25I189RF17 Appendix GSM/WCDMA".

6.6 SPURIOUS EMISSIONS AT ANTENNA TERMINALS

TEST OVERVIEW

The power of any emission outside of the authorized operating frequency ranges must be lower than the transmitter power (P) by a factor of at least 43 + 10 log (P) dB.

It is measured by means of a calibrated spectrum analyzer and scanned from 30 MHz up to a frequency including its 10th harmonic.

TEST PROCEDURE

1. The testing FCC KDB 971168 D01 v03r01 Section 6.0. and ANSI C63.26-2015-Section 5.7.
2. The EUT was connected to the spectrum analyzer and system simulator via a power divider.
3. The RF output of EUT was connected to the spectrum analyzer by an RF cable and attenuator. The path loss was compensated to the results for each measurement.
4. The middle channel for the highest RF power within the transmitting frequency was measured.
5. The conducted spurious emission for the whole frequency range was taken.
6. The RF fundamental frequency should be excluded against the limit line in the operating frequency band.
7. The limit line is derived from 43 + 10log(P) dB below the transmitter power P(Watts)

= P(W) - [43 + 10log(P)] (dB)

= [30 + 10log(P)] (dBm) - [43 + 10log(P)] (dB)

= -13dBm.

TEST SETUP

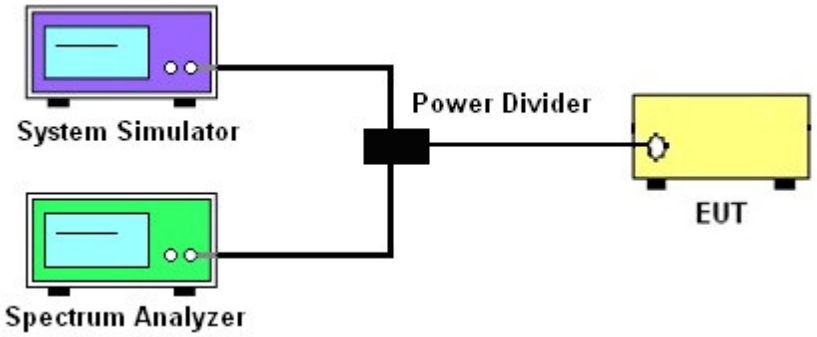

TEST RESULT

Note: Test data See APPENDIX I.

6.7 BAND EDGE

TEST OVERVIEW

All out of band emissions are measured with a spectrum analyzer connected to the antenna terminal of the EUT while the EUT is operating at maximum power, and at the appropriate frequencies. All data rates were investigated to determine the worst-case configuration. All modes of operation were investigated and the worst-case configuration results are reported in this section.

The minimum permissible attenuation level of any spurious emission is 43 + log10(P[Watts]), where P is the transmitter power in Watts.

TEST PROCEDURE

1. The testing FCC KDB 971168 D01 v03r01 Section 6.0 and ANSI C63.26-2015-Section 5.7
2. Start and stop frequency were set such that the band edge would be placed in the center of the Plot.
3. The EUT was connected to the spectrum analyzer and system simulator via a power divider.
4. The RF output of EUT was connected to the spectrum analyzer by an RF cable and attenuator.

The path loss was compensated to the results for each measurement.

5. The band edges of low and high channels for the highest RF powers were measured.
6. The RF fundamental frequency should be excluded against the limit line in the operating frequency band.
7. The limit line is derived from 43 + 10log(P) dB below the transmitter power P(Watts)

= P(W) - [43 + 10log(P)] (dB)

= [30 + 10log(P)] (dBm) - [43 + 10log(P)] (dB)

= -13dBm.

TEST SETUP

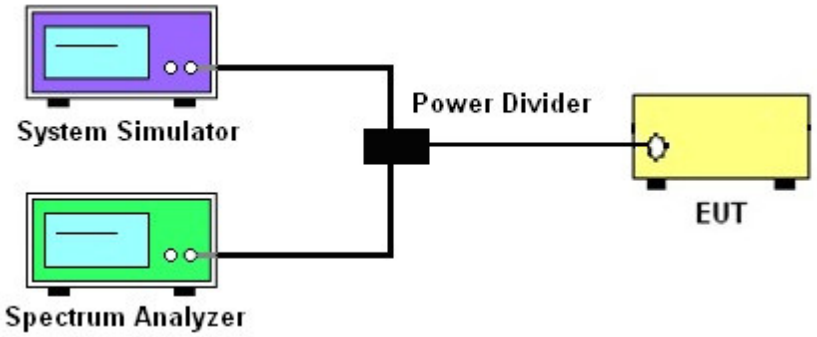

TEST RESULT

Note: The test data please reference to attachment “LGT25I189RF17 Appendix GSM/WCDMA".

6.8 FIELD STRENGTH OF SPURIOUS RADIATION MEASUREMENT

TEST OVERVIEW

Radiated spurious emissions measurements are performed using the substitution method described in ANSI C63.26-2015 with the EUT transmitting into an integral antenna. Measurements on signalsoperating below 1GHz are performed using horizontally and vertically polarized tuned dipole antennas. Measurements on signals operating above 1GHz are performed using vertically and horizontally polarizedhorn antennas. All measurements are performed as peak measurements while the EUT isoperating at maximum power and at the appropriate frequencies.

It is measured by means of a calibrated spectrum analyzer and scanned from 30 MHz up to a frequency including its 10th harmonic.

TEST PROCEDURE

1. The testing FCC KDB 971168 D01 Section 5.8 and ANSI C63.26-2015-Section 5.5.
2. RBW = 100kHz for emissions below 1GHz and 1MHz for emissions above 1GHz
3. VBW ≥ 3 x RBW
4. Span = 1.5 times the OBW
5.No. of sweep points > 2 x span/RBW
6. Detector = Peak
7. Trace mode = max hold
8. The trace was allowed to stabilize
9. Effective Isotropic Spurious Radiation was measured by substitution method according to TIA/EIA-603-D. The EUT was replaced by the substitution antenna at same location, and then a known power from S.G. was applied into the dipole antenna through a Tx cable, and then recorded the maximum Analyzer reading through raised and lowered the test antenna.

PMea=S.G Level+ Ant-Cable loss; Margin=PMea-Limit.

TEST SETUP

For radiated test from 30MHz to 1GHz

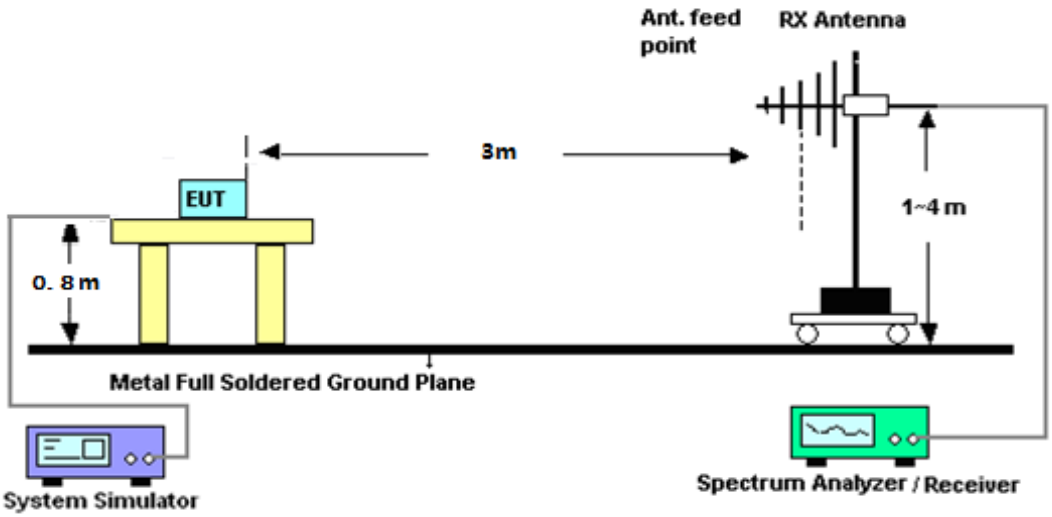

For radiated test from above 1GHz

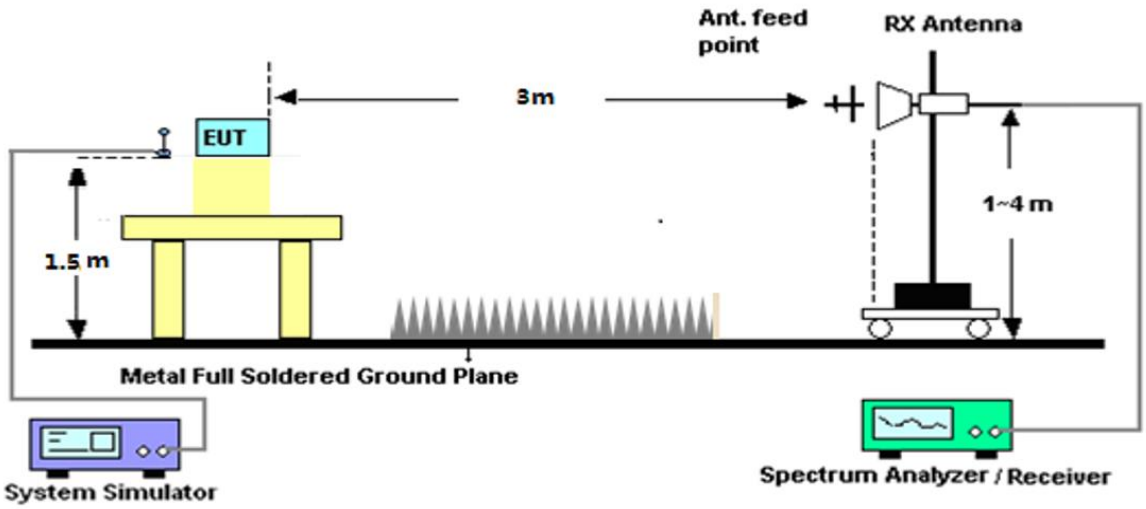

TEST RESULT

Note: Test data See APPENDIX I.

APPENDIX I. TEST DATA

RADIATED SPURIOUS EMISSION

Note: (1) Spurious emissions which are attenuated by more than 20dB below the permissible value for frequeny below 1000MHz.

(2) Test is divided into three directions, X/Y/Z. X pattern for the worst.

2G

GSM 850: (30-9000)MHz							
The Worst Test Results Channel 128/824.2 MHz							
Frequency(MHz)	S G.Lev (dBm)	Ant(dBi)	Loss	PMea (dBm)	Limit （dBm）	Margin (dBm)	Polarity
1648.03	-44.10	7.40	4.75	-41.45	-13.00	-28.45	H
2472.23	-39.89	8.20	8.39	-40.08	-13.00	-27.08	H
3296.84	-31.38	7.20	11.79	-35.97	-13.00	-22.97	H
1648.25	-44.82	7.40	4.75	-42.17	-13.00	-29.17	V
2472.46	-39.92	8.20	8.39	-40.11	-13.00	-27.11	V
3296.59	-31.24	7.20	11.79	**-35.83**	-13.00	-22.83	V
The Worst Test Results Channel 190/836.6 MHz							
Frequency(MHz)	S G.Lev (dBm)	Ant(dBi)	Loss	PMea (dBm)	Limit （dBm）	Margin (dBm)	Polarity
1673.03	-44.98	7.40	4.76	-42.34	-13.00	-29.34	H
2509.47	-39.09	8.20	8.40	-39.29	-13.00	-26.29	H
3346.06	-32.19	7.20	11.80	**-36.79**	-13.00	-23.79	H
1673.05	-44.73	7.40	4.75	-42.08	-13.00	-29.08	V
2509.92	-39.31	8.20	8.39	-39.50	-13.00	-26.50	V
3346.13	-32.42	7.20	11.82	-37.04	-13.00	-24.04	V
The Worst Test Results Channel 251/848.8 MHz							
Frequency(MHz)	S G.Lev (dBm)	Ant(dBi)	Loss	PMea (dBm)	Limit （dBm）	Margin (dBm)	Polarity
1697.45	-44.59	7.40	4.77	-41.96	-13.00	-28.96	H
2546.30	-39.18	8.20	8.50	-39.48	-13.00	-26.48	H
3395.11	-31.28	7.20	11.90	**-35.98**	-13.00	-22.98	H
1697.41	-44.97	7.40	4.77	-42.34	-13.00	-29.34	V
2546.28	-39.13	8.20	8.50	-39.43	-13.00	-26.43	V
3394.86	-32.17	7.20	11.90	-36.87	-13.00	-23.87	V

GPRS 850: (30-9000)MHz							
The Worst Test Results Channel 128/824.2 MHz							
Frequency(MHz)	S G.Lev (dBm)	Ant(dBi)	Loss	PMea (dBm)	Limit （dBm）	Margin (dBm)	Polarity
1648.20	-44.91	7.40	4.75	-42.26	-13.00	-29.26	H
2472.59	-39.63	8.20	8.39	-39.82	-13.00	-26.82	H
3296.73	-32.34	7.20	11.79	-36.93	-13.00	-23.93	H
1648.27	-44.93	7.40	4.75	-42.28	-13.00	-29.28	V
2472.56	-38.90	8.20	8.39	-39.09	-13.00	-26.09	V
3296.86	-31.77	7.20	11.79	**-36.36**	-13.00	-23.36	V
The Worst Test Results Channel 190/836.6 MHz							
Frequency(MHz)	S G.Lev (dBm)	Ant(dBi)	Loss	PMea (dBm)	Limit （dBm）	Margin (dBm)	Polarity
1673.18	-45.11	7.40	4.76	-42.47	-13.00	-29.47	H
2509.60	-39.60	8.20	8.40	-39.80	-13.00	-26.80	H
3346.39	-31.70	7.20	11.80	**-36.30**	-13.00	-23.30	H
1673.19	-44.34	7.40	4.75	-41.69	-13.00	-28.69	V
2509.46	-39.35	8.20	8.39	-39.54	-13.00	-26.54	V
3346.02	-31.78	7.20	11.82	-36.40	-13.00	-23.40	V
The Worst Test Results Channel 251/848.8 MHz							
Frequency(MHz)	S G.Lev (dBm)	Ant(dBi)	Loss	PMea (dBm)	Limit （dBm）	Margin (dBm)	Polarity
1697.19	-43.90	7.40	4.77	-41.27	-13.00	-28.27	H
2546.50	-39.91	8.20	8.50	-40.21	-13.00	-27.21	H
3395.08	-32.23	7.20	11.90	**-36.93**	-13.00	-23.93	H
1697.23	-44.74	7.40	4.77	-42.11	-13.00	-29.11	V
2546.24	-40.09	8.20	8.50	-40.39	-13.00	-27.39	V
3394.91	-32.45	7.20	11.90	-37.15	-13.00	-24.15	V

EGPRS 850: (30-9000)MHz							
The Worst Test Results Channel 128/824.2 MHz							
Frequency(MHz)	S G.Lev (dBm)	Ant(dBi)	Loss	PMea (dBm)	Limit （dBm）	Margin (dBm)	Polarity
1648.15	-43.76	7.40	4.75	-41.11	-13.00	-28.11	H
2472.46	-38.94	8.20	8.39	-39.13	-13.00	-26.13	H
3296.90	-31.81	7.20	11.79	-36.40	-13.00	-23.40	H
1648.17	-44.37	7.40	4.75	-41.72	-13.00	-28.72	V
2472.55	-39.12	8.20	8.39	-39.31	-13.00	-26.31	V
3296.63	-31.52	7.20	11.79	**-36.11**	-13.00	-23.11	V
The Worst Test Results Channel 190/836.6 MHz							
Frequency(MHz)	S G.Lev (dBm)	Ant(dBi)	Loss	PMea (dBm)	Limit （dBm）	Margin (dBm)	Polarity
1672.98	-44.51	7.40	4.76	-41.87	-13.00	-28.87	H
2509.56	-39.70	8.20	8.40	-39.90	-13.00	-26.90	H
3346.28	-32.26	7.20	11.80	-36.86	-13.00	-23.86	H
1672.91	-44.94	7.40	4.75	-42.29	-13.00	-29.29	V
2509.57	-39.21	8.20	8.39	-39.40	-13.00	-26.40	V
3346.34	-31.33	7.20	11.82	**-35.95**	-13.00	-22.95	V
The Worst Test Results Channel 251/848.8 MHz							
Frequency(MHz)	S G.Lev (dBm)	Ant(dBi)	Loss	PMea (dBm)	Limit （dBm）	Margin (dBm)	Polarity
1697.37	-44.53	7.40	4.77	-41.90	-13.00	-28.90	H
2546.44	-38.71	8.20	8.50	-39.01	-13.00	-26.01	H
3395.06	-32.03	7.20	11.90	-36.73	-13.00	-23.73	H
1697.37	-44.50	7.40	4.77	-41.87	-13.00	-28.87	V
2546.51	-39.67	8.20	8.50	-39.97	-13.00	-26.97	V
3395.14	-31.95	7.20	11.90	**-36.65**	-13.00	-23.65	V

PCS 1900: (30-20000)MHz							
The Worst Test Results for Channel 512/1850.2MHz							
Frequency(MHz)	S G.Lev (dBm)	Ant(dBi)	Loss	PMea (dBm)	Limit （dBm）	Margin (dBm)	Polarity
3700.08	-32.47	7.00	12.93	-38.40	-13.00	-25.40	H
5550.19	-26.04	8.40	17.11	-34.75	-13.00	-21.75	H
7400.63	-20.92	8.30	22.20	-34.82	-13.00	-21.82	H
3700.14	-31.12	7.00	12.93	-37.05	-13.00	-24.05	V
5550.58	-27.15	8.40	17.11	-35.86	-13.00	-22.86	V
7400.54	-20.64	8.30	22.20	**-34.54**	-13.00	-21.54	V
The Worst Test Results for Channel 661/1880.0MHz							
Frequency(MHz)	S G.Lev (dBm)	Ant(dBi)	Loss	PMea (dBm)	Limit （dBm）	Margin (dBm)	Polarity
3760.19	-31.85	7.00	12.93	-37.78	-13.00	-24.78	H
5640.07	-26.68	8.40	17.11	-35.39	-13.00	-22.39	H
7520.15	-20.99	8.30	22.20	**-34.89**	-13.00	-21.89	H
3760.07	-32.00	7.00	12.93	-37.93	-13.00	-24.93	V
5640.15	-26.26	8.40	17.11	-34.97	-13.00	-21.97	V
7519.81	-20.99	8.30	22.20	**-34.89**	-13.00	-21.89	V
The Worst Test Results for Channel 810/1909.8MHz							
Frequency(MHz)	S G.Lev (dBm)	Ant(dBi)	Loss	PMea (dBm)	Limit （dBm）	Margin (dBm)	Polarity
3819.48	-31.25	7.00	12.93	-37.18	-13.00	-24.18	H
5729.46	-26.20	8.40	17.11	-34.91	-13.00	-21.91	H
7639.21	-20.72	8.30	22.20	-34.62	-13.00	-21.62	H
3819.53	-31.80	7.00	12.93	-37.73	-13.00	-24.73	V
5729.45	-26.77	8.40	17.11	-35.48	-13.00	-22.48	V
7639.19	-19.71	8.30	22.20	**-33.61**	-13.00	-20.61	V

GPRS1900: (30-20000)MHz							
The Worst Test Results for Channel 512/1850.2MHz							
Frequency(MHz)	S G.Lev (dBm)	Ant(dBi)	Loss	PMea (dBm)	Limit （dBm）	Margin (dBm)	Polarity
3700.22	-32.02	7.00	12.93	-37.95	-13.00	-24.95	H
5550.36	-26.24	8.40	17.11	-34.95	-13.00	-21.95	H
7400.67	-20.77	8.30	22.20	-34.67	-13.00	-21.67	H
3700.23	-31.34	7.00	12.93	-37.27	-13.00	-24.27	V
5550.32	-26.08	8.40	17.11	-34.79	-13.00	-21.79	V
7400.58	-19.80	8.30	22.20	**-33.70**	-13.00	-20.70	V
The Worst Test Results for Channel 661/1880.0MHz							
Frequency(MHz)	S G.Lev (dBm)	Ant(dBi)	Loss	PMea (dBm)	Limit （dBm）	Margin (dBm)	Polarity
3759.98	-31.17	7.00	12.93	-37.10	-13.00	-24.10	H
5639.85	-26.63	8.40	17.11	-35.34	-13.00	-22.34	H
7519.88	-20.76	8.30	22.20	**-34.66**	-13.00	-21.66	H
3760.33	-32.10	7.00	12.93	-38.03	-13.00	-25.03	V
5640.32	-26.85	8.40	17.11	-35.56	-13.00	-22.56	V
7520.12	-21.03	8.30	22.20	-34.93	-13.00	-21.93	V
The Worst Test Results for Channel 810/1909.8MHz							
Frequency(MHz)	S G.Lev (dBm)	Ant(dBi)	Loss	PMea (dBm)	Limit （dBm）	Margin (dBm)	Polarity
3819.63	-31.31	7.00	12.93	-37.24	-13.00	-24.24	H
5729.40	-25.72	8.40	17.11	**-34.43**	-13.00	-21.43	H
7638.95	-20.90	8.30	22.20	-34.80	-13.00	-21.80	H
3819.36	-31.70	7.00	12.93	-37.63	-13.00	-24.63	V
5729.51	-26.27	8.40	17.11	-34.98	-13.00	-21.98	V
7639.34	-20.77	8.30	22.20	-34.67	-13.00	-21.67	V

EGPRS 1900: (30-20000)MHz							
The Worst Test Results for Channel 512/1850.2MHz							
Frequency(MHz)	S G.Lev (dBm)	Ant(dBi)	Loss	PMea (dBm)	Limit （dBm）	Margin (dBm)	Polarity
3700.14	-32.08	7.00	12.93	-38.01	-13.00	-25.01	H
5550.46	-26.87	8.40	17.11	-35.58	-13.00	-22.58	H
7400.59	-19.88	8.30	22.20	**-33.78**	-13.00	-20.78	H
3700.18	-31.94	7.00	12.93	-37.87	-13.00	-24.87	V
5550.40	-26.80	8.40	17.11	-35.51	-13.00	-22.51	V
7400.90	-20.66	8.30	22.20	-34.56	-13.00	-21.56	V
The Worst Test Results for Channel 661/1880.0MHz							
Frequency(MHz)	S G.Lev (dBm)	Ant(dBi)	Loss	PMea (dBm)	Limit （dBm）	Margin (dBm)	Polarity
3760.07	-31.31	7.00	12.93	-37.24	-13.00	-24.24	H
5640.02	-26.44	8.40	17.11	-35.15	-13.00	-22.15	H
7520.05	-19.92	8.30	22.20	**-33.82**	-13.00	-20.82	H
3760.24	-31.44	7.00	12.93	-37.37	-13.00	-24.37	V
5640.28	-26.88	8.40	17.11	-35.59	-13.00	-22.59	V
7520.23	-20.36	8.30	22.20	-34.26	-13.00	-21.26	V
The Worst Test Results for Channel 810/1909.8MHz							
Frequency(MHz)	S G.Lev (dBm)	Ant(dBi)	Loss	PMea (dBm)	Limit （dBm）	Margin (dBm)	Polarity
3819.35	-32.48	7.00	12.93	-38.41	-13.00	-25.41	H
5729.10	-27.09	8.40	17.11	-35.80	-13.00	-22.80	H
7639.00	-20.71	8.30	22.20	-34.61	-13.00	-21.61	H
3819.45	-31.97	7.00	12.93	-37.90	-13.00	-24.90	V
5729.08	-26.17	8.40	17.11	-34.88	-13.00	-21.88	V
7639.16	-20.08	8.30	22.20	**-33.98**	-13.00	-20.98	V

3G

WCDMA Band 2: (30-20000)MHz							
The Worst Test Results for Channel 9262/1852.4MHz							
Frequency(MHz)	S G.Lev (dBm)	Ant(dBi)	Loss	PMea (dBm)	Limit （dBm）	Margin (dBm)	Polarity
3704.33	-32.75	7.00	12.93	-38.68	-13.00	-25.68	H
5557.53	-28.35	8.20	17.11	-37.26	-13.00	-24.26	H
7409.72	-22.66	8.10	22.20	-36.76	-13.00	-23.76	H
3704.32	-33.16	7.00	12.93	-39.09	-13.00	-26.09	V
5557.61	-27.48	8.20	17.11	**-36.39**	-13.00	-23.39	V
7409.63	-22.94	8.10	22.20	-37.04	-13.00	-24.04	V
The Worst Test Results for Channel 9400/1880MHz							
Frequency(MHz)	S G.Lev (dBm)	Ant(dBi)	Loss	PMea (dBm)	Limit （dBm）	Margin (dBm)	Polarity
3759.77	-32.79	7.00	12.93	-38.72	-13.00	-25.72	H
5640.10	-27.76	8.20	17.11	-36.67	-13.00	-23.67	H
7519.87	-22.73	8.10	22.20	-36.83	-13.00	-23.83	H
3760.17	-32.81	7.00	12.93	-38.74	-13.00	-25.74	V
5639.88	-27.07	8.20	17.11	**-35.98**	-13.00	-22.98	V
7520.31	-22.48	8.10	22.20	-36.58	-13.00	-23.58	V
The Worst Test Results for Channel 9538/1907.6MHz							
Frequency(MHz)	S G.Lev (dBm)	Ant(dBi)	Loss	PMea (dBm)	Limit （dBm）	Margin (dBm)	Polarity
3815.62	-32.88	7.00	12.93	-38.81	-13.00	-25.81	H
5722.24	-27.61	8.20	17.11	-36.52	-13.00	-23.52	H
7630.09	-22.91	8.10	22.20	-37.01	-13.00	-24.01	H
3815.46	-32.88	7.00	12.93	-38.81	-13.00	-25.81	V
5722.04	-28.05	8.20	17.11	-36.96	-13.00	-23.96	V
7630.16	-22.07	8.10	22.20	**-36.17**	-13.00	-23.17	V

HSUPA Band 2: (30-20000)MHz							
The Worst Test Results for Channel 9262/1852.4MHz							
Frequency(MHz)	S G.Lev (dBm)	Ant(dBi)	Loss	PMea (dBm)	Limit （dBm）	Margin (dBm)	Polarity
3704.42	-32.39	7.00	12.93	-38.32	-13.00	-25.32	H
5557.65	-28.30	8.20	17.11	-37.21	-13.00	-24.21	H
7409.49	-22.55	8.10	22.20	-36.65	-13.00	-23.65	H
3704.10	-32.43	7.00	12.93	-38.36	-13.00	-25.36	V
5557.55	-28.24	8.20	17.11	-37.15	-13.00	-24.15	V
7409.90	-22.49	8.10	22.20	**-36.59**	-13.00	-23.59	V
The Worst Test Results for Channel 9400/1880MHz							
Frequency(MHz)	S G.Lev (dBm)	Ant(dBi)	Loss	PMea (dBm)	Limit （dBm）	Margin (dBm)	Polarity
3760.14	-32.60	7.00	12.93	-38.53	-13.00	-25.53	H
5639.94	-27.42	8.20	17.11	**-36.33**	-13.00	-23.33	H
7520.00	-23.38	8.10	22.20	-37.48	-13.00	-24.48	H
3760.09	-32.34	7.00	12.93	-38.27	-13.00	-25.27	V
5640.22	-28.10	8.20	17.11	-37.01	-13.00	-24.01	V
7520.15	-23.33	8.10	22.20	-37.43	-13.00	-24.43	V
The Worst Test Results for Channel 9538/1907.6MHz							
Frequency(MHz)	S G.Lev (dBm)	Ant(dBi)	Loss	PMea (dBm)	Limit （dBm）	Margin (dBm)	Polarity
3815.34	-33.23	7.00	12.93	-39.16	-13.00	-26.16	H
5722.08	-28.06	8.20	17.11	-36.97	-13.00	-23.97	H
7630.23	-22.59	8.10	22.20	-36.69	-13.00	-23.69	H
3815.48	-32.51	7.00	12.93	-38.44	-13.00	-25.44	V
5722.24	-28.08	8.20	17.11	-36.99	-13.00	-23.99	V
7630.13	-22.20	8.10	22.20	**-36.30**	-13.00	-23.30	V

HSDPA Band 2: (30-20000)MHz							
The Worst Test Results for Channel 9262/1852.4MHz							
Frequency(MHz)	S G.Lev (dBm)	Ant(dBi)	Loss	PMea (dBm)	Limit （dBm）	Margin (dBm)	Polarity
3704.26	-32.31	7.00	12.93	-38.24	-13.00	-25.24	H
5557.45	-27.75	8.20	17.11	-36.66	-13.00	-23.66	H
7409.53	-22.08	8.10	22.20	**-36.18**	-13.00	-23.18	H
3704.13	-32.95	7.00	12.93	-38.88	-13.00	-25.88	V
5557.49	-27.85	8.20	17.11	-36.76	-13.00	-23.76	V
7409.68	-23.07	8.10	22.20	-37.17	-13.00	-24.17	V
The Worst Test Results for Channel 9400/1880MHz							
Frequency(MHz)	S G.Lev (dBm)	Ant(dBi)	Loss	PMea (dBm)	Limit （dBm）	Margin (dBm)	Polarity
3759.87	-32.29	7.00	12.93	-38.22	-13.00	-25.22	H
5639.97	-28.48	8.20	17.11	-37.39	-13.00	-24.39	H
7519.80	-22.69	8.10	22.20	-36.79	-13.00	-23.79	H
3760.14	-32.79	7.00	12.93	-38.72	-13.00	-25.72	V
5640.25	-27.13	8.20	17.11	**-36.04**	-13.00	-23.04	V
7519.87	-22.70	8.10	22.20	-36.80	-13.00	-23.80	V
The Worst Test Results for Channel 9538/1907.6MHz							
Frequency(MHz)	S G.Lev (dBm)	Ant(dBi)	Loss	PMea (dBm)	Limit （dBm）	Margin (dBm)	Polarity
3815.58	-33.07	7.00	12.93	-39.00	-13.00	-26.00	H
5722.21	-27.11	8.20	17.11	**-36.02**	-13.00	-23.02	H
7629.88	-23.32	8.10	22.20	-37.42	-13.00	-24.42	H
3815.67	-32.05	7.00	12.93	-37.98	-13.00	-24.98	V
5722.05	-27.44	8.20	17.11	-36.35	-13.00	-23.35	V
7629.98	-23.01	8.10	22.20	-37.11	-13.00	-24.11	V

WCDMA Band 4: (30-18000)MHz							
The Worst Test Results for Channel 1313/1712.6MHz							
Frequency(MHz)	S G.Lev (dBm)	Ant(dBi)	Loss	PMea (dBm)	Limit （dBm）	Margin (dBm)	Polarity
3425.11	-33.49	7.20	12.05	-38.34	-13.00	-25.34	H
5137.71	-27.73	7.90	16.27	**-36.10**	-13.00	-23.10	H
6849.97	-24.30	8.30	20.13	-36.13	-13.00	-23.13	H
3424.88	-33.04	7.20	12.05	-37.89	-13.00	-24.89	V
5137.54	-27.91	7.90	16.27	-36.28	-13.00	-23.28	V
6850.12	-24.51	8.30	20.13	-36.34	-13.00	-23.34	V
The Worst Test Results for Channel 1450/1740.0MHz							
Frequency(MHz)	S G.Lev (dBm)	Ant(dBi)	Loss	PMea (dBm)	Limit （dBm）	Margin (dBm)	Polarity
3479.84	-32.88	7.20	12.05	-37.73	-13.00	-24.73	H
5219.94	-27.96	7.90	16.27	-36.33	-13.00	-23.33	H
6959.89	-24.29	8.30	20.13	**-36.12**	-13.00	-23.12	H
3479.50	-32.30	7.20	12.05	-37.15	-13.00	-24.15	V
5219.59	-27.95	7.90	16.27	-36.32	-13.00	-23.32	V
6959.53	-25.23	8.30	20.13	-37.06	-13.00	-24.06	V
The Worst Test Results for Channel 1512/1752.4MHz							
Frequency(MHz)	S G.Lev (dBm)	Ant(dBi)	Loss	PMea (dBm)	Limit （dBm）	Margin (dBm)	Polarity
3504.43	-32.37	7.20	12.05	-37.22	-13.00	-24.22	H
5257.13	-27.33	7.90	16.27	-35.70	-13.00	-22.70	H
7009.59	-25.31	8.30	20.13	-37.14	-13.00	-24.14	H
3504.55	-33.23	7.20	12.05	-38.08	-13.00	-25.08	V
5256.77	-27.20	7.90	16.27	**-35.57**	-13.00	-22.57	V
7009.42	-25.23	8.30	20.13	-37.06	-13.00	-24.06	V

HSUPA Band 4: (30-18000)MHz							
The Worst Test Results for Channel 1313/1712.6MHz							
Frequency(MHz)	S G.Lev (dBm)	Ant(dBi)	Loss	PMea (dBm)	Limit （dBm）	Margin (dBm)	Polarity
3424.77	-32.76	7.20	12.05	-37.61	-13.00	-24.61	H
5137.66	-27.78	7.90	16.27	**-36.15**	-13.00	-23.15	H
6850.25	-25.17	8.30	20.13	-37.00	-13.00	-24.00	H
3424.82	-33.45	7.20	12.05	-38.30	-13.00	-25.30	V
5137.53	-28.40	7.90	16.27	-36.77	-13.00	-23.77	V
6850.37	-24.66	8.30	20.13	-36.49	-13.00	-23.49	V
The Worst Test Results for Channel 1450/1740.0MHz							
Frequency(MHz)	S G.Lev (dBm)	Ant(dBi)	Loss	PMea (dBm)	Limit （dBm）	Margin (dBm)	Polarity
3479.80	-32.93	7.20	12.05	-37.78	-13.00	-24.78	H
5219.67	-27.28	7.90	16.27	**-35.65**	-13.00	-22.65	H
6959.86	-24.33	8.30	20.13	-36.16	-13.00	-23.16	H
3479.78	-32.32	7.20	12.05	-37.17	-13.00	-24.17	V
5219.81	-27.39	7.90	16.27	-35.76	-13.00	-22.76	V
6959.84	-25.38	8.30	20.13	-37.21	-13.00	-24.21	V
The Worst Test Results for Channel 1512/1752.4MHz							
Frequency(MHz)	S G.Lev (dBm)	Ant(dBi)	Loss	PMea (dBm)	Limit （dBm）	Margin (dBm)	Polarity
3504.46	-33.30	7.20	12.05	-38.15	-13.00	-25.15	H
5257.13	-27.67	7.90	16.27	-36.04	-13.00	-23.04	H
7009.23	-25.13	8.30	20.13	-36.96	-13.00	-23.96	H
3504.50	-33.10	7.20	12.05	-37.95	-13.00	-24.95	V
5257.04	-27.50	7.90	16.27	**-35.87**	-13.00	-22.87	V
7009.21	-24.41	8.30	20.13	-36.24	-13.00	-23.24	V

HSDPA Band 4: (30-18000)MHz							
The Worst Test Results for Channel 1313/1712.6MHz							
Frequency(MHz)	S G.Lev (dBm)	Ant(dBi)	Loss	PMea (dBm)	Limit （dBm）	Margin (dBm)	Polarity
3424.77	-33.30	7.20	12.05	-38.15	-13.00	-25.15	H
5137.36	-28.09	7.90	16.27	-36.46	-13.00	-23.46	H
6849.97	-25.39	8.30	20.13	-37.22	-13.00	-24.22	H
3425.07	-33.07	7.20	12.05	-37.92	-13.00	-24.92	V
5137.53	-27.74	7.90	16.27	**-36.11**	-13.00	-23.11	V
6850.17	-24.28	8.30	20.13	**-36.11**	-13.00	-23.11	V
The Worst Test Results for Channel 1450/1740.0MHz							
Frequency(MHz)	S G.Lev (dBm)	Ant(dBi)	Loss	PMea (dBm)	Limit （dBm）	Margin (dBm)	Polarity
3479.80	-32.55	7.20	12.05	-37.40	-13.00	-24.40	H
5219.74	-28.47	7.90	16.27	-36.84	-13.00	-23.84	H
6959.81	-24.05	8.30	20.13	-35.88	-13.00	-22.88	H
3479.59	-32.76	7.20	12.05	-37.61	-13.00	-24.61	V
5219.83	-27.27	7.90	16.27	**-35.64**	-13.00	-22.64	V
6959.88	-25.47	8.30	20.13	-37.30	-13.00	-24.30	V
The Worst Test Results for Channel 1512/1752.4MHz							
Frequency(MHz)	S G.Lev (dBm)	Ant(dBi)	Loss	PMea (dBm)	Limit （dBm）	Margin (dBm)	Polarity
3504.71	-32.72	7.20	12.05	-37.57	-13.00	-24.57	H
5257.03	-27.41	7.90	16.27	**-35.78**	-13.00	-22.78	H
7009.16	-25.25	8.30	20.13	-37.08	-13.00	-24.08	H
3504.63	-33.08	7.20	12.05	-37.93	-13.00	-24.93	V
5257.09	-28.01	7.90	16.27	-36.38	-13.00	-23.38	V
7009.34	-25.05	8.30	20.13	-36.88	-13.00	-23.88	V

WCDMA Band 5: (30-9000)MHz							
The wost testresults channel 4132/826.4MHz							
Frequency(MHz)	S G.Lev (dBm)	Ant(dBi)	Loss	PMea (dBm)	Limit （dBm）	Margin (dBm)	Polarity
1652.15	-39.24	7.40	4.75	-36.59	-13.00	-23.59	H
2479.28	-33.95	8.30	8.39	-34.04	-13.00	-21.04	H
3305.48	-29.20	7.20	11.79	-33.79	-13.00	-20.79	H
1652.06	-39.26	7.40	4.75	-36.61	-13.00	-23.61	V
2479.68	-33.24	8.30	8.39	**-33.33**	-13.00	-20.33	V
3305.82	-30.23	7.20	11.79	-34.82	-13.00	-21.82	V
The Worst Test Results Channel 4183/836.6MHz							
Frequency(MHz)	S G.Lev (dBm)	Ant(dBi)	Loss	PMea (dBm)	Limit （dBm）	Margin (dBm)	Polarity
1673.12	-40.27	7.40	4.75	-37.62	-13.00	-24.62	H
2509.43	-33.60	8.30	8.39	-33.69	-13.00	-20.69	H
3346.06	-30.40	7.20	11.79	-34.99	-13.00	-21.99	H
1673.14	-39.13	7.40	4.75	-36.48	-13.00	-23.48	V
2509.68	-34.37	8.30	8.39	-34.46	-13.00	-21.46	V
3346.18	-29.02	7.20	11.79	**-33.61**	-13.00	-20.61	V
The Worst Test Results Channel 4233/846.6MHz							
Frequency(MHz)	S G.Lev (dBm)	Ant(dBi)	Loss	PMea (dBm)	Limit （dBm）	Margin (dBm)	Polarity
1693.26	-40.03	7.40	4.75	-37.38	-13.00	-24.38	H
2539.53	-33.29	8.30	8.39	-33.38	-13.00	-20.38	H
3386.15	-29.65	7.20	11.79	-34.24	-13.00	-21.24	H
1693.31	-39.63	7.40	4.75	-36.98	-13.00	-23.98	V
2539.45	-33.04	8.30	8.39	**-33.13**	-13.00	-20.13	V
3386.28	-29.83	7.20	11.79	-34.42	-13.00	-21.42	V

HSUPA Band 5: (30-9000)MHz							
The wost testresults channel 4132/826.4MHz							
Frequency(MHz)	S G.Lev (dBm)	Ant(dBi)	Loss	PMea (dBm)	Limit （dBm）	Margin (dBm)	Polarity
1652.29	-39.95	7.40	4.75	-37.30	-13.00	-24.30	H
2479.26	-34.25	8.30	8.39	-34.34	-13.00	-21.34	H
3305.79	-30.08	7.20	11.79	-34.67	-13.00	-21.67	H
1652.42	-40.11	7.40	4.75	-37.46	-13.00	-24.46	V
2479.66	-34.42	8.30	8.39	-34.51	-13.00	-21.51	V
3305.69	-29.65	7.20	11.79	**-34.24**	-13.00	-21.24	V
The Worst Test Results Channel 4183/836.6MHz							
Frequency(MHz)	S G.Lev (dBm)	Ant(dBi)	Loss	PMea (dBm)	Limit （dBm）	Margin (dBm)	Polarity
1673.18	-40.03	7.40	4.75	-37.38	-13.00	-24.38	H
2509.45	-33.69	8.30	8.39	-33.78	-13.00	-20.78	H
3346.23	-29.55	7.20	11.79	-34.14	-13.00	-21.14	H
1673.02	-40.47	7.40	4.75	-37.82	-13.00	-24.82	V
2509.50	-33.18	8.30	8.39	**-33.27**	-13.00	-20.27	V
3346.10	-30.48	7.20	11.79	-35.07	-13.00	-22.07	V
The Worst Test Results Channel 4233/846.6MHz							
Frequency(MHz)	S G.Lev (dBm)	Ant(dBi)	Loss	PMea (dBm)	Limit （dBm）	Margin (dBm)	Polarity
1693.65	-40.43	7.40	4.75	-37.78	-13.00	-24.78	H
2539.32	-34.01	8.30	8.39	-34.10	-13.00	-21.10	H
3385.93	-30.37	7.20	11.79	-34.96	-13.00	-21.96	H
1693.26	-39.60	7.40	4.75	-36.95	-13.00	-23.95	V
2539.39	-33.07	8.30	8.39	**-33.16**	-13.00	-20.16	V
3386.06	-29.49	7.20	11.79	-34.08	-13.00	-21.08	V

HSDPA Band 5: (30-9000)MHz							
The wost testresults channel 4132/826.4MHz							
Frequency(MHz)	S G.Lev (dBm)	Ant(dBi)	Loss	PMea (dBm)	Limit （dBm）	Margin (dBm)	Polarity
1652.33	-39.58	7.40	4.75	-36.93	-13.00	-23.93	H
2479.66	-33.61	8.30	8.39	**-33.70**	-13.00	-20.70	H
3305.56	-30.26	7.20	11.79	-34.85	-13.00	-21.85	H
1652.31	-39.53	7.40	4.75	-36.88	-13.00	-23.88	V
2479.49	-34.38	8.30	8.39	-34.47	-13.00	-21.47	V
3305.68	-29.86	7.20	11.79	-34.45	-13.00	-21.45	V
The Worst Test Results Channel 4183/836.6MHz							
Frequency(MHz)	S G.Lev (dBm)	Ant(dBi)	Loss	PMea (dBm)	Limit （dBm）	Margin (dBm)	Polarity
1673.01	-39.20	7.40	4.75	-36.55	-13.00	-23.55	H
2509.78	-33.70	8.30	8.39	**-33.79**	-13.00	-20.79	H
3346.17	-29.80	7.20	11.79	-34.39	-13.00	-21.39	H
1673.08	-40.23	7.40	4.75	-37.58	-13.00	-24.58	V
2509.78	-34.43	8.30	8.39	-34.52	-13.00	-21.52	V
3346.41	-29.28	7.20	11.79	-33.87	-13.00	-20.87	V
The Worst Test Results Channel 4233/846.6MHz							
Frequency(MHz)	S G.Lev (dBm)	Ant(dBi)	Loss	PMea (dBm)	Limit （dBm）	Margin (dBm)	Polarity
1693.46	-40.46	7.40	4.75	-37.81	-13.00	-24.81	H
2539.34	-34.13	8.30	8.39	-34.22	-13.00	-21.22	H
3386.26	-29.44	7.20	11.79	**-34.03**	-13.00	-21.03	H
1693.40	-39.55	7.40	4.75	-36.90	-13.00	-23.90	V
2539.16	-34.36	8.30	8.39	-34.45	-13.00	-21.45	V
3385.88	-29.84	7.20	11.79	-34.43	-13.00	-21.43	V

APPENDIX II- PHOTOS OF TEST SETUP

Note: Please see the attached RF_Test Setup photos for FCC ID.

※※※※※END OF THE REPORT※※※※※