Mounting the Gimbal and Camera

Press the Gimbal Detachment button to remove the cover.

Align the white and red dots and insert the gimbal.

Rotate the gimbal lock to the locked position.

- After installation, make sure that the gimbal lock is locked in place.
- Make sure to press down the Gimbal Detachment button when rotating the gimbal lock to remove the gimbal and camera. The gimbal lock should be fully rotated when removing the gimbal for the next installation.

Mounting the Flight Batteries / Checking the Battery Level

Insert a pair of batteries.

Press the battery level button once to check the battery level.

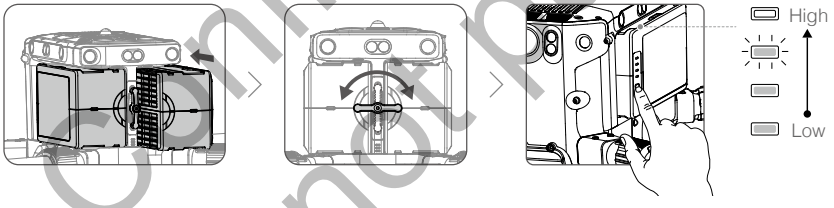

Turning On the Aircraft

Turn on / off: Press the power button on the aircraft, within 3 seconds press again and hold to turn on / off the aircraft, with the power indicator solid on.

Link: Press and hold the aircraft's power button at least five seconds to link the aircraft and Secure Controller. The power indicator will blink during linking.

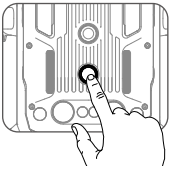

- If for any unforeseeable circumstances, that only one battery is available during flight, land the aircraft immediately and replace the batteries as soon as possible.
- The payload SDK and onboard SDK ports have built-in temperature sensors. If the device temperature is too high due to too large payload power, the aircraft will automatically power off the payload for protection.
- Make sure to use the included batteries. DO NOT use any other type of batteries.

Confidential
Do not publish

Aircraft Diagram

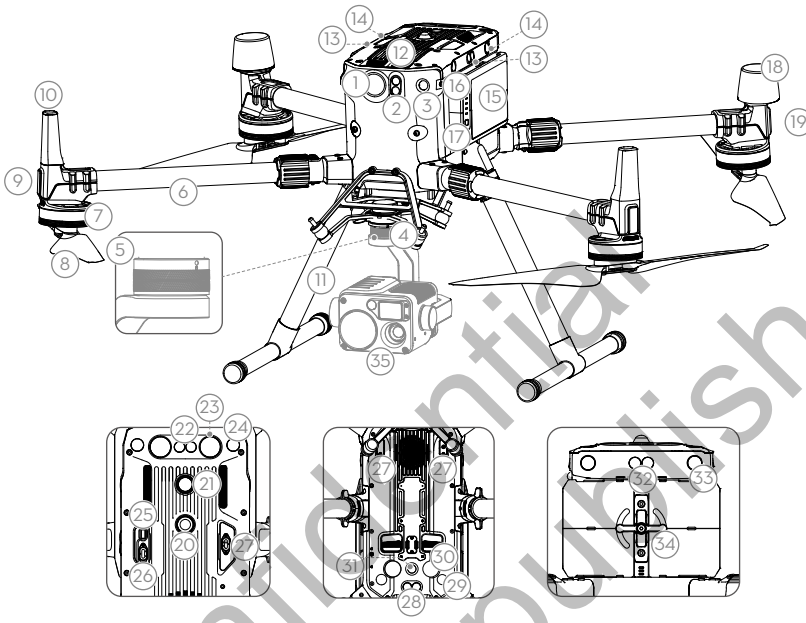

1. FPV Camera
2. Forward Infrared Sensing System
3. Forward camera sensing System
4. Gimbal Connector
5. Gimbal Detachment Button
6. Frame Arms
7. Motors
8. Propellers
9. ESC LEDs
10. Transmission Antennas
11. Landing Gears
12. Air Filter
13. Left and Right Infrared Sensing System
14. Left and Right camera sensing System
15. Flight Batteries
16. Battery Level Indicators
17. Battery Level Button
18. Antennas
19. Aircraft Status Indicators
20. Upward Beacon
21. Power Button / Indicator
22. Upward Infrared Sensing System
23. Top Auxiliary Light
24. Upward camera sensing System
25. Update Port
26. SDK Port
27. SDK Port*
28. Downward Infrared Sensing System
29. Downward camera sensing System
30. Bottom Auxiliary Light
31. Downward Beacon
32. Backward Infrared Sensing System
33. Backward camera sensing System
34. Battery Locker
35. Gimbal and Camera

* The two SDK ports on the bottom of the aircraft also serve as 1st gimbal port and 2nd gimbal port. Please note that the single downward gimbal must be connected to 1st gimbal port.

Confidential
Do not publish

Remote Controller Diagram

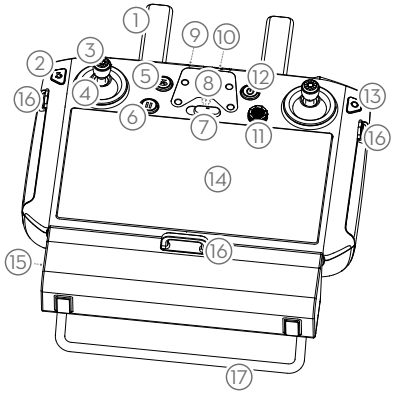

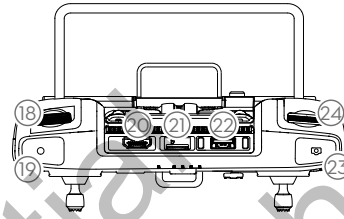

1. Antennas
2. Back Button / Function Button
   Press once to return to the previous page and press twice to go back to the homepage. Hold to view a guide to using button combinations. Refer to the Button Combinations section for more information.
3. Control Sticks
4. Stick Covers
5. RTH Button
6. Flight Pause Button
7. Flight Mode Switch
8. Position for Mounting Bracket (with built-in GPS module under it)
9. Status LED
10. Battery Level LEDs
11. 5D Button
    The default configuration is listed below. The functions can be set in app.
    Up: Camera zoom in
    Down: Camera zoom out
    Left: Decrease EV value
    Right: Increase EV value
    Go to Settings > Control Stick Navigation to enable this function.
12. Power Button
13. Confirm Button
14. Touch Screen
15. Charging Port (USB-C)
16. Lanyard Hooks
17. Handle
18. Gimbal Pitch Control Dial
19. Record Button
20. HDMI Port
21. microSD Card Slot
22. USB-A Port
    Use to connect external devices, or connect to your PC for firmware update.
23. Focus / Shutter Button
    Half press to focus, and then press to take a photo.

Confidential
Do not publish

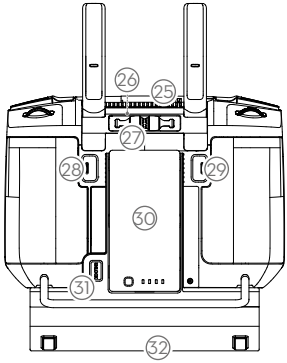

24. Gimbal Pan Control Dial
25. Air Vent
26. Sticks Storage Slot
27. Spare Sticks
28. Customizable Button C2
29. Customizable Button C1
30. Battery
31. Battery Release Button
32. Dongle Compartment Cover

Confidential
Do not publish

Aircraft

This section describes the features of the Flight Controller, camera sensing System, and the Flight Battery.

Confidential
Do not publish

Aircraft

Profile

The Explore2 aircraft includes a flight controller, a communication system, camera sensing systems, a propulsion system and a Flight Battery. This section describes the functions of these components.

Flight Mode

The following flight modes are available for the aircraft:

P-mode (Positioning) :
P-mode works best when the GNSS signal is strong. The aircraft utilizes the GNSS module and camera sensing Systems to locate itself, automatically stabilize, and navigate between obstacles. When the obstacle sensing is enabled and lighting conditions are sufficient, the maximum flight attitude angle is 25°. When the GNSS signal is weak and lighting conditions are too dark for the camera sensing Systems, the aircraft will only use its barometer for positioning to control altitude.

S-mode (Sport):
The aircraft uses GNSS for positioning. Aircraft responses are optimized for agility and speed making it more responsive to stick movements. As obstacle avoidance functions are disabled, the aircraft will not be able to sense and avoid obstacles when in Sport Mode. Only the vision positioning functions are available.

T-mode (Tripod):
T-mode is based on P-mode and the flight speed is limited, which makes the aircraft more stable during shooting.

A-mode (Attitude):
When neither the GNSS nor the camera sensing Systems are available, only the aircraft barometer is used for positioning to control the altitude.

- The obstacle avoidance function is disabled in S-mode (Sport), which means the aircraft will not be able to automatically avoid obstacles in its flight path. Be vigilant and stay clear of nearby obstacles.
- The aircraft's maximum speed and braking distance are significantly increased in S-mode (Sport). A minimum braking distance of 164 feet (50 meters) is required in windless conditions. The aircraft's responsiveness is significantly increased in S-mode (Sport), which means a small stick movement on the remote controller will translate into a large travel distance of the aircraft. Be vigilant and maintain adequate maneuvering space during flight.

Use the Flight Mode switch on the remote controller to select aircraft flight modes.

Attitude Mode Warning
DO NOT switch from P-mode to either S-mode or T-mode unless you are sufficiently familiar with the aircraft's behavior under each flight mode. You must turn on the "Multiple Flight Modes" setting in the app before you can switch from P-mode to other modes.

The aircraft will automatically enter Attitude mode when both of the following conditions are met: (1) the camera sensing system is unavailable and (2) either there is weak GNSS signal or the compass experiences interference.

Users can also manually switch to the attitude mode, and the T/P/S mode can be set to A/P/S mode in the app.

Confidential
Do not publish

In Attitude mode, the camera sensing System and some advanced features are disabled. Therefore, the aircraft cannot position or auto-brake in this mode and is easily affected by its surroundings, which may result in horizontal shifting. Use the remote controller to position the aircraft.

Maneuvering the aircraft in Attitude mode can be difficult. DO NOT fly the aircraft too far away as you might lose control and cause a potential hazard. Avoid flying in areas where GNSS signal is weak, or in narrow and confined spaces. The aircraft will otherwise be forced to enter Attitude mode, leading to potential flight hazards, please land it in a safe place as soon as possible.

Flight Status Indicator

The aircraft features Front LEDs, and Aircraft Status Indicators. The positions of these LEDs are shown in the figure below:

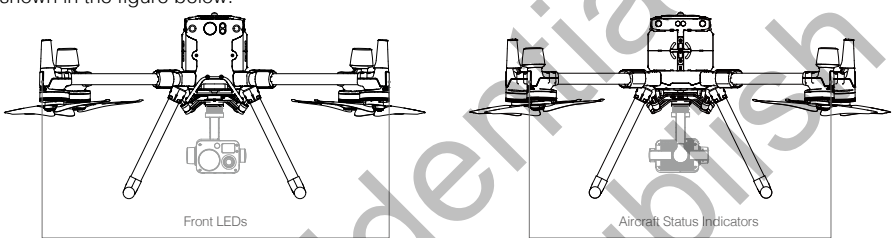

1. The Front LEDs show the orientation of the aircraft.
2. The Aircraft Status Indicators communicate the system status of the flight controller. Refer to the table below for more information about the Aircraft Status Indicators.

The Front LEDs, and Aircraft Status Indicators can be turned off in the app for unobtrusive drone operations.

Aircraft Status Indicator Description

Normal		
R G Y ·····	Red, green, and yellow flashes	Turning On and Self Diagnostic Testing
G ·····	Slow green flashing	P-mode with GNSS positioning*
G ×2 ·····	Two green flashes	P-mode with camera sensing Systems*
G B ·····	Alternating green and blue flashing	The RTK function is enabled and RTK data is used.
Y ·····	Slow yellow flashing	A-mode (no GPS and camera sensing positioning)
G ·····	Fast green flashing	Braking automatically after obstacle detected

Warning		
Y ·····	Fast yellow flashing	Remote Controller Signal Lost
R ·····	Slow red flashing	Low Battery Warning

Confidential
Do not publish