Using the Upward Gimbal Connector

The Explore2 Upward Gimbal Connector is used to mount a compatible payload to the top of the Explore2 aircraft. Its design gives it an IP44 Ingress Protection (only when equipped with a waterproof payload), in accordance with the global IEC 60529 standard.

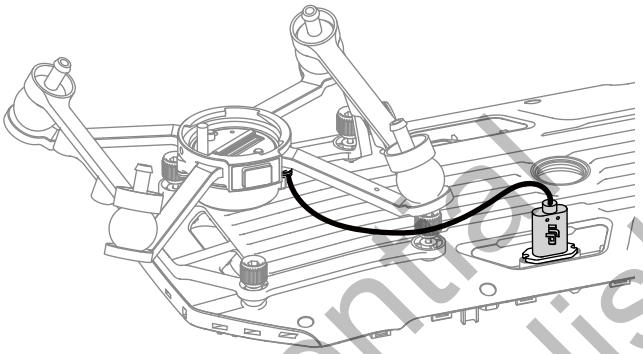

Using the Dual Gimbal Connector

The Explore2 Dual Gimbal Connector is used to mount a compatible payload to the bottom of the Explore2 aircraft. Its design gives it an IP44 Ingress Protection (only when equipped with a waterproof payload), in accordance with the global IEC 60529 standard.

1. Remove the single downward gimbal connector.

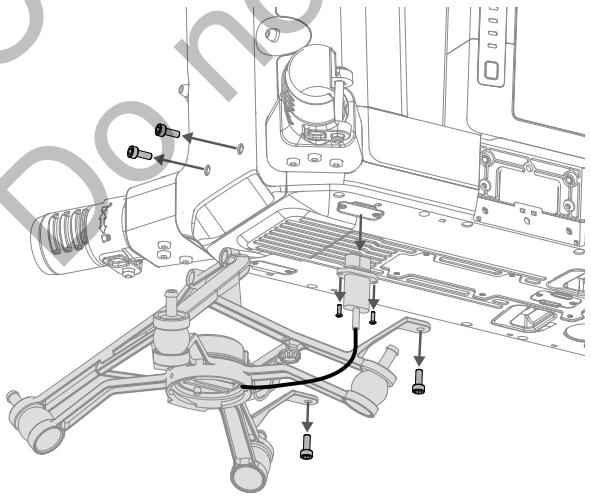

Confidential
Do not publish

2. Attach the Dual Gimbal Connector, and connect the cables.

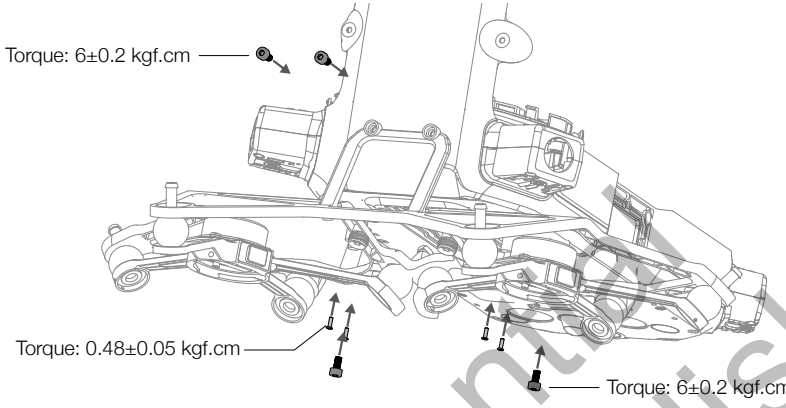

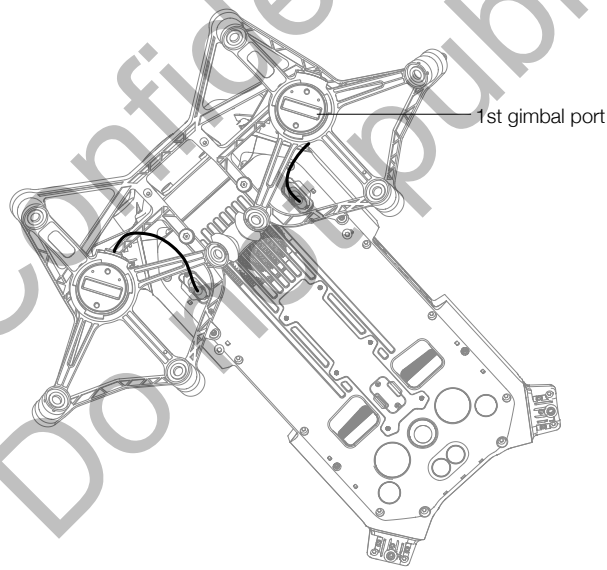

Confidential
Do not publish

Using the CSM Radar

Installing and Connecting

CSM Radar can be used with Explore2. Follow the steps below to install and connect it.

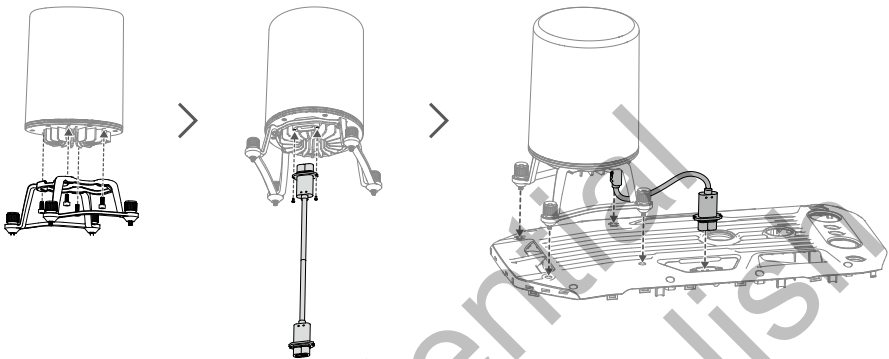

Using

For an added safety measure, a Circular Scanning Millimeter-Wave (CSM) Radar with a detection range between 1.5 to 30 m can be mounted on top of the aircraft.

Detection Range

Detection angle: 360 ° in horizontal direction, 60° in vertical direction, and 45° in upper direction. Detection distance: 1.5-30 m.

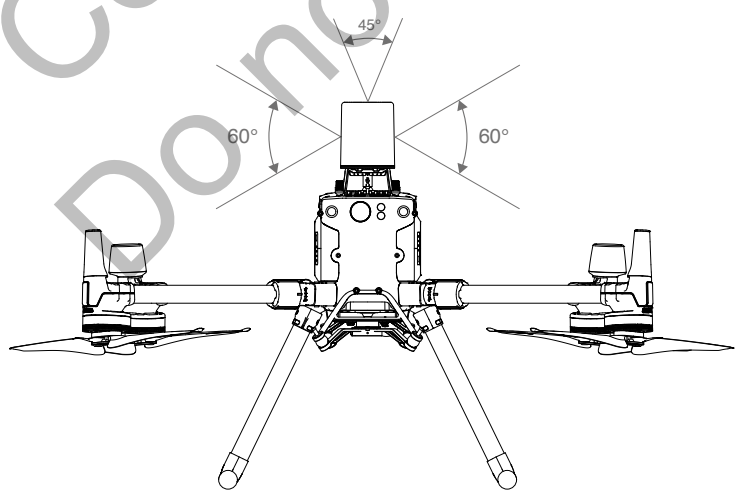

Confidential
Do not publish

- Note that the aircraft cannot sense obstacles that are not within the detection range. Fly with caution.
- The effective detection distance varies depending on the size and material of the obstacle. For example, when sensing strong reflective objects (such as buildings), the effective detection distance is around 30 m. When sensing weak reflective objects (such as dry tree branches), the distance is around 15 m. Obstacle sensing may malfunction or be invalid in areas outside of the effective detection distance.

Obstacle Avoidance Function Usage

The radar obstacle avoidance function should be enabled in the App. Set the aircraft safety distance (recommended to be greater than 2.5 meters in app. Maintain a flight speed less than 10 m/s when the radar module is in use. Flying higher than 4 meters is recommended for better obstacle avoidance performance.

- DO NOT touch or let your hands or body come in contact with the metal parts of the radar module when powering on or immediately after flight as they may be hot.
- In Manual operation mode, users have complete control of the aircraft. Pay attention to the flying speed and direction when operating. Be aware of the surrounding environment and avoid the blind spots of the radar module.
- If another device is installed on the aircraft (such as Manifold 2, please avoid blocking the radar FOV. If the radar FOV is blocked, the obstacle avoidance performance of the radar may decrease. Please fly with caution.
- Obstacle Avoidance is disabled in Attitude mode.
- Maintain full control of the aircraft at all times and DO NOT rely on the radar module and app. Keep the aircraft within VLOS at all times. Use your discretion to operate the aircraft manually to avoid obstacles.
- The radar modules sensitivity can be reduced when operating several radar equipped aircraft within a short distance from each other. Fly with caution.
- Before use, make sure that the radar module is clean and the outer protective cover is not cracked, chipped, sunken, or misshapen.
- DO NOT attempt to disassemble any part of the radar module that has already been mounted prior to shipping.
- The radar module is a precision instrument. DO NOT squeeze, tap, or hit the radar module.

- If the radar module frequently detects obstacles incorrectly, check to make sure the mounting bracket and the aircraft landing gear are properly secured. If the radar module still does not work, contact Skycatch Support.
- Keep the protective cover of the radar module clean. Clean the surface with a soft damp cloth and air dry before using again.

Specifications

Model	DR2424R
Operating Frequency	24.05-24.25 GHz
Power Consumption	12 W
Transmitter Power (EIRP)	SRRC: <13 dBm NCC/MIC/KCC/CE/FCC: <20 dBm
IP Rating	IP45
Dimensions	75×75×105.4 mm
Weight (without mounting bracket and cables)	336 g
Operating Temperature	-20° to 50°C (-4° to 122° F)

Confidential
Do not publish

Carrying Case Description

This diagram is intended to illustrate how to place the Explore2 parts and components. In-the-box items are subject to the contents received.

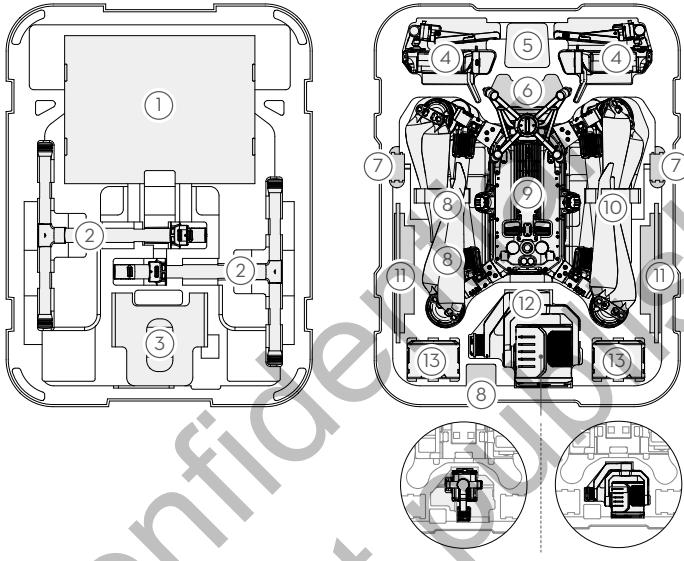

1. Propeller ×4
2. Landing Gear
3. Aircraft Protector
4. Remote Controller
5. Remote Controller Lanyard
6. Upward Gimbal Connector
7. RC Battery
8. USB Charger
9. Aircraft Body
11. Mobile Device (e.g. iPad)
12. Gimbal and Camera
13. Flight Battery

Confidential
Do not publish

⚠ Please note that the sleeves of the landing gears should be put in the way shown in the diagram, to avoid damage on the propellers when the carrying case is closed.