Antenna specification for approval

Customer name	Gomeidi		
Model	YV096-M39 special rearview mirror -8188FTV module		
Antenna frequency	2.4GHZ		
Antenna function	WIFI antenna		
Antenna material	FPC	FPC color	black
model	SF1948A-1B2-A		
Material number	SF1948A-1L11G-115-A		
Customer Part Number			

Ward accepted the signature		Client acknowledges signature	
structure		Purchase	
Document control		structure	
radio frequency		engineering	
To examine		QC	
Responsible	LTT	To examine	
date 2023.03.31	Seal area	date 2023.03.31	Seal area

Serial number	Certification number	Material type	Date of issue	Remarks
1	A2220186128101ER1	Tinned copper wire	2022-05-17	One year
2	CANEC2227657302	halogen	2022-12-28	One year
3	CANEC2227657303	Adhesive	2022-12-28	One year
4	SHAEC23000346911	FEP sheath	2023-01-13	One year
5	SHAEC22004639301	FEP insulation	2022-12-15	One year
6	SZXEC2203054804	Tin wire	2022-09-19	One year
7	SZXEC2203054808	Tin	2022-09-19	One year
8	ETR22300684	Printing ink	2022-08-09	One year
9	EKR22501369	Substrate	2022-05-27	One year
10	CANEC2227574118	EVA foam	2023-01-03	One year
11	SZXEC2202709609	Conductive cloth	2022-08-16	One year
12	CANEC2218227002	Gold plating	2022-08-30	One year

table of Contents

一:Device Support & Testable Antenna Type.....1

二:Overview.....2

三:Matching circuit diagram & machine picture & antenna picture3

四:Antenna standing wave ratio & Antenna Efficiency...4

五:Antenna map.....5

六:3D pattern.....6

七:Structural drawing.....7

一:Device Support & Testable Antenna Type

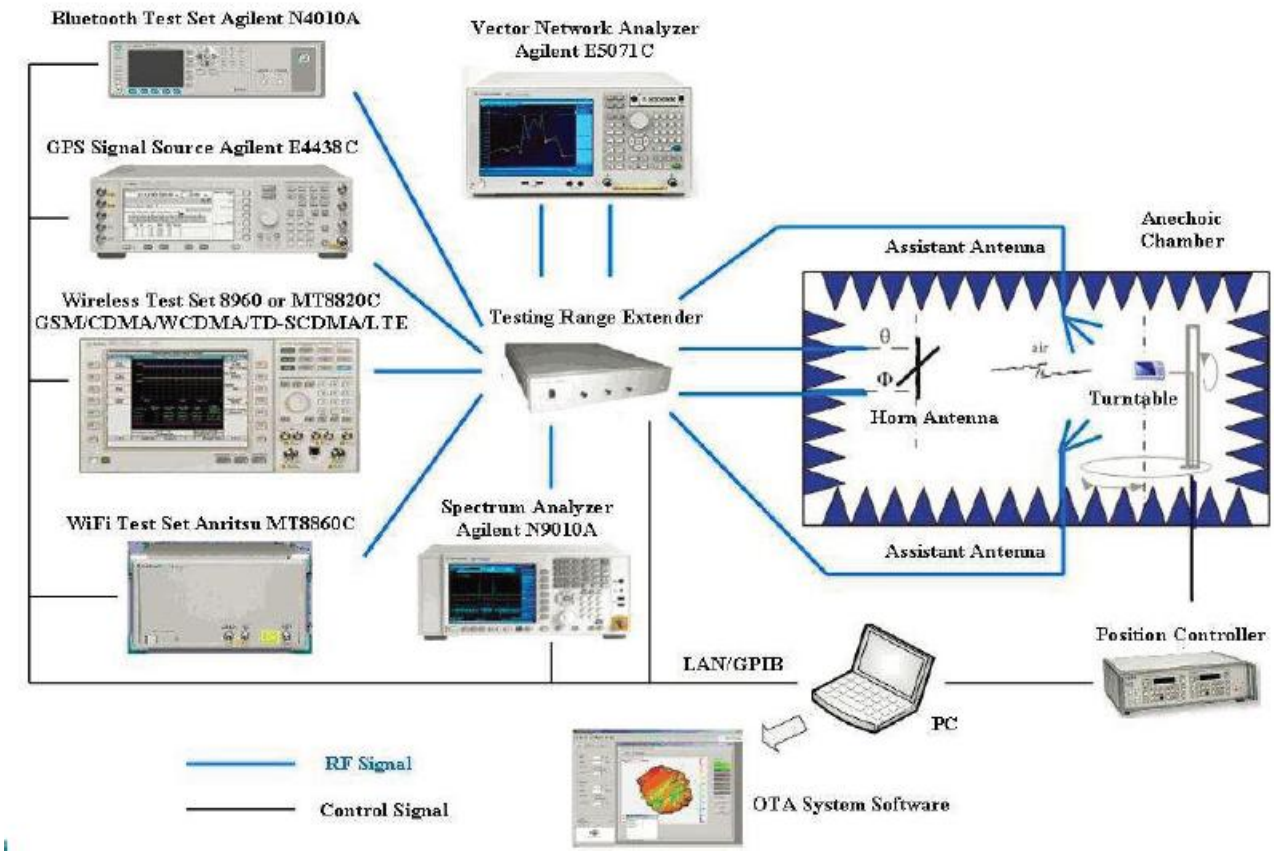

天线功能	频率范围	测试仪器	测试方式	测试标准
2G天线（GSM）	824MHz-960MHz，1710MHz-1990MHz	5071B、8960、OTA暗室	有源测试、无源测试	索沃德标准、客户要求
3G天线（WCDMA/TDSCDMA/CDMA-EVDO/2000）	824MHz-960MHz，1710MHz-2170MHz	5071B、8960、OTA暗室	有源测试、无源测试	索沃德标准、客户要求
4G天线（LTE-FDD/LTE-TDD）		5071B、CMW500、SP8011、OTA暗室	有源测试、无源测试	索沃德标准、客户要求
WIFI天线	2.4GHz-2.48GHz，5.15GHz-5.35GHz，5.725GHz-5.825GHz	5071B、CMW500、OTA暗室、路由器、PC	有源测试、无源测试、APK实测、吞吐量测试	索沃德标准、客户要求
BT天线	2.4GHz-2.48GHz	5071B、OTA暗室、蓝牙音箱	无源测试、实测	索沃德标准、客户要求
定位天线（GPS、GLONASS、北斗、伽利略）	1575.42MHz±10MHz 1602MHz+0.5625MHz 1561MHz+2.046MHz	5071B、OTA暗室、APK	无源测试、实测	索沃德标准、客户要求
NFC天线	13.56MHz	5071B、专用测试治具、OTA暗室、APK	无源测试、实测	索沃德标准、客户要求
遥控天线	433MHz	5071B、OTA暗室	无源测试、实测	索沃德标准、客户要求

二:Overview

(1)Antenna performance

1. This approval sheet supports for MID project. FPC antennas include in this project. This report is for the performance of WIFI antenna.
2. Antenna shape size: Meet the requirement of MID
3. Antenna band: 2400MHz~2500MHz
4. Antenna material: Antenna material meet the requirement of MID
5. Adhesive performance: Adhesive performance meet the requirement of MID
6. Antenna performance meet the spec below:

Description	2.4GHZ~2.5GHz	Units
VSWR	≤2.0	
Average Antenna Gain	≥-4.5	dB
Antenna Efficiency	≥40	%
Feed Impedance	50 ohms	
Operating Temperature	-40 to +85 deg C	
Polarization / Azimuth	Linear / Omni-directional	

(2)Mechanical Information

Mechanical Dimension	
Cable Length	115mm/GRAY
Description	WIFI antenna
Material	FPC
Coaxial Cable	50Ω/O.D.1.13mm
Environmental	
Operation Temperature	-40 to +85 deg C
Storage Temperature	-40 to +85 deg C

三:Matching circuit diagram & machine picture & antenna picture

(1)Matching circuit

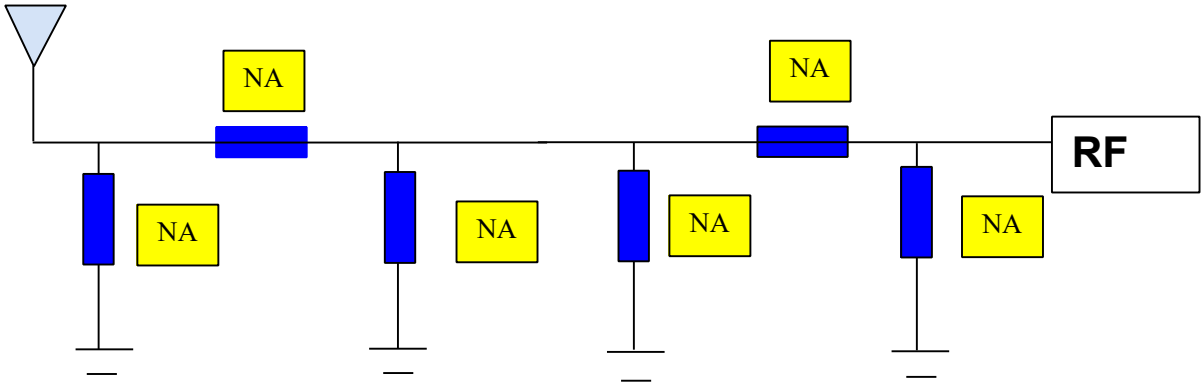

(2) Machine picture & antenna picture

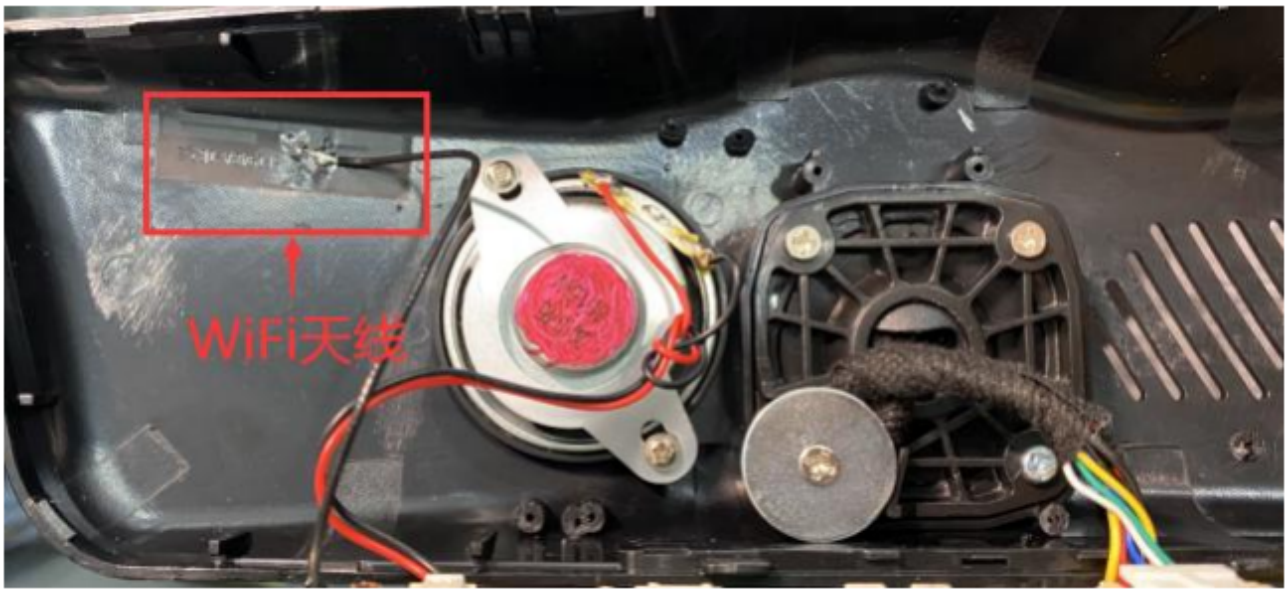

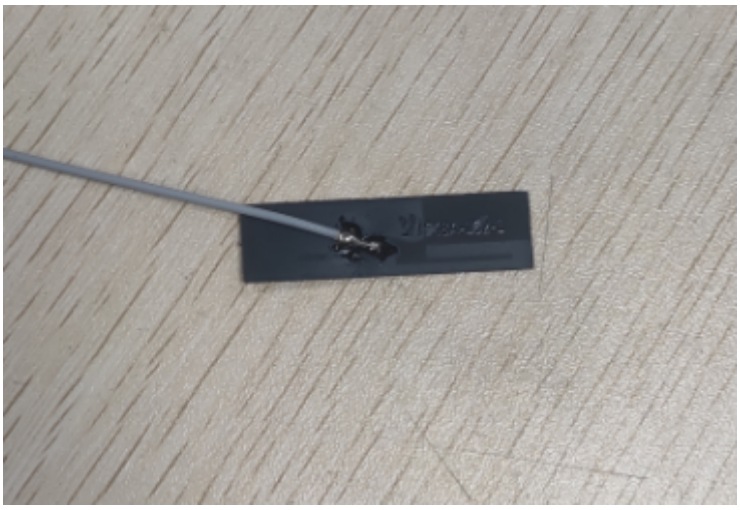

四:Antenna standing wave ratio & Antenna Efficiency

6th Floor, Building B, Hexi Hangcheng Industrial Zone, No. 135 Qianjin Second Road, Bao 'an District, Shenzhen
CityTel: 0755-29985185 Fax: 0755-27487028

Passive Test For 2.4G			
Freq	Effi	Effi	Gain
(MHz)	(%)	(dB)	(dBi)
2400	34.07	-4.68	1.88
2410	33.11	-4.8	2.14
2420	34.38	-4.64	2.53
2430	34.91	-4.57	2.66
2440	38.49	-4.15	3.02
2450	41.03	-3.87	3.32
2460	39.86	-3.99	3.16
2470	37.89	-4.21	2.88
2480	38.73	-4.12	2.76
2490	41.21	-3.85	2.9
2500	43.75	-3.59	2.98

五:Antenna map

实测效果 Measured effect	
机型编号 serial number	1
测试环境 test environment	索沃德研发中心 SWARD
测试设备 Test Equipment	iPhone 11
测试距离 Test distance	10m

六:3D pattern

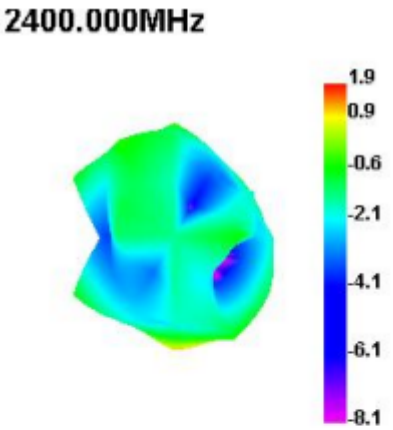

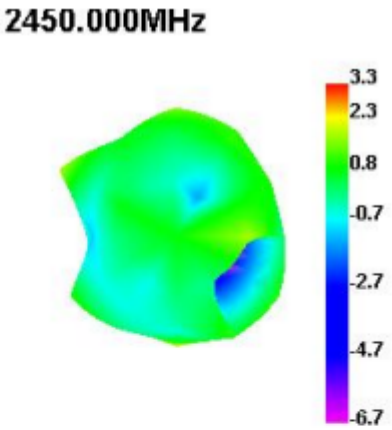

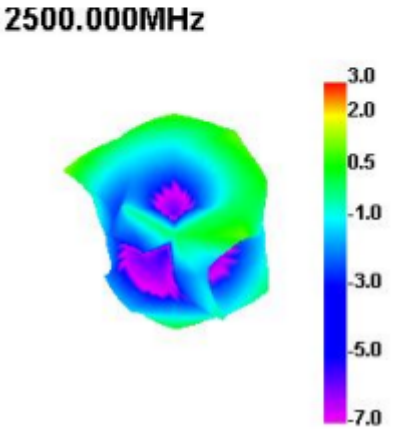

七:Structural drawing

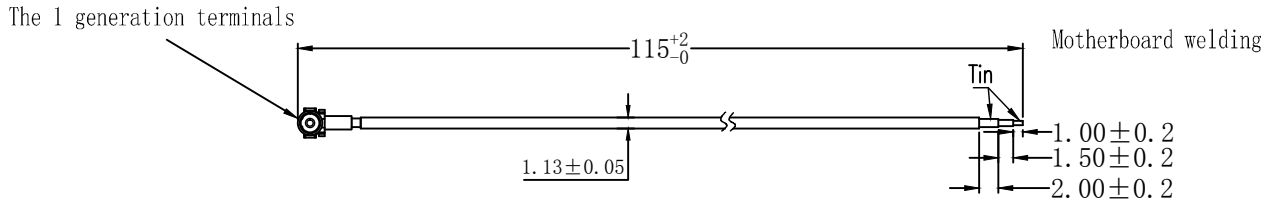

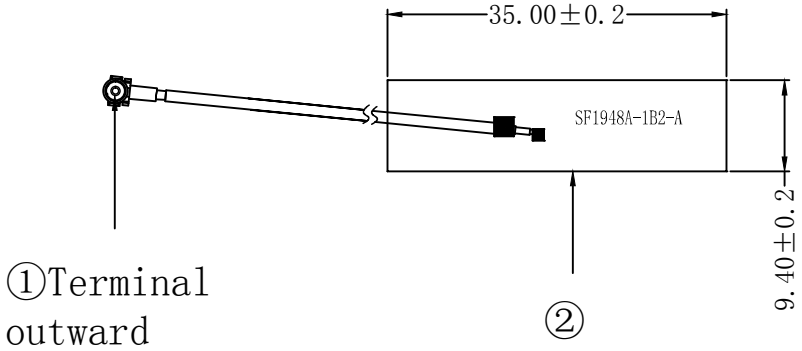

technical requirements:
1.* for critical dimensions;
2.Size conform to the requirements of the drawings;
3.No virtual welding welding point, false welding。Require full welding points。
4.Network test pass。
5.No marked tolerance according toSJ/T 10628 1995 6classes;

5										
4										
3						signatures	date	mass	signatures	date
2	FPC	black	1	SF1948A-1B2-A	RD	YWD	2023.03.31	Q C		
1	coaxial line	GRAY	1	ϕ=1.13	RF					
	name	color	quantity	specifications	audits			approval		

SWARD

time markup					percentage
1			A		1 : 1

ShenZhen SWARD Communication Technology Co.Ltd

SF1948A-1L11G-115-A

ROHS

SWD-FM-RD-012 A.0/2019.12