TEST REPORT

Application No.:	KSCR22110022010AT(SZCR2211003683AT)
FCC ID:	2AON8RX50
Applicant:	Shanghai BroadMobi Communication Technology Co., Ltd.
Address of Applicant:	15F, Building 9, No. 99, Tianzhou Rd., Xuhui District, Shanghai
Manufacturer:	Shanghai BroadMobi Communication Technology Co., Ltd.
Address of Manufacturer:	15F, Building 9, No. 99, Tianzhou Rd., Xuhui District, Shanghai
Equipment Under Test (EUT):	
EUT Name:	RX50
Model No.:	RX50
Trademark:	BroadMobi
Standard(s):	FCC Part 96.47
	FCC KDB 940660 D01 Part 96 CBRS Eqpt v03
	WINNF-TS-0122-V1.0.2 CBRS CBSD Test Specification
	WINNF-18-IN-00178 CBRS End User Device as UUT Test Guidelines
Date of Receipt:	2022-11-02
Date of Test:	2022-11-09 to 2022-11-11
Date of Issue:	2022-11-17
Test Result:	**Pass***

* In the configuration tested, the EUT complied with the standards specified above.

Eric Lin
Laboratory Manager

Unless otherwise agreed in writing, this document is issued by the Company subject to its General Conditions of Service printed overleaf, available on request or accessible at http://www.sgs.com/en/Terms-and-Conditions.aspx and, for electronic format documents, subject to Terms and Conditions for Electronic Documents at http://www.sgs.com/en/Terms-and-Conditions/Terms-e-Document.aspx. Attention is drawn to the limitation of liability, indemnification and jurisdiction issues defined therein. Any holder of this document is advised that information contained hereon reflects the Company's findings at the time of its intervention only and within the limits of Client's instructions, if any. The Company's sole responsibility is to its Client and this document does not exonerate parties to a transaction from exercising all their rights and obligations under the transaction documents. This document cannot be reproduced except in full, without prior written approval of the Company. Any unauthorized alteration, forgery or falsification of the content or appearance of this document is unlawful and offenders may be prosecuted to the fullest extent of the law. Unless otherwise stated the results shown in this test report refer only to the sample(s) tested and such sample(s) are retained for 30 days only.
Attention: To check the authenticity of testing /inspection report & certificate, please contact us at telephone: (86-755) 8307 1443, or email: CN.Doccheck@sgs.com

No.10, Weiye Road, Innovation Park, Kunshan, Jiangsu, China 215300 t(86-512)57355888 f(86-512)57370818 www.sgsgroup.com.cn
中国・江苏・昆山市留学生创业园伟业路10号 邮编 215300 t(86-512)57355888 f(86-512)57370818 sgs.china@sgs.com

Revision Record			
Version	**Description**	**Date**	**Remark**
00	Original	2022-11-17	/

Authorized for issue by:				
		Damon zhou		
		Damon Zhou / Project Engineer		
		Eric Lin		
		Eric Lin / Reviewer		

Unless otherwise agreed in writing, this document is issued by the Company subject to its General Conditions of Service printed overleaf, available on request or accessible at http://www.sgs.com/en/Terms-and-Conditions.aspx and, for electronic format documents, subject to Terms and Conditions for Electronic Documents at http://www.sgs.com/en/Terms-and-Conditions/Terms-e-Document.aspx. Attention is drawn to the limitation of liability, indemnification and jurisdiction issues defined therein. Any holder of this document is advised that information contained hereon reflects the Company's findings at the time of its intervention only and within the limits of Client's instructions, if any. The Company's sole responsibility is to its Client and this document does not exonerate parties to a transaction from exercising all their rights and obligations under the transaction documents. This document cannot be reproduced except in full, without prior written approval of the Company. Any unauthorized alteration, forgery or falsification of the content or appearance of this document is unlawful and offenders may be prosecuted to the fullest extent of the law. Unless otherwise stated the results shown in this test report refer only to the sample(s) tested and such sample(s) are retained for 30 days only.
Attention: To check the authenticity of testing /inspection report & certificate, please contact us at telephone: (86-755) 8307 1443, or email: CN.Doccheck@sgs.com

No.10, Weiye Road, Innovation Park, Kunshan, Jiangsu, China 215300 t(86-512)57355888 f(86-512)57370818 www.sgsgroup.com.cn
中国・江苏・昆山市留学生创业园伟业路10号 邮编 215300 t(86-512)57355888 f(86-512)57370818 sgs.china@sgs.com

2 Test Summary

Item	Standard	Test Case ID	Result
End User Device additional requirement	96.47	/	Pass

The UUT is an End User Device. According to the specifications of the manufacturer, it must comply with the requirements of the following standards:

Test standards:
FCC Part 96.47
FCC KDB 940660 D01 Part 96 CBRS Eqpt v03
WINNF-TS-0122-V1.0.2 CBRS CBSD Test Specification
WINNF-18-IN-00178 CBRS End User Device as UUT Test Guidelines

Unless otherwise agreed in writing, this document is issued by the Company subject to its General Conditions of Service printed overleaf, available on request or accessible at http://www.sgs.com/en/Terms-and-Conditions.aspx and, for electronic format documents, subject to Terms and Conditions for Electronic Documents at http://www.sgs.com/en/Terms-and-Conditions/Terms-e-Document.aspx. Attention is drawn to the limitation of liability, indemnification and jurisdiction issues defined therein. Any holder of this document is advised that information contained hereon reflects the Company's findings at the time of its intervention only and within the limits of Client's instructions, if any. The Company's sole responsibility is to its Client and this document does not exonerate parties to a transaction from exercising all their rights and obligations under the transaction documents. This document cannot be reproduced except in full, without prior written approval of the Company. Any unauthorized alteration, forgery or falsification of the content or appearance of this document is unlawful and offenders may be prosecuted to the fullest extent of the law. Unless otherwise stated the results shown in this test report refer only to the sample(s) tested and such sample(s) are retained for 30 days only.
Attention: To check the authenticity of testing /inspection report & certificate, please contact us at telephone: (86-755) 8307 1443, or email: CN.Doccheck@sgs.com

No.10, Weiye Road, Innovation Park, Kunshan, Jiangsu, China 215300 t(86-512)57355888 f(86-512)57370818 www.sgsgroup.com.cn
中国・江苏・昆山市留学生创业园伟业路10号 邮编 215300 t(86-512)57355888 f(86-512)57370818 sgs.china@sgs.com

3 Contents

Page

1 COVER PAGE 1

2 TEST SUMMARY 3

3 CONTENTS 4

4 GENERAL INFORMATION 5

4.1 DETAILS OF E.U.T. 5
4.2 MEASUREMENT UNCERTAINTY 5
4.3 DESCRIPTION OF SUPPORT UNITS 5
4.4 TEST LOCATION 6
4.5 TEST FACILITY 6

5 EQUIPMENT LIST 7

6 TEST METHOD AND ENVIRONMENT 8

6.1 END USER DEVICE CONFORMANCE AND PERFORMANCE 8
6.2 TEST ENVIRONMENT 8
6.3 TEST REQUIREMENT 8
6.4 TEST SETUP 8
6.5 TEST RESULT 9

7 PHOTOGRAPHS 11

7.1 EUT CONSTRUCTIONAL DETAILS (EUT PHOTOS) 11

Unless otherwise agreed in writing, this document is issued by the Company subject to its General Conditions of Service printed overleaf, available on request or accessible at http://www.sgs.com/en/Terms-and-Conditions.aspx and, for electronic format documents, subject to Terms and Conditions for Electronic Documents at http://www.sgs.com/en/Terms-and-Conditions/Terms-e-Document.aspx. Attention is drawn to the limitation of liability, indemnification and jurisdiction issues defined therein. Any holder of this document is advised that information contained hereon reflects the Company's findings at the time of its intervention only and within the limits of Client's instructions, if any. The Company's sole responsibility is to its Client and this document does not exonerate parties to a transaction from exercising all their rights and obligations under the transaction documents. This document cannot be reproduced except in full, without prior written approval of the Company. Any unauthorized alteration, forgery or falsification of the content or appearance of this document is unlawful and offenders may be prosecuted to the fullest extent of the law. Unless otherwise stated the results shown in this test report refer only to the sample(s) tested and such sample(s) are retained for 30 days only.
Attention: To check the authenticity of testing /inspection report & certificate, please contact us at telephone: (86-755) 8307 1443, or email: CN.Doccheck@sgs.com

No.10, Weiye Road, Innovation Park, Kunshan, Jiangsu, China 215300 t(86-512)57355888 f(86-512)57370818 www.sgsgroup.com.cn
中国・江苏・昆山市留学生创业园伟业路10号 邮编 215300 t(86-512)57355888 f(86-512)57370818 sgs.china@sgs.com

Member of the SGS Group (SGS SA)

4 General Information

4.1 Details of E.U.T.

Power supply:	Adapter Model No.: GQ24-120200-AU Input: 100-240V~50/60Hz, 1A Output: 12.0V, 2.0A, 24.0W
Sample Type:	End User Device
Transmitter Frequency Band:	LTE Band 48
Transmitter Frequency Range:	3550~3700MHz
Hardware Version:	RX50A_MB_V4.0
Software Version:	1.01
Antenna Gain:	4.79dBi
Transmitter Type:	1T4R

4.2 Measurement Uncertainty

No.	Item	Measurement Uncertainty
1	Radio Frequency	± 7.25 x 10^{-8}
2	RF conducted power	± 0.75dB
3	Temperature test	± 1°C
4	Humidity test	± 3%
5	Supply voltages	± 1.5%
6	Time	± 3%

4.3 Description of Support Units

Description	Manufacturer	Model No.	Serial No.
EPC	Lanner Electronics Inc.	LICA-1513A	LR202002004052
OMC	Lanner Electronics Inc.	LICA-1513A	LR202002004054
Router	TP-LINK	TL-R860+	1175379002425
Base station	Baicells	mBS31001H (FCC ID: 2AG32MBS3100196N)	1202000240194DP0023

Unless otherwise agreed in writing, this document is issued by the Company subject to its General Conditions of Service printed overleaf, available on request or accessible at http://www.sgs.com/en/Terms-and-Conditions.aspx and, for electronic format documents, subject to Terms and Conditions for Electronic Documents at http://www.sgs.com/en/Terms-and-Conditions/Terms-e-Document.aspx. Attention is drawn to the limitation of liability, indemnification and jurisdiction issues defined therein. Any holder of this document is advised that information contained hereon reflects the Company's findings at the time of its intervention only and within the limits of Client's instructions, if any. The Company's sole responsibility is to its Client and this document does not exonerate parties to a transaction from exercising all their rights and obligations under the transaction documents. This document cannot be reproduced except in full, without prior written approval of the Company. Any unauthorized alteration, forgery or falsification of the content or appearance of this document is unlawful and offenders may be prosecuted to the fullest extent of the law. Unless otherwise stated the results shown in this test report refer only to the sample(s) tested and such sample(s) are retained for 30 days only.
Attention: To check the authenticity of testing /inspection report & certificate, please contact us at telephone: (86-755) 8307 1443, or email: CN.Doccheck@sgs.com

No.10, Weiye Road, Innovation Park, Kunshan, Jiangsu, China 215300 t(86-512)57355888 f(86-512)57370818 www.sgsgroup.com.cn
中国・江苏・昆山市留学生创业园伟业路10号 邮编 215300 t(86-512)57355888 f(86-512)57370818 sgs.china@sgs.com

4.4 Test Location

All tests were performed at:

Compliance Certification Services (Kunshan) Inc.

No.10 Weiye Rd, Innovation park, Eco&Tec, Development Zone, Kunshan City, Jiangsu, China.

Tel: +86 512 5735 5888 Fax: +86 512 5737 0818

No tests were sub-contracted.

4.5 Test Facility

The test facility is recognized, certified, or accredited by the following organizations:

• A2LA (Certificate No. 2541.01)

Compliance Certification Services (Kunshan) Inc. is accredited by the American Association for Laboratory Accreditation (A2LA). Certificate No. 2541.01.

• FCC (Designation Number: CN1172)

Compliance Certification Services (Kunshan) Inc. has been recognized as an accredited testing laboratory. Designation Number: CN1172.

Unless otherwise agreed in writing, this document is issued by the Company subject to its General Conditions of Service printed overleaf, available on request or accessible at http://www.sgs.com/en/Terms-and-Conditions.aspx and, for electronic format documents, subject to Terms and Conditions for Electronic Documents at http://www.sgs.com/en/Terms-and-Conditions/Terms-e-Document.aspx. Attention is drawn to the limitation of liability, indemnification and jurisdiction issues defined therein. Any holder of this document is advised that information contained hereon reflects the Company's findings at the time of its intervention only and within the limits of Client's instructions, if any. The Company's sole responsibility is to its Client and this document does not exonerate parties to a transaction from exercising all their rights and obligations under the transaction documents. This document cannot be reproduced except in full, without prior written approval of the Company. Any unauthorized alteration, forgery or falsification of the content or appearance of this document is unlawful and offenders may be prosecuted to the fullest extent of the law. Unless otherwise stated the results shown in this test report refer only to the sample(s) tested and such sample(s) are retained for 30 days only.
Attention: To check the authenticity of testing /inspection report & certificate, please contact us at telephone: (86-755) 8307 1443, or email: CN.Doccheck@sgs.com

No.10, Weiye Road, Innovation Park, Kunshan, Jiangsu, China 215300 t(86-512)57355888 f(86-512)57370818 www.sgsgroup.com.cn
中国・江苏・昆山市留学生创业园伟业路10号 邮编 215300 t(86-512)57355888 f(86-512)57370818 sgs.china@sgs.com

5 Equipment List

Test Equipment	Manufacturer	Model No.	Inventory No.	Cal. Date	Cal. Due date
Laptop	Lenovo	Y510P	HFL000026	N/A	N/A
Spectrum Analyzer	KEYSIGHT	N9020A	KUS2001M001-2	2022/08/22	2023/08/21
Shield Room	研创	N/A	KS301115-2	N/A	N/A
Coaxial Cable	Thermax	N/A	14	2022/10/16	2023/10/15
Attenuator	Mini-Circuits	NAT-6-2W	15542-1	N.C.R.	N.C.R.
Humidity / Temperature Indicator	Anymetre	TH603	CZ700001(4/7)	2022/10/14	2023/10/13

Unless otherwise agreed in writing, this document is issued by the Company subject to its General Conditions of Service printed overleaf, available on request or accessible at http://www.sgs.com/en/Terms-and-Conditions.aspx and, for electronic format documents, subject to Terms and Conditions for Electronic Documents at http://www.sgs.com/en/Terms-and-Conditions/Terms-e-Document.aspx. Attention is drawn to the limitation of liability, indemnification and jurisdiction issues defined therein. Any holder of this document is advised that information contained hereon reflects the Company's findings at the time of its intervention only and within the limits of Client's instructions, if any. The Company's sole responsibility is to its Client and this document does not exonerate parties to a transaction from exercising all their rights and obligations under the transaction documents. This document cannot be reproduced except in full, without prior written approval of the Company. Any unauthorized alteration, forgery or falsification of the content or appearance of this document is unlawful and offenders may be prosecuted to the fullest extent of the law. Unless otherwise stated the results shown in this test report refer only to the sample(s) tested and such sample(s) are retained for 30 days only.
Attention: To check the authenticity of testing /inspection report & certificate, please contact us at telephone: (86-755) 8307 1443, or email: CN.Doccheck@sgs.com

No.10, Weiye Road, Innovation Park, Kunshan, Jiangsu, China 215300 t(86-512)57355888 f(86-512)57370818 www.sgsgroup.com.cn
中国・江苏・昆山市留学生创业园伟业路10号 邮编 215300 t(86-512)57355888 f(86-512)57370818 sgs.china@sgs.com

6 Test Method and Environment

6.1 End User Device Conformance and Performance

Test Requirement: FCC Part 96.47

Test Method: WINNF-18-IN-00178 CBRS End User Device as UUT Test Guidelines

6.2 Test Environment

Environmental Conditions: 25deg. C, 65%RH

6.3 Test Requirement

FCC Part 96.47

a). End User Devices may operate only if they can positively receive and decode an authorization signal transmitted by a CBSD, including the frequencies and power limits for their operation.

b). An End User Device must discontinue operations, change frequencies, or change its operational power level within 10 seconds of receiving instructions from its associated CBSD.

6.4 Test Setup

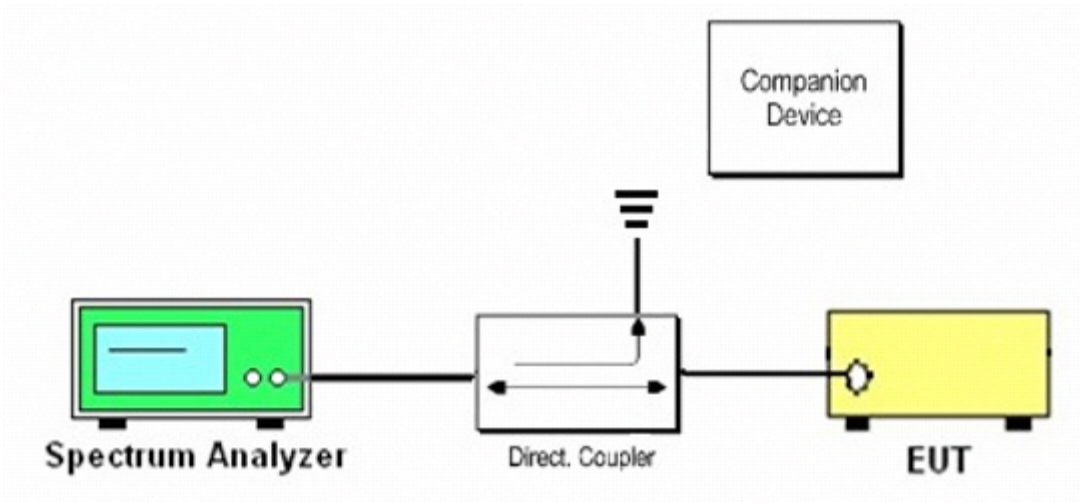

End User Device as UUT, the companion device is certified CBSD

Unless otherwise agreed in writing, this document is issued by the Company subject to its General Conditions of Service printed overleaf, available on request or accessible at http://www.sgs.com/en/Terms-and-Conditions.aspx and, for electronic format documents, subject to Terms and Conditions for Electronic Documents at http://www.sgs.com/en/Terms-and-Conditions/Terms-e-Document.aspx. Attention is drawn to the limitation of liability, indemnification and jurisdiction issues defined therein. Any holder of this document is advised that information contained hereon reflects the Company's findings at the time of its intervention only and within the limits of Client's instructions, if any. The Company's sole responsibility is to its Client and this document does not exonerate parties to a transaction from exercising all their rights and obligations under the transaction documents. This document cannot be reproduced except in full, without prior written approval of the Company. Any unauthorized alteration, forgery or falsification of the content or appearance of this document is unlawful and offenders may be prosecuted to the fullest extent of the law. Unless otherwise stated the results shown in this test report refer only to the sample(s) tested and such sample(s) are retained for 30 days only.
Attention: To check the authenticity of testing /inspection report & certificate, please contact us at telephone: (86-755) 8307 1443, or email: CN.Doccheck@sgs.com

No.10, Weiye Road, Innovation Park, Kunshan, Jiangsu, China 215300 t(86-512)57355888 f(86-512)57370818 www.sgsgroup.com.cn
中国・江苏・昆山市留学生创业园伟业路10号 邮编 215300 t(86-512)57355888 f(86-512)57370818 sgs.china@sgs.com

6.5 Test Result

Setup with frequency 3600-3610MHz and power level 23dBm/MHz
Check EUD Tx Frequency and power
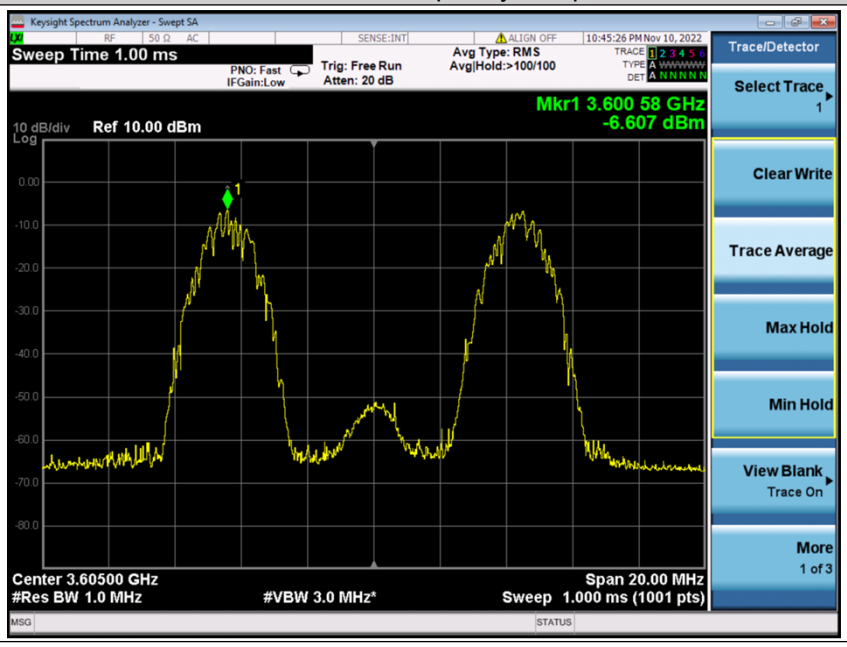
EIRP PSD=-6.607+3+4.4=0.793dBm/MHz, loss of Cable and Splitter is 3dB, Antenna gain is 4.4dBi
EUD stops transmission within 10 seconds of receiving instructions from its associated CBSD.

Unless otherwise agreed in writing, this document is issued by the Company subject to its General Conditions of Service printed overleaf, available on request or accessible at http://www.sgs.com/en/Terms-and-Conditions.aspx and, for electronic format documents, subject to Terms and Conditions for Electronic Documents at http://www.sgs.com/en/Terms-and-Conditions/Terms-e-Document.aspx. Attention is drawn to the limitation of liability, indemnification and jurisdiction issues defined therein. Any holder of this document is advised that information contained hereon reflects the Company's findings at the time of its intervention only and within the limits of Client's instructions, if any. The Company's sole responsibility is to its Client and this document does not exonerate parties to a transaction from exercising all their rights and obligations under the transaction documents. This document cannot be reproduced except in full, without prior written approval of the Company. Any unauthorized alteration, forgery or falsification of the content or appearance of this document is unlawful and offenders may be prosecuted to the fullest extent of the law. Unless otherwise stated the results shown in this test report refer only to the sample(s) tested and such sample(s) are retained for 30 days only.
Attention: To check the authenticity of testing /inspection report & certificate, please contact us at telephone: (86-755) 8307 1443, or email: CN.Doccheck@sgs.com

No.10, Weiye Road, Innovation Park, Kunshan, Jiangsu, China 215300 t(86-512)57355888 f(86-512)57370818 www.sgsgroup.com.cn
中国・江苏・昆山市留学生创业园伟业路10号 邮编 215300 t(86-512)57355888 f(86-512)57370818 sgs.china@sgs.com

Setup with frequency 359-3610MHz and power level 5dBm/MHz
Check EUD Tx Frequency and power
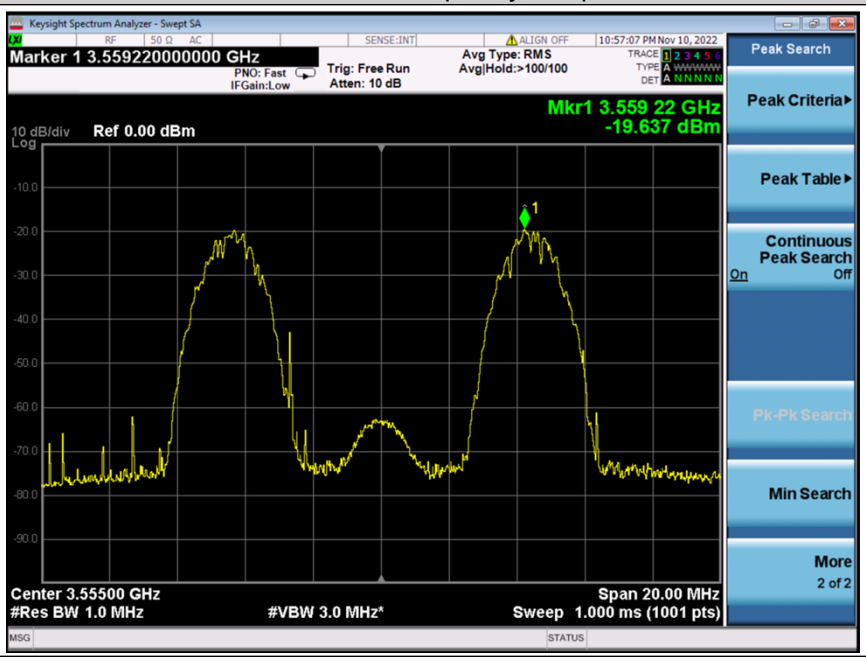
EIRP PSD=-19.637+3+4.4=-12.237dBm/MHz, loss of Cable and Splitter is 3dB, Antenna gain is 4.4dBi
EUD stops transmission within 10 seconds of receiving instructions from its associated CBSD.
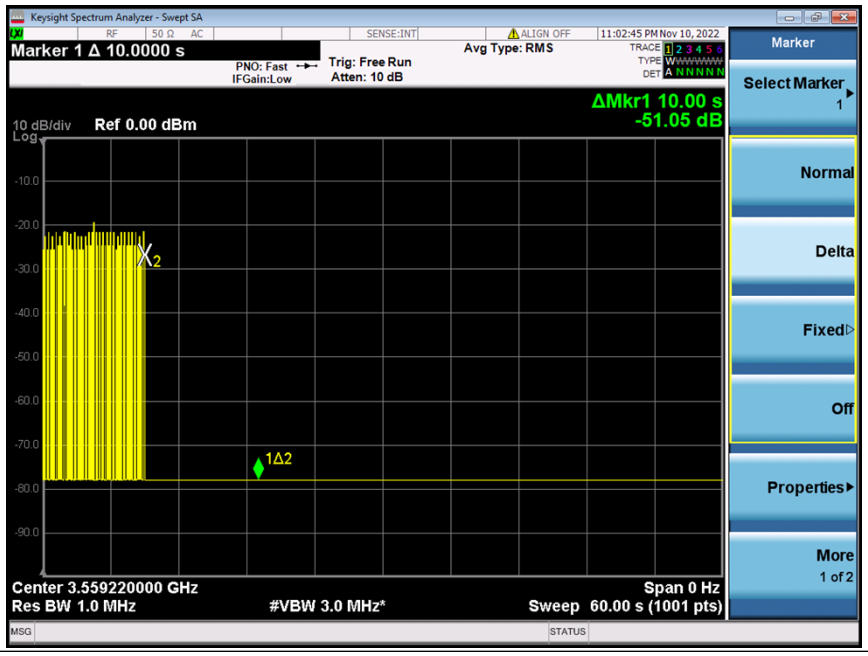

Unless otherwise agreed in writing, this document is issued by the Company subject to its General Conditions of Service printed overleaf, available on request or accessible at http://www.sgs.com/en/Terms-and-Conditions.aspx and, for electronic format documents, subject to Terms and Conditions for Electronic Documents at http://www.sgs.com/en/Terms-and-Conditions/Terms-e-Document.aspx. Attention is drawn to the limitation of liability, indemnification and jurisdiction issues defined therein. Any holder of this document is advised that information contained hereon reflects the Company's findings at the time of its intervention only and within the limits of Client's instructions, if any. The Company's sole responsibility is to its Client and this document does not exonerate parties to a transaction from exercising all their rights and obligations under the transaction documents. This document cannot be reproduced except in full, without prior written approval of the Company. Any unauthorized alteration, forgery or falsification of the content or appearance of this document is unlawful and offenders may be prosecuted to the fullest extent of the law. Unless otherwise stated the results shown in this test report refer only to the sample(s) tested and such sample(s) are retained for 30 days only.
Attention: To check the authenticity of testing /inspection report & certificate, please contact us at telephone: (86-755) 8307 1443, or email: CN.Doccheck@sgs.com

No.10, Weiye Road, Innovation Park, Kunshan, Jiangsu, China 215300 t(86-512)57355888 f(86-512)57370818 www.sgsgroup.com.cn
中国・江苏・昆山市留学生创业园伟业路10号 邮编 215300 t(86-512)57355888 f(86-512)57370818 sgs.china@sgs.com

7 Photographs

7.1 EUT Constructional Details (EUT Photos)

Please Refer to external and internal photos for details.

- End of the Report -

Unless otherwise agreed in writing, this document is issued by the Company subject to its General Conditions of Service printed overleaf, available on request or accessible at http://www.sgs.com/en/Terms-and-Conditions.aspx and, for electronic format documents, subject to Terms and Conditions for Electronic Documents at http://www.sgs.com/en/Terms-and-Conditions/Terms-e-Document.aspx. Attention is drawn to the limitation of liability, indemnification and jurisdiction issues defined therein. Any holder of this document is advised that information contained hereon reflects the Company's findings at the time of its intervention only and within the limits of Client's instructions, if any. The Company's sole responsibility is to its Client and this document does not exonerate parties to a transaction from exercising all their rights and obligations under the transaction documents. This document cannot be reproduced except in full, without prior written approval of the Company. Any unauthorized alteration, forgery or falsification of the content or appearance of this document is unlawful and offenders may be prosecuted to the fullest extent of the law. Unless otherwise stated the results shown in this test report refer only to the sample(s) tested and such sample(s) are retained for 30 days only.
Attention: To check the authenticity of testing /inspection report & certificate, please contact us at telephone: (86-755) 8307 1443, or email: CN.Doccheck@sgs.com

No.10, Weiye Road, Innovation Park, Kunshan, Jiangsu, China 215300 t(86-512)57355888 f(86-512)57370818 www.sgsgroup.com.cn
中国・江苏・昆山市留学生创业园伟业路10号 邮编 215300 t(86-512)57355888 f(86-512)57370818 sgs.china@sgs.com