MASTERBUILT®

MB20041223

GRAVITY SERIES™ XT
DIGITAL CHARCOAL GRILL AND SMOKER

XXXXXXXXXXXX 231110-GH

Welcome | Bienvenue | Bienvenido | Welkom!| Willkommen | Üdvözöljük! | Benvenuti | Velkommen | Добрый день | Välkommen | Tervetuloa | Witajcie

Assembly Images are shown first. Please read and follow all warnings and instructions before assembling and using the appliance.

Les images de montage sont montrées en premier. Veuillez lire et suivre tous les avertissements et toutes les instructions avant de monter et d'utiliser l'appareil.

Las imágenes de ensamblaje se muestran primero. Lea y siga todas las advertencias e instrucciones antes de ensamblar y usar el artefacto.

De eerste pagina's zijn afbeeldingen van de montage. Lees en volg alle waarschuwingen en instructies, voordat u het apparaat monteert en gebruikt.

Die Montagebilder werden zuerst angezeigt. Bitte lesen und befolgen Sie alle Warnungen und Anweisungen, bevor Sie das Gerät montieren und verwenden.

Az összeszerelési képek jelennek meg először. A készülék összeszerelése és használata előtt olvassa el, majd tartsa be az összes figyelmeztetést és utasítást.

Immagini del montaggio all'inizio. Leggere e rispettare tutte le avvertenze e le istruzioni prima di montare e mettere in funzione l'apparecchio.

Monteringsillustrasjoner er vist først. Les og følg alle advarsler og instruksjoner før montering og bruk av apparatet.

Вначале идут сборочные схемы. Прежде чем приступить к сборке и эксплуатации устройства, прочтите все предупреждения и инструкции и следуйте им.

Monteringsbilder visas först. Läs och följ alla varningar och anvisningar innan du monterar och använder apparaten.

Laitteen kokoonpanokuvat näytetään ensin. Lue ja noudata kaikkia varoituksia ja ohjeita ennen laitteen kokoamista ja käyttöä.

Ilustracje dotyczące montażu są zamieszczone na początku. Przed przystąpieniem do montażu i użytkowaniem urządzenia proszę przeczytać wszystkie ostrzeżenia i instrukcje i ich przestrzegać.

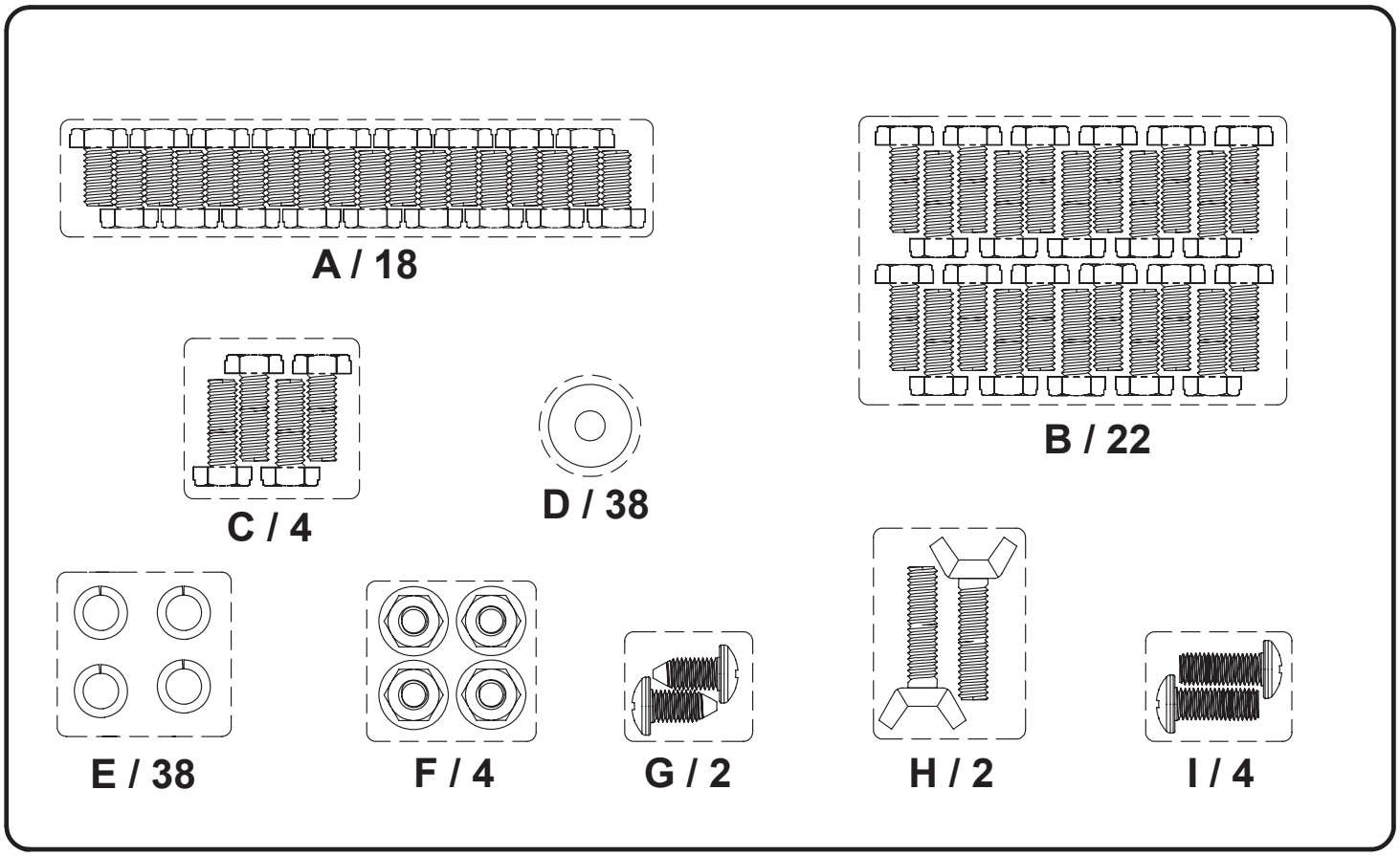
A / 18
B / 22
C / 4
D / 38
E / 38
F / 4
G / 2
H / 2
I / 4

Parts Diagram | Diagramme des pieces | Diagrama de partes

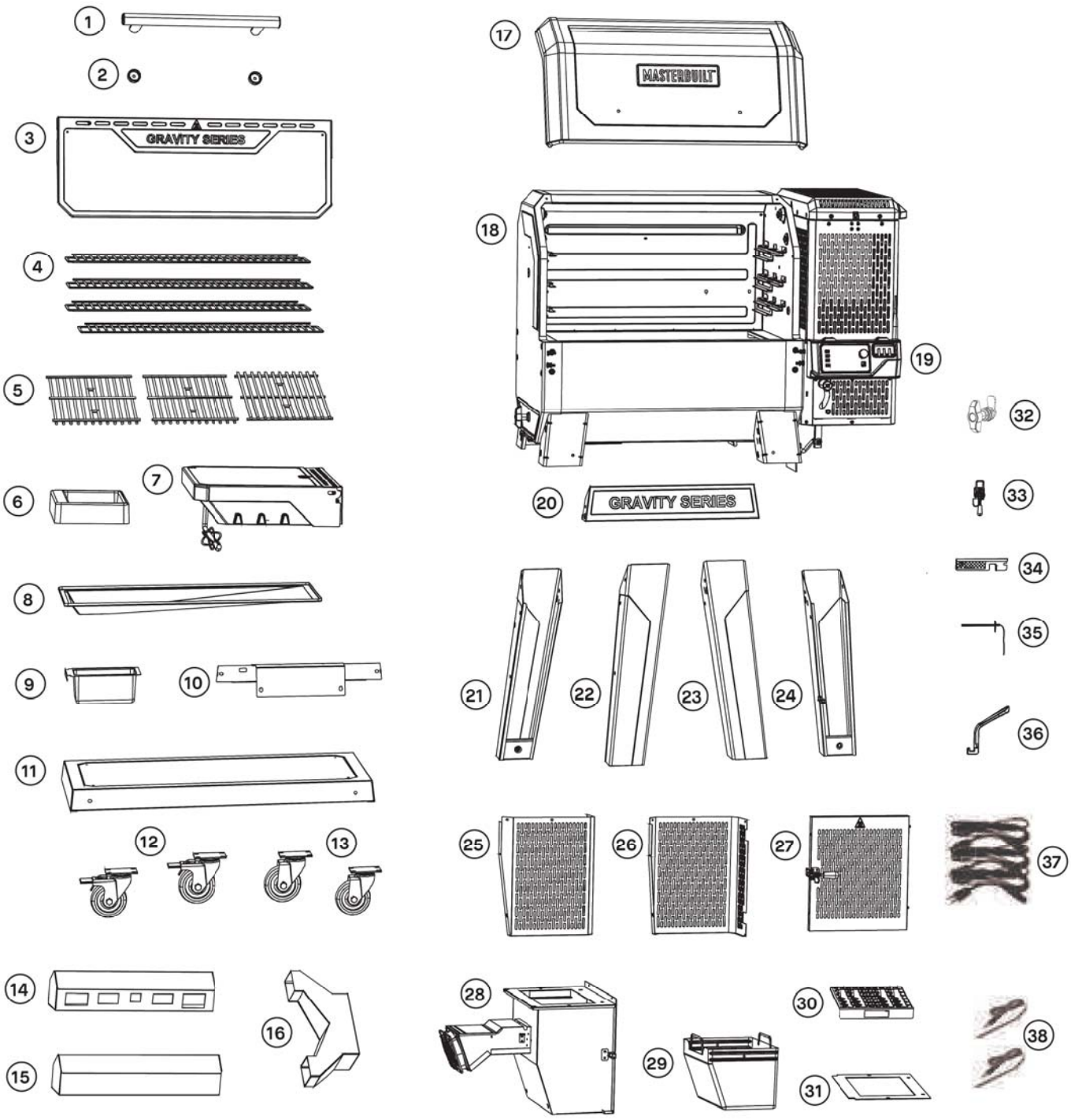

Parts List English

NO.	QTY.	DESCRIPTION	NO.	QTY.	DESCRIPTION
1	1	Handle Tube	20	1	Front Leg Cross Brace
2	2	Lid Handle Base	21	1	Left Rear Leg
3	1	Front Shelf	22	1	Left Front Leg
4	4	Smoking/Warming Racks	23	1	Right Front Leg
5	3	Cooking Grates	24	1	Right Rear Leg
6	1	Shelf Drawer	25	1	Hopper Heat Shield - Bottom Front
7	1	Side Shelf	26	1	Hopper Heat Shield - Bottom Rear
8	1	Grease Tray	27	1	Hopper Door Assembly
9	1	Grease Bucket	28	1	Hopper Assembly - Bottom
10	1	Hopper Leg Brace	29	1	Ash Bucket
11	1	Bottom Shelf	30	1	Charcoal Grate
12	2	Locking Caster	31	1	Hopper Gasket
13	2	Caster	32	1	Grease Tray Door Handle
14	1	Rear Manifold	33	1	Lower Hopper Door Latch
15	1	Front Manifold	34	1	Temperature Probe Bracket
16	1	Manifold Adapter	35	1	Temperature Probe
17	1	Lid	36	1	Grate Lifter
18	1	Body	37	3	Power Cord
19	1	Controller	38	2	Meat Probe

BEFORE ASSEMBLY READ ALL INSTRUCTIONS CAREFULLY

- Assemble on a clean flat surface.
- Recommend assembling on cardboard to avoid residue on floors or scratches.
- Gloves recommended for assembly.
- Tools needed: Phillips head screwdriver, adjustable wrench, 19mm socket wrench.
- Approximate assembly time: 1 hour, 45 minutes.
- Recommend two people assemble to increase ease and reduce assembly time.
- Actual product may differ from picture shown.
- It is possible that some assembly steps have been completed in the factory.
- Remove all printed labels before use.

DO NOT RETURN TO RETAILER!

For assembly assistance, missing or damaged parts, please contact Masterbuilt® Customer Service.

Masterbuilt ® Premier Specialty Brands, LLC, 5367 New Peachtree Road, Suite 150, Chamblee, GA 30341 www.masterbuilt.com/pages/customer-support
Masterbuilt ® Kamado Joe Europe, Lange Voorhout 86, 2514 EJ, Den Haag, Netherlands international.masterbuilt.com/pages/customer-support
Masterbuilt ® Kamado Joe UK Limited, Cheyenne House West Street, Farnham GU9 7EQ international.masterbuilt.com/pages/customer-support
Australia & New Zealand: Please contact your retailer

Parts List French

NO.	QTY.	DESCRIPTION	NO.	QTY.	DESCRIPTION
1	1	Handle Tube	20	1	Front Leg Cross Brace
2	2	Lid Handle Base	21	1	Left Rear Leg
3	1	Front Shelf	22	1	Left Front Leg
4	4	Smoking/Warming Racks	23	1	Right Front Leg
5	3	Cooking Grates	24	1	Right Rear Leg
6	1	Shelf Drawer	25	1	Hopper Heat Shield - Bottom Front
7	1	Side Shelf	26	1	Hopper Heat Shield - Bottom Rear
8	1	Grease Tray	27	1	Hopper Door Assembly
9	1	Grease Bucket	28	1	Hopper Assembly - Bottom
10	1	Hopper Leg Brace	29	1	Ash Bucket
11	1	Bottom Shelf	30	1	Charcoal Grate
12	2	Locking Caster	31	1	Hopper Gasket
13	2	Caster	32	1	Grease Tray Door Handle
14	1	Rear Manifold	33	1	Lower Hopper Door Latch
15	1	Front Manifold	34	1	Temperature Probe Bracket
16	1	Manifold Adapter	35	1	Temperature Probe
17	1	Lid	36	1	Grate Lifter
18	1	Body	37	3	Power Cord
19	1	Controller	38	2	Meat Probe

BEFORE ASSEMBLY READ ALL INSTRUCTIONS CAREFULLY

- Assemble on a clean flat surface.
- Recommend assembling on cardboard to avoid residue on floors or scratches.
- Gloves recommended for assembly.
- Tools needed: Phillips head screwdriver, adjustable wrench, 19mm socket wrench.
- Approximate assembly time: 1 hour, 45 minutes.
- Recommend two people assemble to increase ease and reduce assembly time.
- Actual product may differ from picture shown.
- It is possible that some assembly steps have been completed in the factory.
- Remove all printed labels before use.

DO NOT RETURN TO RETAILER!

For assembly assistance, missing or damaged parts, please contact Masterbuilt® Customer Service.

Masterbuilt ® Premier Specialty Brands, LLC, 5367 New Peachtree Road, Suite 150, Chamblee, GA 30341 www.masterbuilt.com/pages/customer-support
Masterbuilt ® Kamado Joe Europe, Lange Voorhout 86, 2514 EJ, Den Haag, Netherlands international.masterbuilt.com/pages/customer-support
Masterbuilt ® Kamado Joe UK Limited, Cheyenne House West Street, Farnham GU9 7EQ international.masterbuilt.com/pages/customer-support
Australia & New Zealand: Please contact your retailer

Parts List Spanish

NO.	QTY.	DESCRIPTION	NO.	QTY.	DESCRIPTION
1	1	Handle Tube	20	1	Front Leg Cross Brace
2	2	Lid Handle Base	21	1	Left Rear Leg
3	1	Front Shelf	22	1	Left Front Leg
4	4	Smoking/Warming Racks	23	1	Right Front Leg
5	3	Cooking Grates	24	1	Right Rear Leg
6	1	Shelf Drawer	25	1	Hopper Heat Shield - Bottom Front
7	1	Side Shelf	26	1	Hopper Heat Shield - Bottom Rear
8	1	Grease Tray	27	1	Hopper Door Assembly
9	1	Grease Bucket	28	1	Hopper Assembly - Bottom
10	1	Hopper Leg Brace	29	1	Ash Bucket
11	1	Bottom Shelf	30	1	Charcoal Grate
12	2	Locking Caster	31	1	Hopper Gasket
13	2	Caster	32	1	Grease Tray Door Handle
14	1	Rear Manifold	33	1	Lower Hopper Door Latch
15	1	Front Manifold	34	1	Temperature Probe Bracket
16	1	Manifold Adapter	35	1	Temperature Probe
17	1	Lid	36	1	Grate Lifter
18	1	Body	37	3	Power Cord
19	1	Controller	38	2	Meat Probe

BEFORE ASSEMBLY READ ALL INSTRUCTIONS CAREFULLY

- Assemble on a clean flat surface.
- Recommend assembling on cardboard to avoid residue on floors or scratches.
- Gloves recommended for assembly.
- Tools needed: Phillips head screwdriver, adjustable wrench, 19mm socket wrench.
- Approximate assembly time: 1 hour, 45 minutes.
- Recommend two people assemble to increase ease and reduce assembly time.
- Actual product may differ from picture shown.
- It is possible that some assembly steps have been completed in the factory.
- Remove all printed labels before use.

DO NOT RETURN TO RETAILER!

For assembly assistance, missing or damaged parts, please contact Masterbuilt® Customer Service.

Masterbuilt ® Premier Specialty Brands, LLC, 5367 New Peachtree Road, Suite 150, Chamblee, GA 30341 www.masterbuilt.com/pages/customer-support
Masterbuilt ® Kamado Joe Europe, Lange Voorhout 86, 2514 EJ, Den Haag, Netherlands international.masterbuilt.com/pages/customer-support
Masterbuilt ® Kamado Joe UK Limited, Cheyenne House West Street, Farnham GU9 7EQ international.masterbuilt.com/pages/customer-support
Australia & New Zealand: Please contact your retailer

Parts List Dutch

NO.	QTY.	DESCRIPTION	NO.	QTY.	DESCRIPTION
1	1	Handle Tube	20	1	Front Leg Cross Brace
2	2	Lid Handle Base	21	1	Left Rear Leg
3	1	Front Shelf	22	1	Left Front Leg
4	4	Smoking/Warming Racks	23	1	Right Front Leg
5	3	Cooking Grates	24	1	Right Rear Leg
6	1	Shelf Drawer	25	1	Hopper Heat Shield - Bottom Front
7	1	Side Shelf	26	1	Hopper Heat Shield - Bottom Rear
8	1	Grease Tray	27	1	Hopper Door Assembly
9	1	Grease Bucket	28	1	Hopper Assembly - Bottom
10	1	Hopper Leg Brace	29	1	Ash Bucket
11	1	Bottom Shelf	30	1	Charcoal Grate
12	2	Locking Caster	31	1	Hopper Gasket
13	2	Caster	32	1	Grease Tray Door Handle
14	1	Rear Manifold	33	1	Lower Hopper Door Latch
15	1	Front Manifold	34	1	Temperature Probe Bracket
16	1	Manifold Adapter	35	1	Temperature Probe
17	1	Lid	36	1	Grate Lifter
18	1	Body	37	3	Power Cord
19	1	Controller	38	2	Meat Probe

BEFORE ASSEMBLY READ ALL INSTRUCTIONS CAREFULLY

- Assemble on a clean flat surface.
- Recommend assembling on cardboard to avoid residue on floors or scratches.
- Gloves recommended for assembly.
- Tools needed: Phillips head screwdriver, adjustable wrench, 19mm socket wrench.
- Approximate assembly time: 1 hour, 45 minutes.
- Recommend two people assemble to increase ease and reduce assembly time.
- Actual product may differ from picture shown.
- It is possible that some assembly steps have been completed in the factory.
- Remove all printed labels before use.

DO NOT RETURN TO RETAILER!

For assembly assistance, missing or damaged parts, please contact Masterbuilt® Customer Service.

Masterbuilt ® Premier Specialty Brands, LLC, 5367 New Peachtree Road, Suite 150, Chamblee, GA 30341 www.masterbuilt.com/pages/customer-support
Masterbuilt ® Kamado Joe Europe, Lange Voorhout 86, 2514 EJ, Den Haag, Netherlands international.masterbuilt.com/pages/customer-support
Masterbuilt ® Kamado Joe UK Limited, Cheyenne House West Street, Farnham GU9 7EQ international.masterbuilt.com/pages/customer-support
Australia & New Zealand: Please contact your retailer

Parts List Finnish

NO.	QTY.	DESCRIPTION	NO.	QTY.	DESCRIPTION
1	1	Handle Tube	20	1	Front Leg Cross Brace
2	2	Lid Handle Base	21	1	Left Rear Leg
3	1	Front Shelf	22	1	Left Front Leg
4	4	Smoking/Warming Racks	23	1	Right Front Leg
5	3	Cooking Grates	24	1	Right Rear Leg
6	1	Shelf Drawer	25	1	Hopper Heat Shield - Bottom Front
7	1	Side Shelf	26	1	Hopper Heat Shield - Bottom Rear
8	1	Grease Tray	27	1	Hopper Door Assembly
9	1	Grease Bucket	28	1	Hopper Assembly - Bottom
10	1	Hopper Leg Brace	29	1	Ash Bucket
11	1	Bottom Shelf	30	1	Charcoal Grate
12	2	Locking Caster	31	1	Hopper Gasket
13	2	Caster	32	1	Grease Tray Door Handle
14	1	Rear Manifold	33	1	Lower Hopper Door Latch
15	1	Front Manifold	34	1	Temperature Probe Bracket
16	1	Manifold Adapter	35	1	Temperature Probe
17	1	Lid	36	1	Grate Lifter
18	1	Body	37	3	Power Cord
19	1	Controller	38	2	Meat Probe

BEFORE ASSEMBLY READ ALL INSTRUCTIONS CAREFULLY

- Assemble on a clean flat surface.
- Recommend assembling on cardboard to avoid residue on floors or scratches.
- Gloves recommended for assembly.
- Tools needed: Phillips head screwdriver, adjustable wrench, 19mm socket wrench.
- Approximate assembly time: 1 hour, 45 minutes.
- Recommend two people assemble to increase ease and reduce assembly time.
- Actual product may differ from picture shown.
- It is possible that some assembly steps have been completed in the factory.
- Remove all printed labels before use.

DO NOT RETURN TO RETAILER!

For assembly assistance, missing or damaged parts, please contact Masterbuilt® Customer Service.

Masterbuilt ® Premier Specialty Brands, LLC, 5367 New Peachtree Road, Suite 150, Chamblee, GA 30341 www.masterbuilt.com/pages/customer-support
Masterbuilt ® Kamado Joe Europe, Lange Voorhout 86, 2514 EJ, Den Haag, Netherlands international.masterbuilt.com/pages/customer-support
Masterbuilt ® Kamado Joe UK Limited, Cheyenne House West Street, Farnham GU9 7EQ international.masterbuilt.com/pages/customer-support
Australia & New Zealand: Please contact your retailer

Parts List German

NO.	QTY.	DESCRIPTION	NO.	QTY.	DESCRIPTION
1	1	Handle Tube	20	1	Front Leg Cross Brace
2	2	Lid Handle Base	21	1	Left Rear Leg
3	1	Front Shelf	22	1	Left Front Leg
4	4	Smoking/Warming Racks	23	1	Right Front Leg
5	3	Cooking Grates	24	1	Right Rear Leg
6	1	Shelf Drawer	25	1	Hopper Heat Shield - Bottom Front
7	1	Side Shelf	26	1	Hopper Heat Shield - Bottom Rear
8	1	Grease Tray	27	1	Hopper Door Assembly
9	1	Grease Bucket	28	1	Hopper Assembly - Bottom
10	1	Hopper Leg Brace	29	1	Ash Bucket
11	1	Bottom Shelf	30	1	Charcoal Grate
12	2	Locking Caster	31	1	Hopper Gasket
13	2	Caster	32	1	Grease Tray Door Handle
14	1	Rear Manifold	33	1	Lower Hopper Door Latch
15	1	Front Manifold	34	1	Temperature Probe Bracket
16	1	Manifold Adapter	35	1	Temperature Probe
17	1	Lid	36	1	Grate Lifter
18	1	Body	37	3	Power Cord
19	1	Controller	38	2	Meat Probe

BEFORE ASSEMBLY READ ALL INSTRUCTIONS CAREFULLY

- Assemble on a clean flat surface.
- Recommend assembling on cardboard to avoid residue on floors or scratches.
- Gloves recommended for assembly.
- Tools needed: Phillips head screwdriver, adjustable wrench, 19mm socket wrench.
- Approximate assembly time: 1 hour, 45 minutes.
- Recommend two people assemble to increase ease and reduce assembly time.
- Actual product may differ from picture shown.
- It is possible that some assembly steps have been completed in the factory.
- Remove all printed labels before use.

DO NOT RETURN TO RETAILER!

For assembly assistance, missing or damaged parts, please contact Masterbuilt® Customer Service.

Masterbuilt ® Premier Specialty Brands, LLC, 5367 New Peachtree Road, Suite 150, Chamblee, GA 30341 www.masterbuilt.com/pages/customer-support
Masterbuilt ® Kamado Joe Europe, Lange Voorhout 86, 2514 EJ, Den Haag, Netherlands international.masterbuilt.com/pages/customer-support
Masterbuilt ® Kamado Joe UK Limited, Cheyenne House West Street, Farnham GU9 7EQ international.masterbuilt.com/pages/customer-support
Australia & New Zealand: Please contact your retailer

Parts List Hungarian

NO.	QTY.	DESCRIPTION	NO.	QTY.	DESCRIPTION
1	1	Handle Tube	20	1	Front Leg Cross Brace
2	2	Lid Handle Base	21	1	Left Rear Leg
3	1	Front Shelf	22	1	Left Front Leg
4	4	Smoking/Warming Racks	23	1	Right Front Leg
5	3	Cooking Grates	24	1	Right Rear Leg
6	1	Shelf Drawer	25	1	Hopper Heat Shield - Bottom Front
7	1	Side Shelf	26	1	Hopper Heat Shield - Bottom Rear
8	1	Grease Tray	27	1	Hopper Door Assembly
9	1	Grease Bucket	28	1	Hopper Assembly - Bottom
10	1	Hopper Leg Brace	29	1	Ash Bucket
11	1	Bottom Shelf	30	1	Charcoal Grate
12	2	Locking Caster	31	1	Hopper Gasket
13	2	Caster	32	1	Grease Tray Door Handle
14	1	Rear Manifold	33	1	Lower Hopper Door Latch
15	1	Front Manifold	34	1	Temperature Probe Bracket
16	1	Manifold Adapter	35	1	Temperature Probe
17	1	Lid	36	1	Grate Lifter
18	1	Body	37	3	Power Cord
19	1	Controller	38	2	Meat Probe

BEFORE ASSEMBLY READ ALL INSTRUCTIONS CAREFULLY

- Assemble on a clean flat surface.
- Recommend assembling on cardboard to avoid residue on floors or scratches.
- Gloves recommended for assembly.
- Tools needed: Phillips head screwdriver, adjustable wrench, 19mm socket wrench.
- Approximate assembly time: 1 hour, 45 minutes.
- Recommend two people assemble to increase ease and reduce assembly time.
- Actual product may differ from picture shown.
- It is possible that some assembly steps have been completed in the factory.
- Remove all printed labels before use.

DO NOT RETURN TO RETAILER!

For assembly assistance, missing or damaged parts, please contact Masterbuilt® Customer Service.

Masterbuilt ® Premier Specialty Brands, LLC, 5367 New Peachtree Road, Suite 150, Chamblee, GA 30341 www.masterbuilt.com/pages/customer-support
Masterbuilt ® Kamado Joe Europe, Lange Voorhout 86, 2514 EJ, Den Haag, Netherlands international.masterbuilt.com/pages/customer-support
Masterbuilt ® Kamado Joe UK Limited, Cheyenne House West Street, Farnham GU9 7EQ international.masterbuilt.com/pages/customer-support
Australia & New Zealand: Please contact your retailer

Parts List Italian

NO.	QTY.	DESCRIPTION	NO.	QTY.	DESCRIPTION
1	1	Handle Tube	20	1	Front Leg Cross Brace
2	2	Lid Handle Base	21	1	Left Rear Leg
3	1	Front Shelf	22	1	Left Front Leg
4	4	Smoking/Warming Racks	23	1	Right Front Leg
5	3	Cooking Grates	24	1	Right Rear Leg
6	1	Shelf Drawer	25	1	Hopper Heat Shield - Bottom Front
7	1	Side Shelf	26	1	Hopper Heat Shield - Bottom Rear
8	1	Grease Tray	27	1	Hopper Door Assembly
9	1	Grease Bucket	28	1	Hopper Assembly - Bottom
10	1	Hopper Leg Brace	29	1	Ash Bucket
11	1	Bottom Shelf	30	1	Charcoal Grate
12	2	Locking Caster	31	1	Hopper Gasket
13	2	Caster	32	1	Grease Tray Door Handle
14	1	Rear Manifold	33	1	Lower Hopper Door Latch
15	1	Front Manifold	34	1	Temperature Probe Bracket
16	1	Manifold Adapter	35	1	Temperature Probe
17	1	Lid	36	1	Grate Lifter
18	1	Body	37	3	Power Cord
19	1	Controller	38	2	Meat Probe

BEFORE ASSEMBLY READ ALL INSTRUCTIONS CAREFULLY

- Assemble on a clean flat surface.
- Recommend assembling on cardboard to avoid residue on floors or scratches.
- Gloves recommended for assembly.
- Tools needed: Phillips head screwdriver, adjustable wrench, 19mm socket wrench.
- Approximate assembly time: 1 hour, 45 minutes.
- Recommend two people assemble to increase ease and reduce assembly time.
- Actual product may differ from picture shown.
- It is possible that some assembly steps have been completed in the factory.
- Remove all printed labels before use.

DO NOT RETURN TO RETAILER!

For assembly assistance, missing or damaged parts, please contact Masterbuilt® Customer Service.

Masterbuilt ® Premier Specialty Brands, LLC, 5367 New Peachtree Road, Suite 150, Chamblee, GA 30341 www.masterbuilt.com/pages/customer-support
Masterbuilt ® Kamado Joe Europe, Lange Voorhout 86, 2514 EJ, Den Haag, Netherlands international.masterbuilt.com/pages/customer-support
Masterbuilt ® Kamado Joe UK Limited, Cheyenne House West Street, Farnham GU9 7EQ international.masterbuilt.com/pages/customer-support
Australia & New Zealand: Please contact your retailer

Parts List Norwegian

NO.	QTY.	DESCRIPTION	NO.	QTY.	DESCRIPTION
1	1	Handle Tube	20	1	Front Leg Cross Brace
2	2	Lid Handle Base	21	1	Left Rear Leg
3	1	Front Shelf	22	1	Left Front Leg
4	4	Smoking/Warming Racks	23	1	Right Front Leg
5	3	Cooking Grates	24	1	Right Rear Leg
6	1	Shelf Drawer	25	1	Hopper Heat Shield - Bottom Front
7	1	Side Shelf	26	1	Hopper Heat Shield - Bottom Rear
8	1	Grease Tray	27	1	Hopper Door Assembly
9	1	Grease Bucket	28	1	Hopper Assembly - Bottom
10	1	Hopper Leg Brace	29	1	Ash Bucket
11	1	Bottom Shelf	30	1	Charcoal Grate
12	2	Locking Caster	31	1	Hopper Gasket
13	2	Caster	32	1	Grease Tray Door Handle
14	1	Rear Manifold	33	1	Lower Hopper Door Latch
15	1	Front Manifold	34	1	Temperature Probe Bracket
16	1	Manifold Adapter	35	1	Temperature Probe
17	1	Lid	36	1	Grate Lifter
18	1	Body	37	3	Power Cord
19	1	Controller	38	2	Meat Probe

BEFORE ASSEMBLY READ ALL INSTRUCTIONS CAREFULLY

- Assemble on a clean flat surface.
- Recommend assembling on cardboard to avoid residue on floors or scratches.
- Gloves recommended for assembly.
- Tools needed: Phillips head screwdriver, adjustable wrench, 19mm socket wrench.
- Approximate assembly time: 1 hour, 45 minutes.
- Recommend two people assemble to increase ease and reduce assembly time.
- Actual product may differ from picture shown.
- It is possible that some assembly steps have been completed in the factory.
- Remove all printed labels before use.

DO NOT RETURN TO RETAILER!

For assembly assistance, missing or damaged parts, please contact Masterbuilt® Customer Service.

Masterbuilt ® Premier Specialty Brands, LLC, 5367 New Peachtree Road, Suite 150, Chamblee, GA 30341 www.masterbuilt.com/pages/customer-support
Masterbuilt ® Kamado Joe Europe, Lange Voorhout 86, 2514 EJ, Den Haag, Netherlands international.masterbuilt.com/pages/customer-support
Masterbuilt ® Kamado Joe UK Limited, Cheyenne House West Street, Farnham GU9 7EQ international.masterbuilt.com/pages/customer-support
Australia & New Zealand: Please contact your retailer

Parts List Polish

NO.	QTY.	DESCRIPTION	NO.	QTY.	DESCRIPTION
1	1	Handle Tube	20	1	Front Leg Cross Brace
2	2	Lid Handle Base	21	1	Left Rear Leg
3	1	Front Shelf	22	1	Left Front Leg
4	4	Smoking/Warming Racks	23	1	Right Front Leg
5	3	Cooking Grates	24	1	Right Rear Leg
6	1	Shelf Drawer	25	1	Hopper Heat Shield - Bottom Front
7	1	Side Shelf	26	1	Hopper Heat Shield - Bottom Rear
8	1	Grease Tray	27	1	Hopper Door Assembly
9	1	Grease Bucket	28	1	Hopper Assembly - Bottom
10	1	Hopper Leg Brace	29	1	Ash Bucket
11	1	Bottom Shelf	30	1	Charcoal Grate
12	2	Locking Caster	31	1	Hopper Gasket
13	2	Caster	32	1	Grease Tray Door Handle
14	1	Rear Manifold	33	1	Lower Hopper Door Latch
15	1	Front Manifold	34	1	Temperature Probe Bracket
16	1	Manifold Adapter	35	1	Temperature Probe
17	1	Lid	36	1	Grate Lifter
18	1	Body	37	3	Power Cord
19	1	Controller	38	2	Meat Probe

BEFORE ASSEMBLY READ ALL INSTRUCTIONS CAREFULLY

- Assemble on a clean flat surface.
- Recommend assembling on cardboard to avoid residue on floors or scratches.
- Gloves recommended for assembly.
- Tools needed: Phillips head screwdriver, adjustable wrench, 19mm socket wrench.
- Approximate assembly time: 1 hour, 45 minutes.
- Recommend two people assemble to increase ease and reduce assembly time.
- Actual product may differ from picture shown.
- It is possible that some assembly steps have been completed in the factory.
- Remove all printed labels before use.

DO NOT RETURN TO RETAILER!

For assembly assistance, missing or damaged parts, please contact Masterbuilt® Customer Service.

Masterbuilt ® Premier Specialty Brands, LLC, 5367 New Peachtree Road, Suite 150, Chamblee, GA 30341 www.masterbuilt.com/pages/customer-support
Masterbuilt ® Kamado Joe Europe, Lange Voorhout 86, 2514 EJ, Den Haag, Netherlands international.masterbuilt.com/pages/customer-support
Masterbuilt ® Kamado Joe UK Limited, Cheyenne House West Street, Farnham GU9 7EQ international.masterbuilt.com/pages/customer-support
Australia & New Zealand: Please contact your retailer

Parts List Russian

NO.	QTY.	DESCRIPTION	NO.	QTY.	DESCRIPTION
1	1	Handle Tube	20	1	Front Leg Cross Brace
2	2	Lid Handle Base	21	1	Left Rear Leg
3	1	Front Shelf	22	1	Left Front Leg
4	4	Smoking/Warming Racks	23	1	Right Front Leg
5	3	Cooking Grates	24	1	Right Rear Leg
6	1	Shelf Drawer	25	1	Hopper Heat Shield - Bottom Front
7	1	Side Shelf	26	1	Hopper Heat Shield - Bottom Rear
8	1	Grease Tray	27	1	Hopper Door Assembly
9	1	Grease Bucket	28	1	Hopper Assembly - Bottom
10	1	Hopper Leg Brace	29	1	Ash Bucket
11	1	Bottom Shelf	30	1	Charcoal Grate
12	2	Locking Caster	31	1	Hopper Gasket
13	2	Caster	32	1	Grease Tray Door Handle
14	1	Rear Manifold	33	1	Lower Hopper Door Latch
15	1	Front Manifold	34	1	Temperature Probe Bracket
16	1	Manifold Adapter	35	1	Temperature Probe
17	1	Lid	36	1	Grate Lifter
18	1	Body	37	3	Power Cord
19	1	Controller	38	2	Meat Probe

BEFORE ASSEMBLY READ ALL INSTRUCTIONS CAREFULLY

- Assemble on a clean flat surface.
- Recommend assembling on cardboard to avoid residue on floors or scratches.
- Gloves recommended for assembly.
- Tools needed: Phillips head screwdriver, adjustable wrench, 19mm socket wrench.
- Approximate assembly time: 1 hour, 45 minutes.
- Recommend two people assemble to increase ease and reduce assembly time.
- Actual product may differ from picture shown.
- It is possible that some assembly steps have been completed in the factory.
- Remove all printed labels before use.

DO NOT RETURN TO RETAILER!

For assembly assistance, missing or damaged parts, please contact Masterbuilt® Customer Service.

Masterbuilt ® Premier Specialty Brands, LLC, 5367 New Peachtree Road, Suite 150, Chamblee, GA 30341 www.masterbuilt.com/pages/customer-support
Masterbuilt ® Kamado Joe Europe, Lange Voorhout 86, 2514 EJ, Den Haag, Netherlands international.masterbuilt.com/pages/customer-support
Masterbuilt ® Kamado Joe UK Limited, Cheyenne House West Street, Farnham GU9 7EQ international.masterbuilt.com/pages/customer-support
Australia & New Zealand: Please contact your retailer

Parts List Swedish

NO.	QTY.	DESCRIPTION	NO.	QTY.	DESCRIPTION
1	1	Handle Tube	20	1	Front Leg Cross Brace
2	2	Lid Handle Base	21	1	Left Rear Leg
3	1	Front Shelf	22	1	Left Front Leg
4	4	Smoking/Warming Racks	23	1	Right Front Leg
5	3	Cooking Grates	24	1	Right Rear Leg
6	1	Shelf Drawer	25	1	Hopper Heat Shield - Bottom Front
7	1	Side Shelf	26	1	Hopper Heat Shield - Bottom Rear
8	1	Grease Tray	27	1	Hopper Door Assembly
9	1	Grease Bucket	28	1	Hopper Assembly - Bottom
10	1	Hopper Leg Brace	29	1	Ash Bucket
11	1	Bottom Shelf	30	1	Charcoal Grate
12	2	Locking Caster	31	1	Hopper Gasket
13	2	Caster	32	1	Grease Tray Door Handle
14	1	Rear Manifold	33	1	Lower Hopper Door Latch
15	1	Front Manifold	34	1	Temperature Probe Bracket
16	1	Manifold Adapter	35	1	Temperature Probe
17	1	Lid	36	1	Grate Lifter
18	1	Body	37	3	Power Cord
19	1	Controller	38	2	Meat Probe

BEFORE ASSEMBLY READ ALL INSTRUCTIONS CAREFULLY

- Assemble on a clean flat surface.
- Recommend assembling on cardboard to avoid residue on floors or scratches.
- Gloves recommended for assembly.
- Tools needed: Phillips head screwdriver, adjustable wrench, 19mm socket wrench.
- Approximate assembly time: 1 hour, 45 minutes.
- Recommend two people assemble to increase ease and reduce assembly time.
- Actual product may differ from picture shown.
- It is possible that some assembly steps have been completed in the factory.
- Remove all printed labels before use.

DO NOT RETURN TO RETAILER!

For assembly assistance, missing or damaged parts, please contact Masterbuilt® Customer Service.

Masterbuilt ® Premier Specialty Brands, LLC, 5367 New Peachtree Road, Suite 150, Chamblee, GA 30341 www.masterbuilt.com/pages/customer-support
Masterbuilt ® Kamado Joe Europe, Lange Voorhout 86, 2514 EJ, Den Haag, Netherlands international.masterbuilt.com/pages/customer-support
Masterbuilt ® Kamado Joe UK Limited, Cheyenne House West Street, Farnham GU9 7EQ international.masterbuilt.com/pages/customer-support
Australia & New Zealand: Please contact your retailer

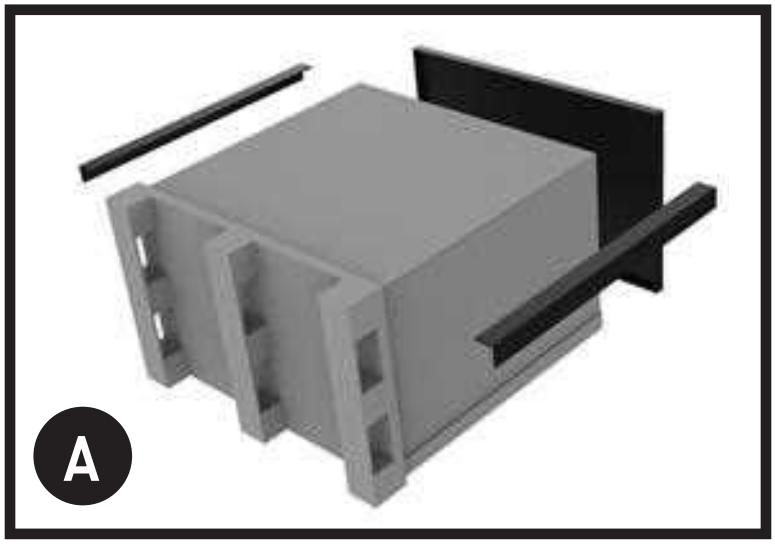
A

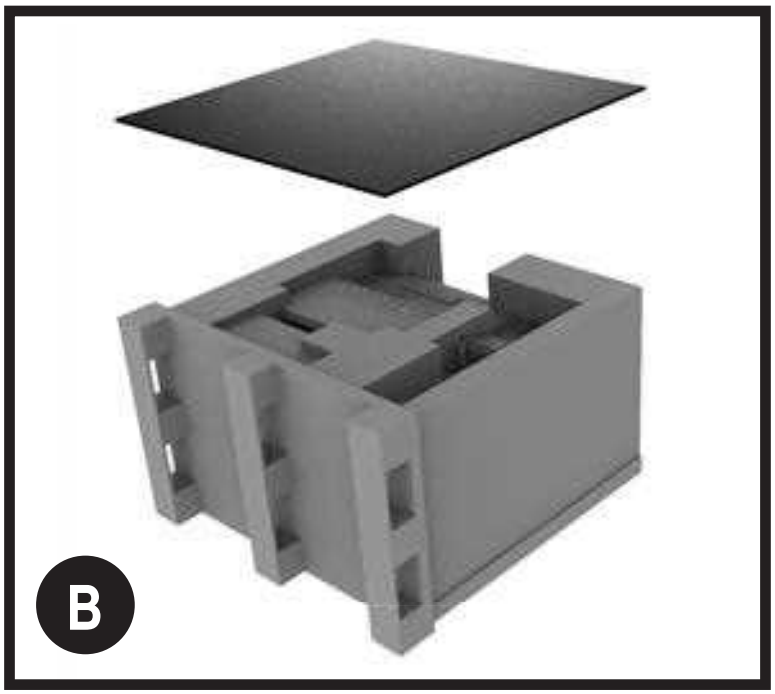
B

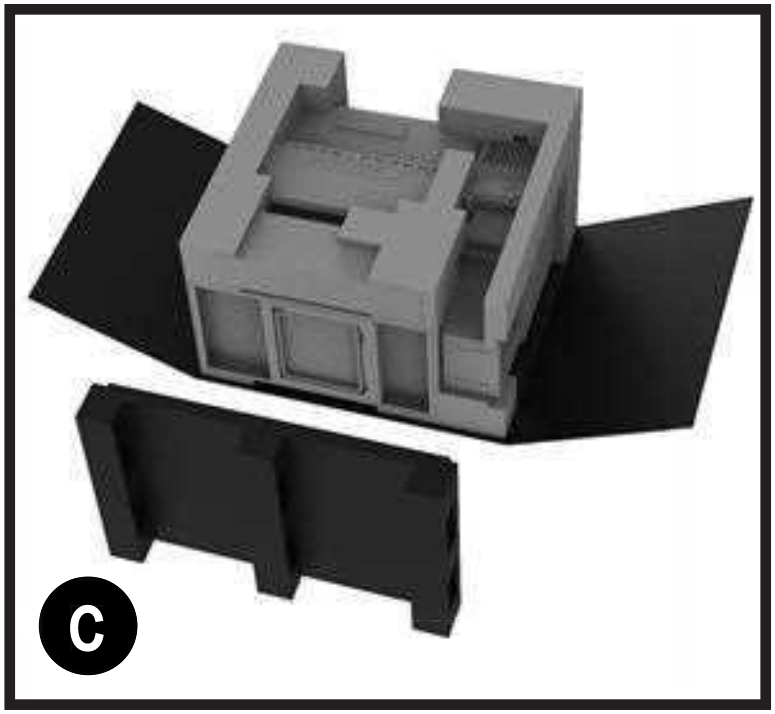
C

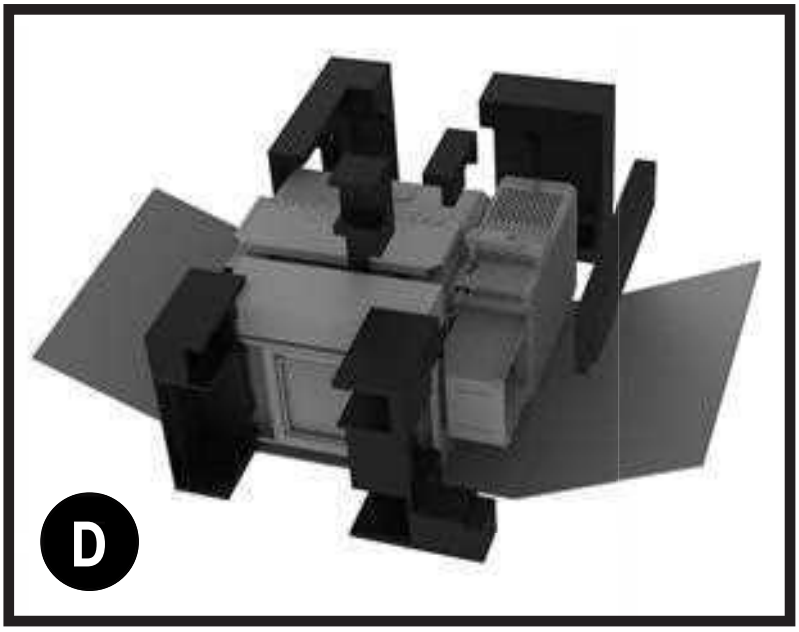
D

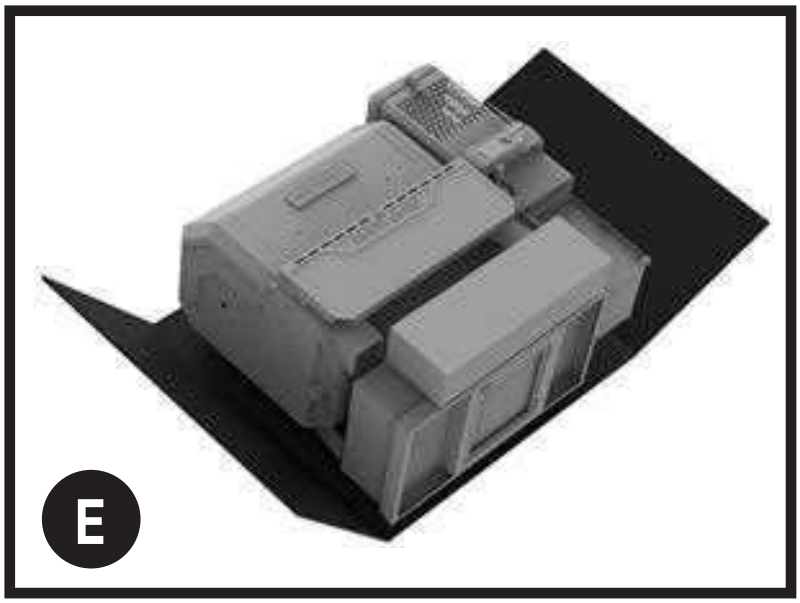
E

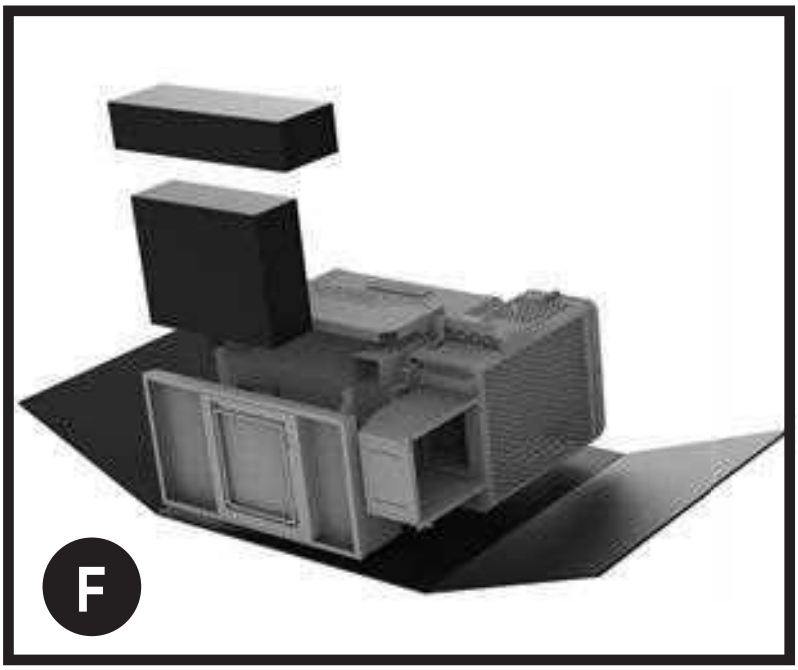
F

1

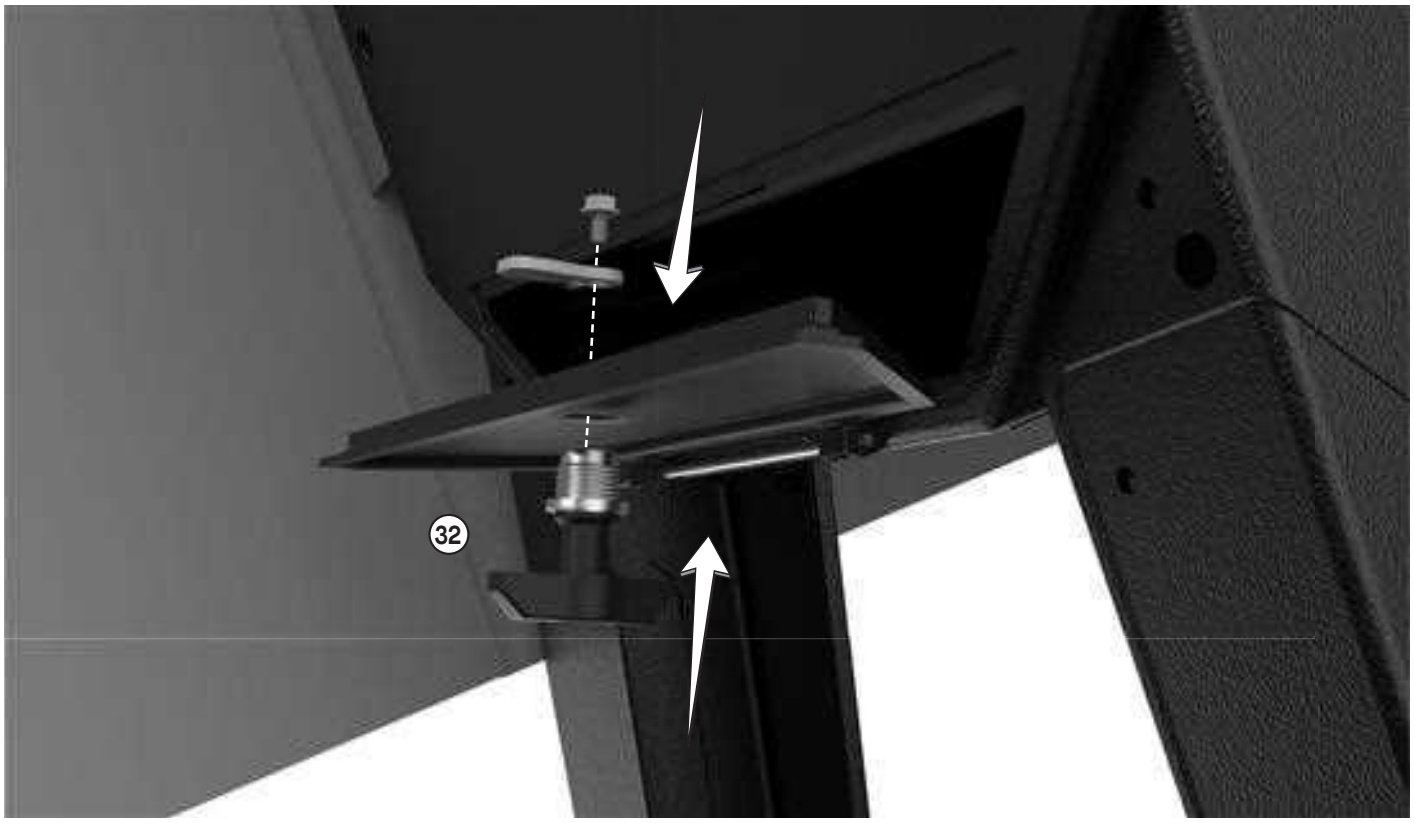

2

A
X8

D
X8

E
X8

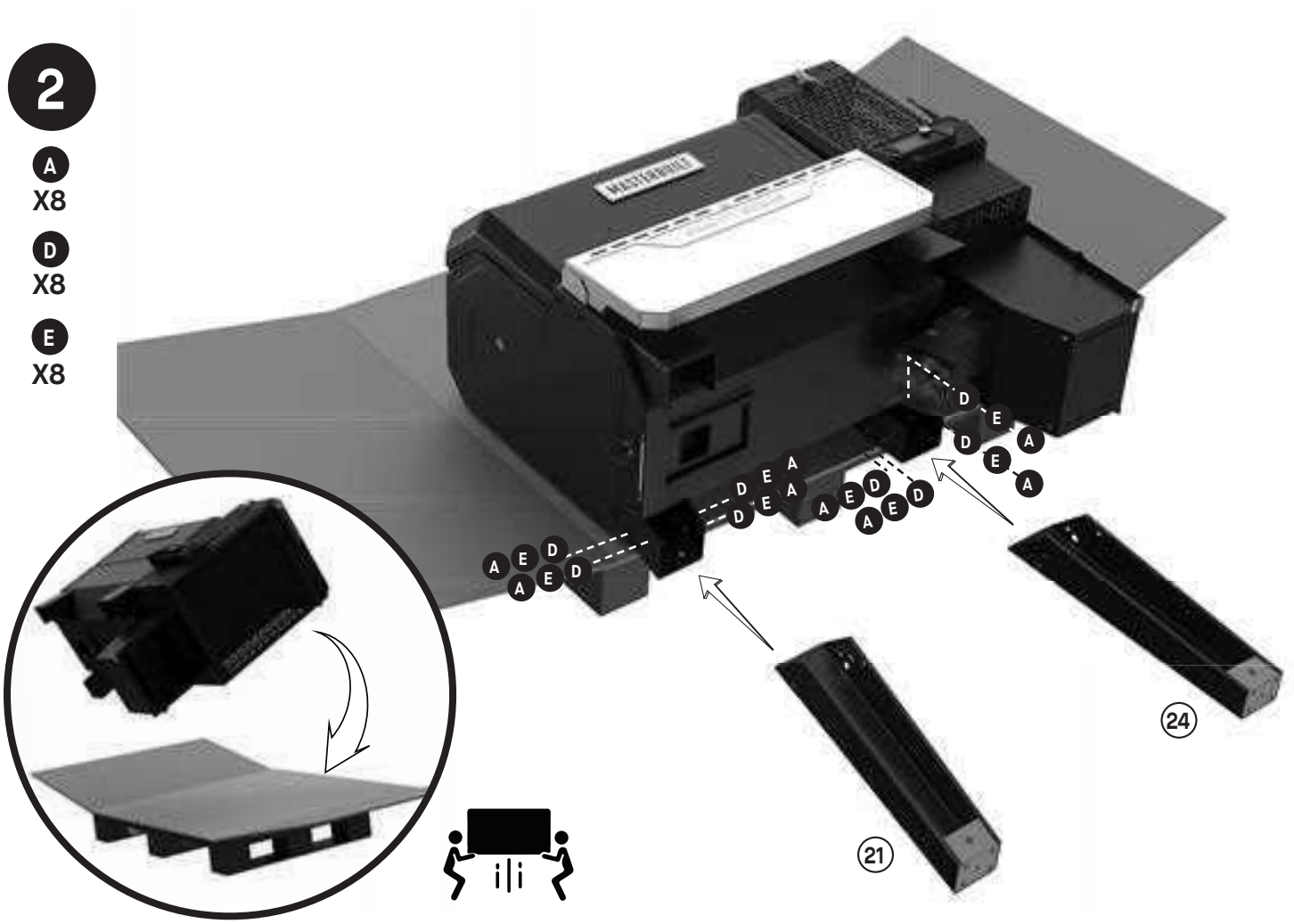

3

A
X6

D
X6

E
X6

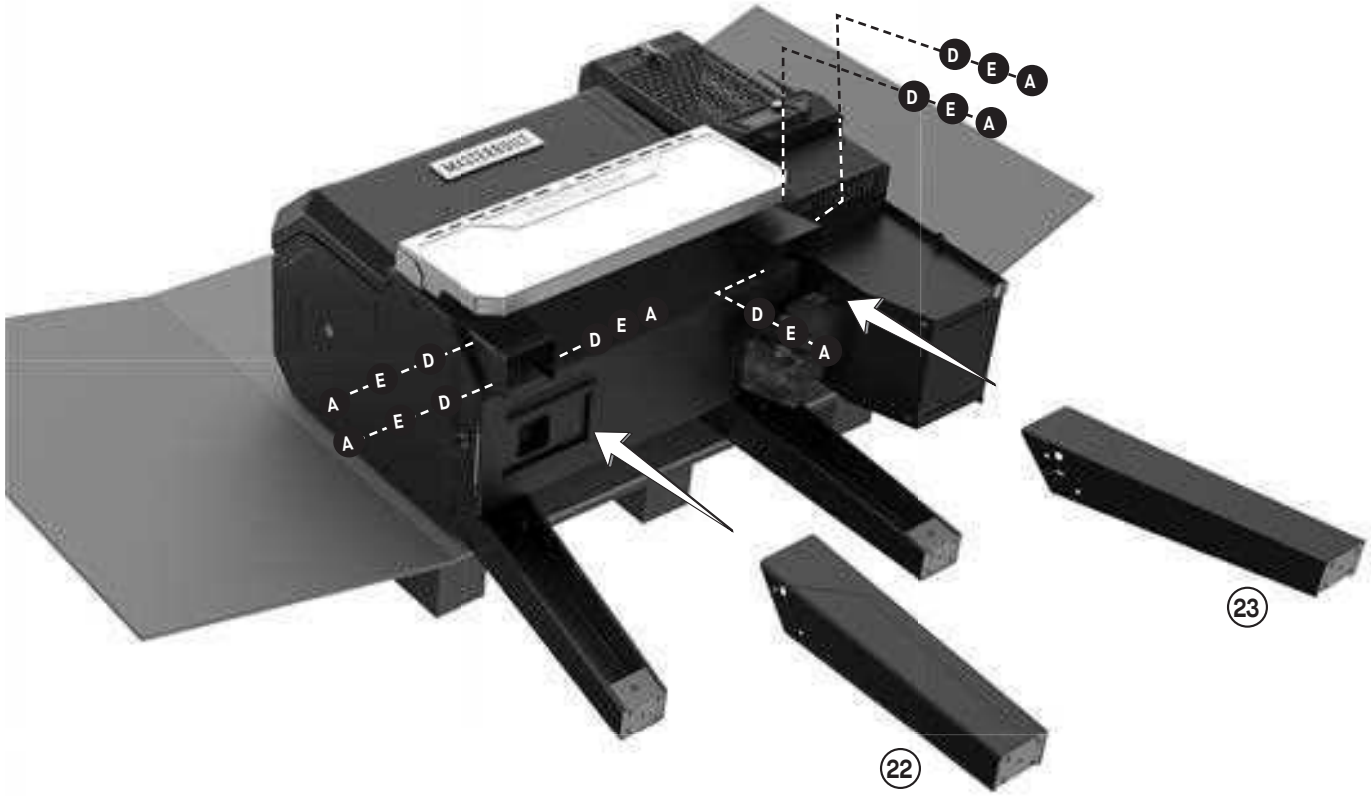

4

A
X2

D
X2

E
X2

5

6

A
X4

F
X4

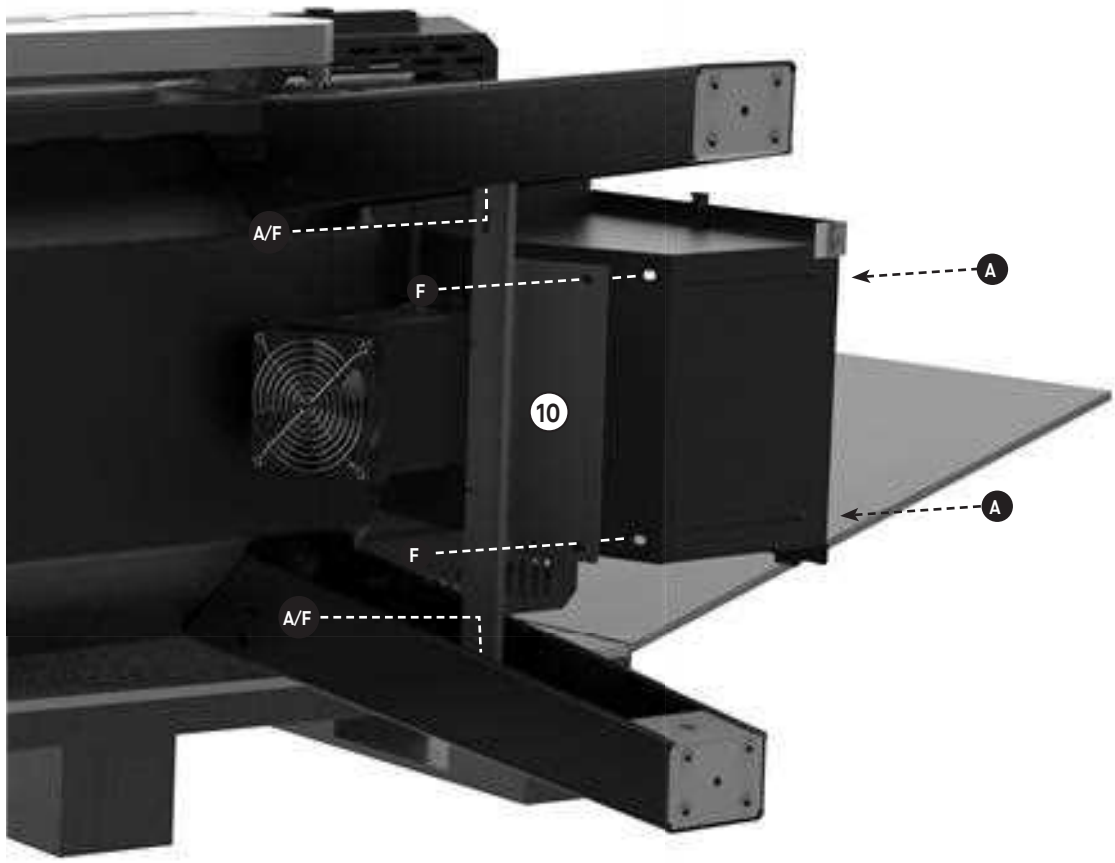

7

B
X4

D
X4

E
X4

8

B
X1

F
X1

9

B
X16

D
X16

E
X16

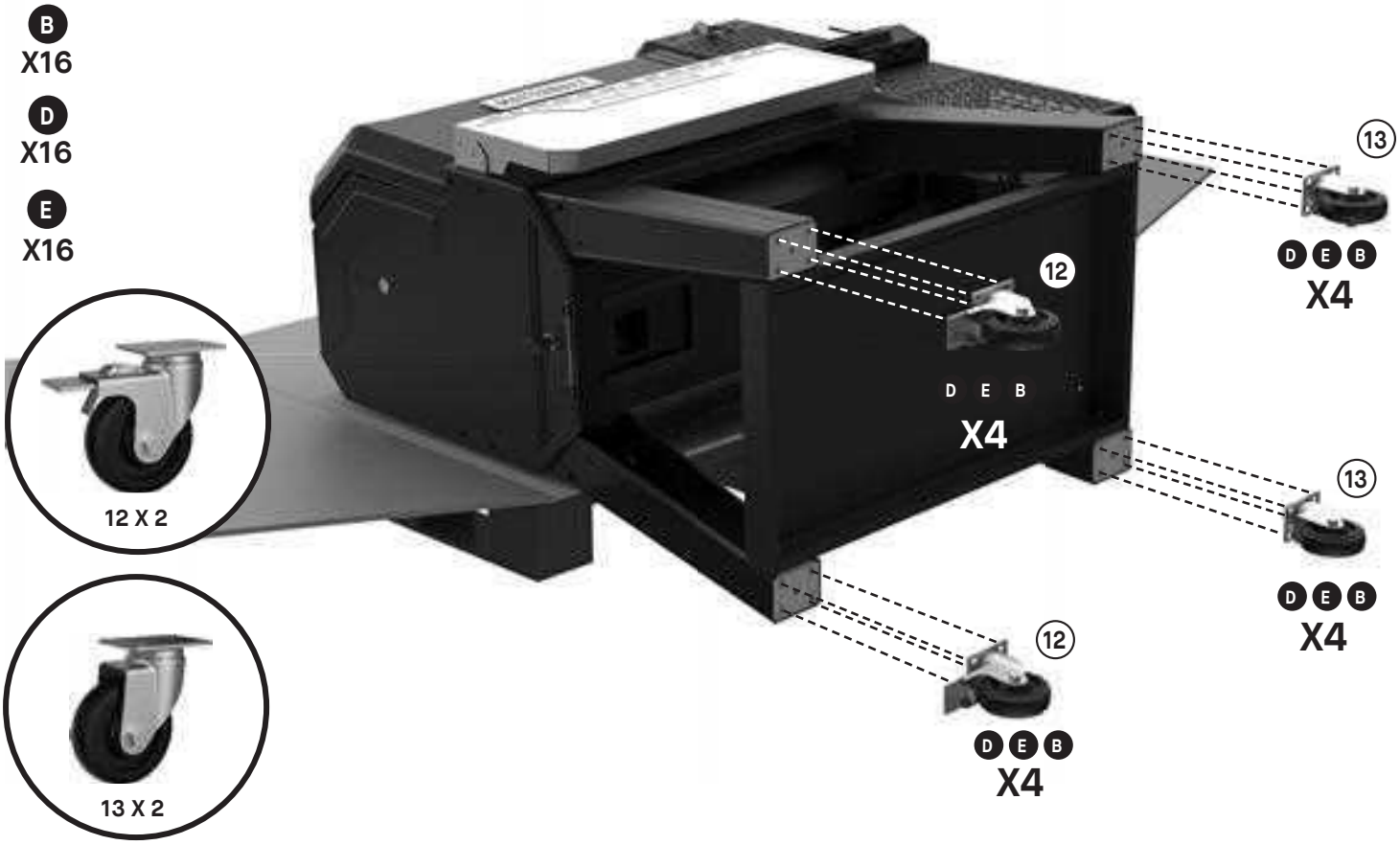

10

11

B
X1

F
X1

G
X1

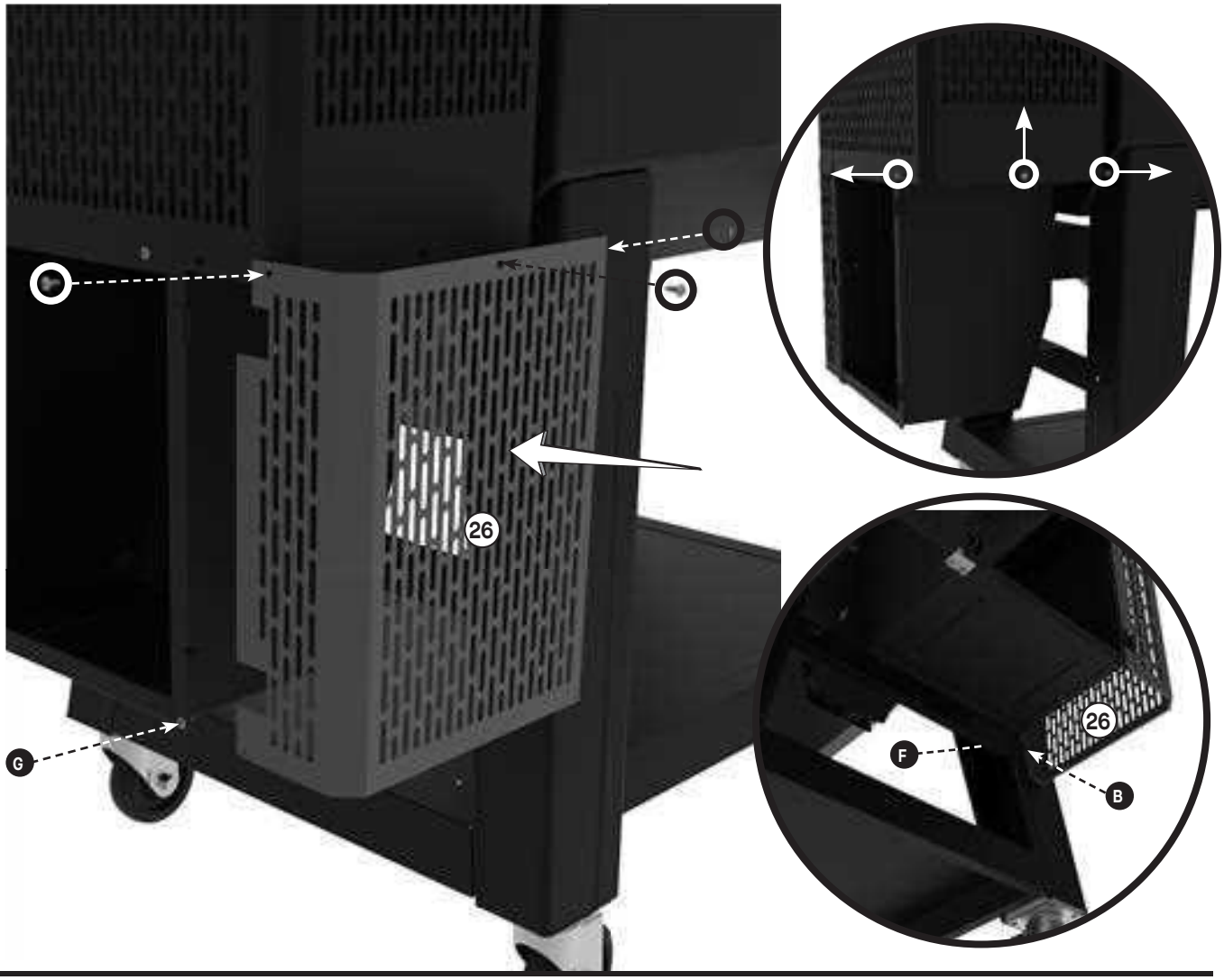

12

D
X2

E
X2

H
X2

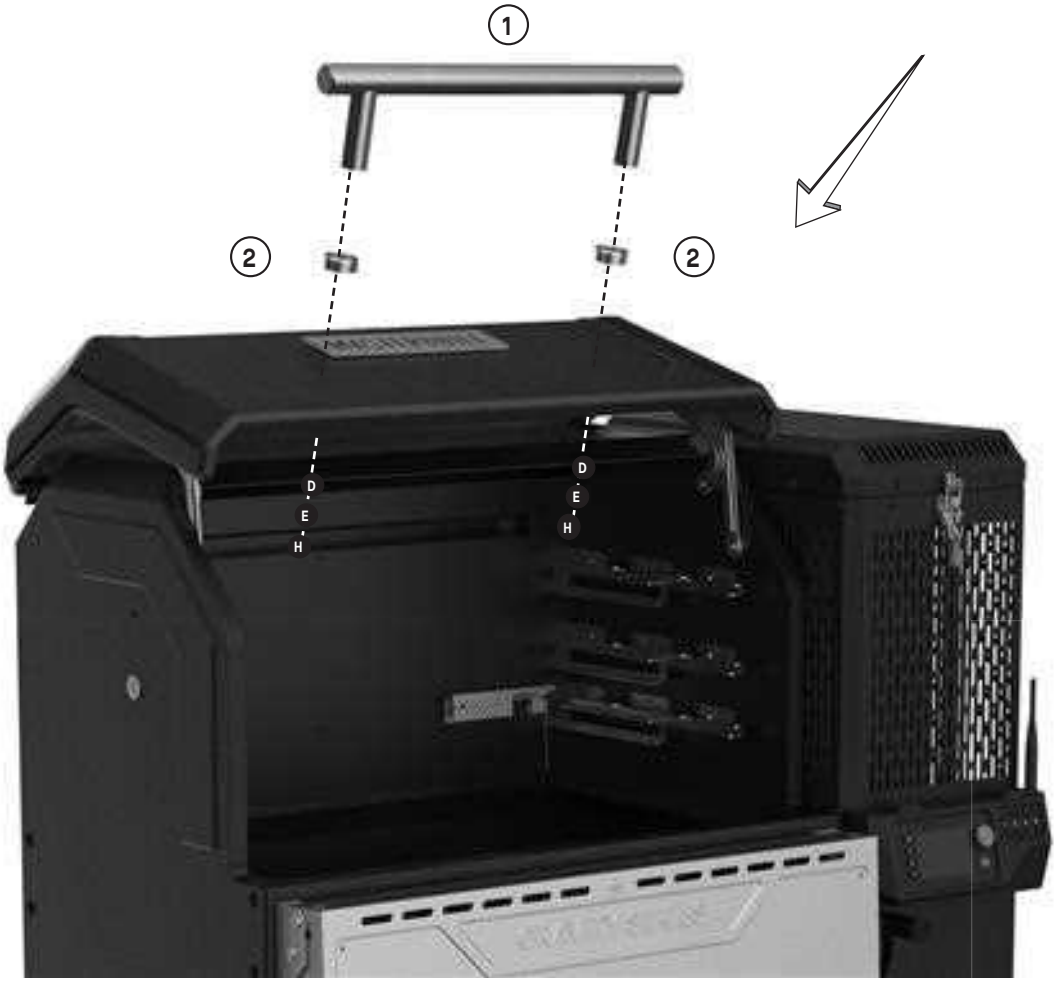

13

D
X4

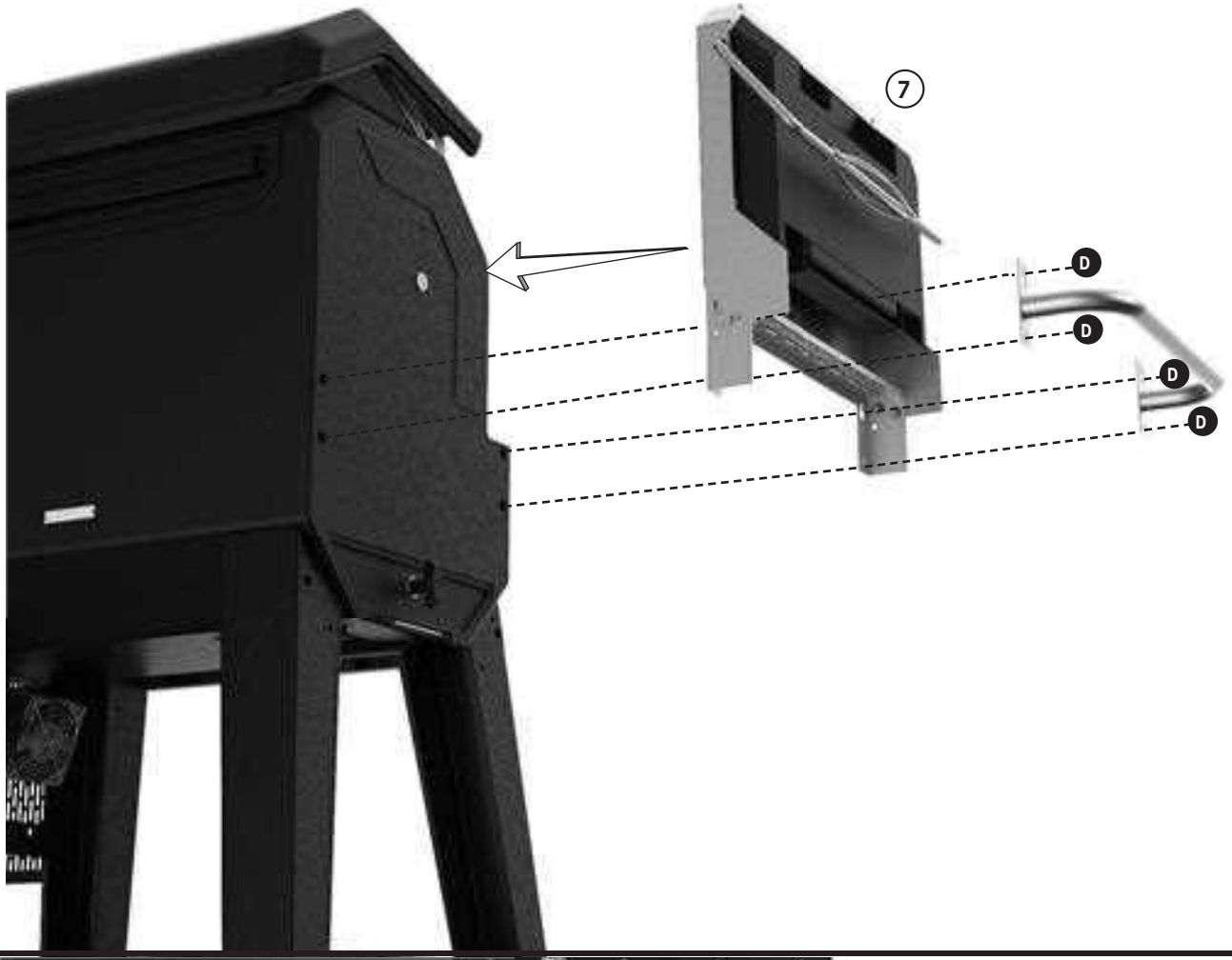

14

15

I
X4

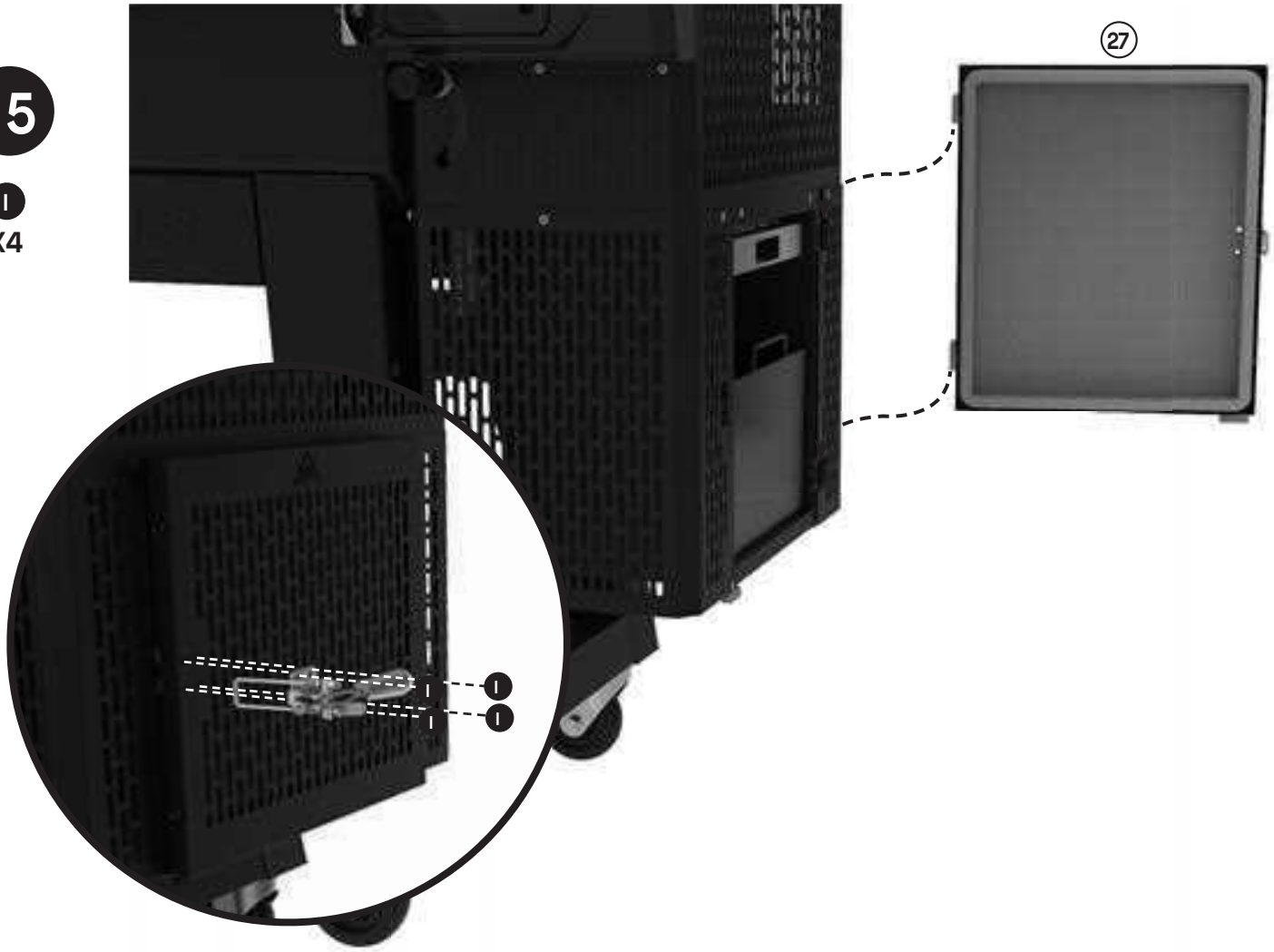

16

17

18

19

20

21

22

FOR OUTDOOR USE ONLY. NOT FOR COMMERCIAL USE.

WARNING

- This manual contains important information necessary for the proper assembly and safe use of the appliance.
- Read and follow all warnings and instructions before assembling and using the appliance.
- Keep this manual for future reference.

CARBON MONOXIDE HAZARD

Failure to follow these instruc ons could result in fire, explosion or burn hazard which could cause property damage, personal injury, or death.

- Burning wood chips, wood chunks, wood pellets, charcoal and propane gives off carbon monoxide, which has no odor and can cause death.
- DO NOT burn wood chips, wood chunks, wood pellets, charcoal or propane inside homes, vehicles, tents, garages or any enclosed areas.
- Do not use the barbecue in a confined and/or habitable space e.g. houses, tents, caravans, motor homes, boats. Danger of carbon monoxide poisoning fatality.
- USE ONLY OUTDOORS where it is well ventilated.
- **FOLLOW THESE GUIDELINES TO PREVENT THIS COLORLESS, ODORLESS GAS FROM POISONING YOU, YOUR FAMILY OR OTHERS.**
  - Know the symptoms of carbon monoxide poisoning: headache, dizziness, weakness, nausea, vomiting, sleepiness, and confusion. Carbon monoxide reduces the blood's ability to carry oxygen. Low blood oxygen levels can result in loss of consciousness and death.
  - See a doctor if you or others develop cold or flu-like symptoms while cooking or in the vicinity of this appliance. Carbon monoxide poisoning, which can easily be mistaken for a cold or flu, is often detected too late.
  - Alcohol consumption and drug use increase the effects of carbon monoxide poisoning.
  - *Carbon monoxide is especially toxic to mother and child during pregnancy, infants, the elderly, smokers, and people with blood or circulatory system problems, such as anemia, or heart disease.*

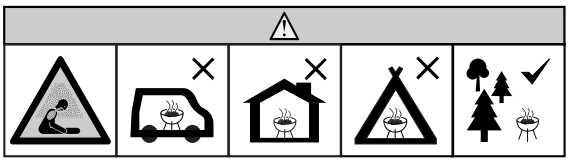

WARNINGS AND IMPORTANT SAFEGUARDS

READ ALL INSTRUCTIONS

- Do not leave grill unattended.
- Grill is for OUTDOOR HOUSEHOLD USE ONLY.
- Do not use indoors!
- Use charcoal for fuel only.
- Always use grill in accordance with all applicable local, state, and federal fire codes.
- Potential damage to grill or harm to user may result from failure to follow warnings.
- Never use inside enclosed areas such as patios, garages, buildings or tents.
- Never use inside recreational vehicles or on boats.
- Never operate grill under overhead construction such as roof coverings, carports, awnings, or overhangs. (SEE STRUCTURAL PROXIMITY REQUIREMENTS)
- Keep appliance clear and free from combustible materials such as gasoline and other flammable vapors and liquids.
- Use grill on a level, non-combustible, stable surface such as dirt, concrete, brick or rock. An asphalt surface (blacktop) may not be acceptable for this purpose.
- Do not use grill on wooden or flammable surfaces.
- Grill MUST be on the ground. Do not place grill on tables or counters. DO NOT move grill across uneven surfaces.
- Grill should only be rolled on smooth surface.
- Grill should never be rolled up/down stairs or uneven surface.
- Never use grill as a heater (READ CARBON MONOXIDE HAZARD).

WARNINGS AND IMPORTANT SAFEGUARDS

- Never use appliance for anything other than its intended use. This grill is NOT for commercial use.
- Keep a fire extinguisher accessible at all times while operating the grill.
- When cooking with oil or grease, have a type BC or ABC fire extinguisher readily available.
- In the event of an oil or grease fire do not attempt to extinguish with water. Immediately call the fire department. A type BC or ABC fire extinguisher may, in some circumstances, contain the fire.
- Before each use check all nuts, screws and bolts to make sure they are tight and secure.
- Use of alcohol, prescription, or non-prescription drugs may impair user's ability to properly assemble or safely operate grill.
- Keep children and pets away from grill at all times. Do NOT allow children to use grill. Close supervision is necessary when children or pets are in the area where grill is being used.
- The appliance is not to be used by persons (including children) with reduced physical, sensory or mental capabilities, or lack of experience and knowledge, unless they have been given supervision or instruction.
- The appliance is not to be used by children aged from 8 years and above and persons with reduced physical, sensory or mental capabilities, or lack of experience and knowledge, unless they have been given supervision or instruction.
- Do NOT allow anyone to conduct activities around grill during or following its use until it has cooled.
- DO NOT bump or impact the grill to prevent personal harm, damage to grill, or spillage/splashing of hot cooking liquid.
- Extreme caution must be used when moving an appliance containing hot oil or other hot liquids.
- Never move grill when in use. Allow grill to cool completely (below 115°F (45°C)) before moving or storing.
- The grill is HOT while in use and will remain HOT for a period of time afterwards and during cooling process. Use CAUTION. Wear protective gloves/mitts.
- Do not touch HOT surfaces. Use handles or knobs.
- Never use glass, plastic or ceramic cookware in smoker. Never place empty cookware in grill while in use.
- Accessory attachments not supplied by Masterbuilt® are NOT recommended and may cause injury.
- Do not store grill with hot ashes or charcoal inside grill/hopper (~~could be item specific~~). Store only when fire is completely out and all surfaces are cold.
- The grill and hopper heat shields are HOT while in use and will remain HOT for a period of time afterwards and during cooling process. Use CAUTION. Wear protective gloves/mitts.
- Be careful when removing food from grill. All surfaces are HOT and may cause burns. Use protective gloves/mitts or long, sturdy, cooking tools for protection from hot surfaces or splatter from cooking liquids.
- Grill is hot during use. To avoid burns, keep face and body away from door(s) and vents. Steam and hot air are expelled during use.
- Hopper heat shield, hopper lid and latch, hopper ash door and latch are HOT while the grill is in use and during cooling. Wear protective gloves when working with and around these components.
- Grill has an open flame. Keep hands, hair, and face away from flame. Do NOT lean over grill when lighting. Loose hair and clothing may catch fire.
- DO NOT obstruct flow of combustion and ventilation.
- Do not cover cooking grates with metal foil. This will trap heat and may cause damage to the grill.
- Never leave HOT coals or ashes unattended.
- Do not remove ashes while ashes and charcoal are HOT.
- Keep hands, hair, and face away from the burning charcoal. Be careful of loose hair and clothing during operation as they could catch fire.
- Use protective gloves when handling this grill or working with fire. Use protective gloves or long, sturdy fireplace tools when adding wood or charcoal.
- Never use charcoal lighting fluid, gasoline, alcohol or other highly volatile fluids to ignite charcoal. These fluids can explode causing injury or death. Always follow specific lighting instructions for this grill.
- Never overfill charcoal hopper. This can cause serious injury as well as damage to the grill.
- Dispose of cold ashes by placing them in aluminum foil, soaking with water, and discarding in a non-combustible container.
- CAUTION - To reduce the risk of electric shock, keep extension cord connection dry and off the ground.
- CAUTION - To reduce the risk of electric shock, do not immerse cord, plug or control panel in water or other liquid.
- WARNING: Risk of Electric Shock. Install only to a covered Class A GFCI receptacle that has an enclosure that is weatherproof with the attachment plug cap inserted or removed.
- Grill must only be used with an outdoor rated, weatherproof, covered socket.
- WARNING: Not for use with receptacles that are weatherproof only when the receptacle is covered (attachment plug cap not inserted and receptacle cover closed).
- When using electrical appliances, basic safety precautions should always be followed including the following:
    1. Do not plug in the appliance until fully assembled and ready for use.
    2. Use only approved grounded electrical outlet.
    3. Do not use during an electrical storm.
    4. Do not expose appliance to rain or water at any time.
- Outdoor extension cords must be used that are marked with suffix "W" and with the statement "Suitable for Use with Outdoor Appliances."
- The extension cord must be a grounding-type 3-wire cord.

WARNINGS AND IMPORTANT SAFEGUARDS

- Do not operate any appliance with a damaged cord or plug, or after appliance malfunctions or has been damaged in any manner. If the supply cord is damaged, it must be replaced by the manufacturer, its service agent or similarly qualified persons in order to avoid hazard.
- Extension cords may be used if care is exercised in their use.
- If an extension cord is used, be sure that:
    1. The marked electrical rating of the extension cord should be at least as great as the electrical rating of the appliance; and
    2. The cord should be arranged so that it will not drape over the counter top or tabletop where it can be pulled by children or tripped over unintentionally.
- Do not let cord hang on or touch hot surfaces.
- Do not place cord on or near a gas or electric burner or in a heated oven.
- To disconnect, turn controller "OFF" then remove plug from outlet.
- Unplug from outlet when not in use and before cleaning. Allow appliance to cool completely before adding/removing internal components.
- Do not clean this product with a water sprayer or the like.
- Never open hopper after initial startup or during use. If it is necessary to refill charcoal during use follow the specific reload instructions for this grill and always wear protective gloves.
- Never operate the grill with the temperature probe removed. This can cause the grill to overheat and cause serious personal injury and/or damage to the grill.
- Close heat and air intake slides after every use
- Open heat and air intake slides before every use
- Never operate the grill with the heat and air intake slides in the closed position. This can damage the grill.
- WARNING! Do not use spirit or petrol for lighting or re-lighting! Use only firelighters complying to EN 1860-3!

ELECTRIC REQUIREMENTS

- Power Supply (EU/UK): 100-240VAC, 50/60HZ, 0.5A, 18W
- Power Supply (AUS/NZ): 100-240VAC, 50/60HZ, 0.6A, 24W
- Product: 12V, 1.5A

STRUCTURAL PROXIMITY REQUIREMENTS

Maintain a minimum distance of 10 ft (3 m) from rear, sides and top of grill to all overhead construction, walls, rails or other combustible construction materials.

Maintain a minimum distance of 10 ft (3 m) from all combustible and flammable materials such as, wood, plants, grass, brush, paper, gasoline, or canvas.

This clearance provides adequate space for proper combustion, air circulation and venting. Grill should not be used on combustible materials like wood decks or other combustible materials.

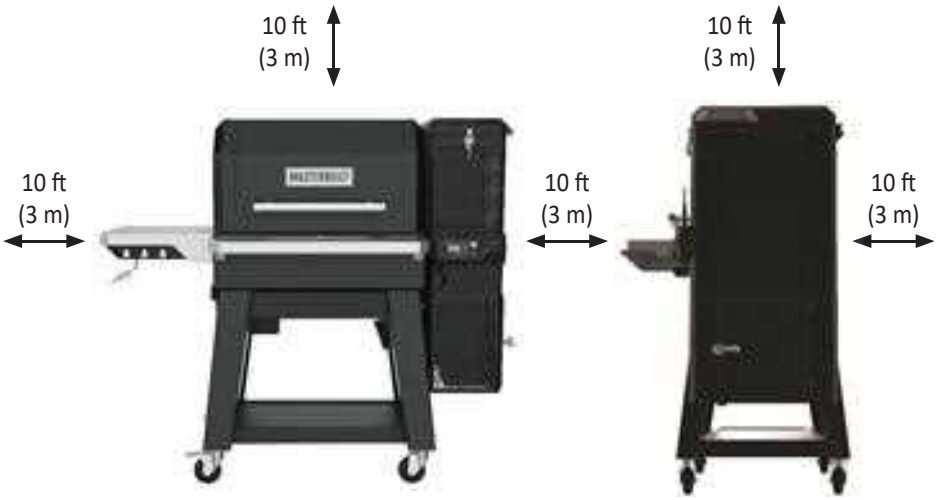

WARNING

Electric power cord is a trip hazard.

SAVE THESE INSTRUCTIONS

This product does not come with charcoal or wood chunks.

Operating Instructions

CONTROL PANEL

Power ON/Off/Pause Controller:

1. Press button to power controller ON.
2. Single press while on = PAUSE FUNCTION
3. Long press while on = Power OFF

Pause Function:

The grill is equipped with a PAUSE function to better help maintain set temperatures when the lid is opened.

- When cooking at temperatures over 500°F (260°C) ensure the PAUSE function is enabled BEFORE opening your grill lid.
- The pause function will stop the fan to ensure there is not a spike in temperature when opening the lid.
- To engage the PAUSE function, press the power button (the controller will display HOLD).
- To resume to normal temperature maintenance and to reactivate the fan, press the power button again.

Screen Cycle:

Press button to view graph or cycle through different controller views.

Screen Saver Mode:

Press and hold the screen cycle button to activate screen saver mode. In screen saver mode all set temperatures and timers remain active. To exit screen saver mode, press any button. Screen saver mode will also be deactivated if: a meat probe has reached the set temperature, a previously set timer has been reached, or an error message is triggered.

Set Temperature:

1. Press button.
2. Turn knob to desired temperature.
3. Press button again to set temperature
   (Temperature will automatically set after 3 seconds.)

Set Temperature From F° to C° :

1. With power off, hold set temp button
2. Press power button
3. Unit powers up with "F" or "C" flashing on display
4. Use knob to select temp unit
5. Press set temp to confirm

Set Time:

- **Countdown Timer**

1. Press button.
2. Turn knob to desired hours.
3. Press button to set hours.
4. Turn knob to desired minutes.
5. Press button to set minutes. The timer will start.
6. Press button to pause and resume timer.
7. Press and hold button to reset timer.

- **Count Up Timer**

1. Press and hold button.
2. Timer will begin counting up from 00:00. Timer will count by Minutes:Seconds and then Hours:Minutes.
3. Press button to pause and resume timer.
4. Press and hold button to reset timer.

Set Meat Probe Temperatures:

1. Plug in meat probe
2. Press screen cycle button until meat probe is displayed on screen
3. While meat probe is displayed on screen, press set temp button to set meat probe target
4. Scroll knob until desired temperature is displayed
5. Press set temp button to confirm temperature
   (If meat probe reaches 300F (149C), an alarm will sound. Remove the meat probe from the heat and allow it to cool.)

Operating Instructions

CONNECTIVITY

1. Download the Masterbuilt app from the Apple App Store or Google Play Store onto your smart device(s). For more information go to masterbuilt.com/pages/app-device-requirements.
2. Once the download is complete, open the Masterbuilt app and follow the instruction for pairing your grill and smart device(s).

This device complies with Part 15 of the FCC Rules. Operation is subject to the following two conditions:
1. This device may not cause harmful interference, and
2. This device must accept any interference received, including interference that may cause undesired operation.

FCC Warning:
Warning: Changes or modifications to this smoker not expressly approved by the party responsible for compliance could void the user's authority to operate the equipment.

FCC Statement:

This equipment has been tested and found to comply with the limits for a Class B digital device, pursuant to Part 15 of the FCC Rules. These limits are designed to provide reasonable protection against harmful interference in a residential installation. This equipment generates, uses and can radiate radio frequency energy and if not installed and used in accordance with the instructions, may cause harmful interference to radio communications.

However, there is no guarantee that interference will not occur in a particular installation. If this equipment does cause harmful interference to radio or television reception, which can be determined by turning the equipment off and on, the user is encouraged to try to correct the interference by one or more of the following measures:

1. Reorient or relocate the receiving antenna.
2. Increase the separation between the equipment and receiver.
3. Connect the equipment into an outlet on a circuit different from that to which the receiver is connected.
4. Consult the dealer or an experienced radio/TV technician for help.

Note: If you lose connection, smoker will continue as programmed. Smoker can be operated from the control panel if pairing or connection fails.

This device contains license-exempt transmitter(s)/receiver(s) that comply with Innovation, Science, and Economic Development Canada's license-exempt RSS(s). Operation is subject to the following two conditions:
1) This device may not cause interference.
2) This device must accept any interference, including interference that may cause undesired operation of the device.

This equipment must be installed and operated in accordance with provided instructions and the antenna(s) used for this transmitter must be installed to provide a separation distance of at least 20 cm from all persons and must not be co-located or operating in conjunction with any other antenna or transmitter. End-users and installers must be provided with antenna installation instructions and transmitter operating conditions for satisfying RF exposure compliance.

IC Warning:
This transmitter must not be co-located or operating in conjunction with any other antenna or transmitter. This equipment should be installed and operated with a minimum distance of 20 centimeters between the radiator and your body.

Wireless Transmi er:

Transmitter and WiFi Characteristics = RF 0dBM / 2412-2462 MHz

Operating Instructions

PRE-SEASONING

Pre-seasoning will rid your grill of chemicals and oils left over by the manufacturing process, allowing them to burn off. PRE-SEASON GRILL PRIOR TO FIRST USE.

1. Fill the hopper with charcoal approximately 1/4–1/2 full.
2. Start grill following the START-UP instructions and set the temperature to 250°F (121°C) for 60 minutes.
3. Set the temperature to 400°F (204°C) for 30 minutes.
4. Shut down the grill following the SHUTDOWN instructions.
5. Allow grill to cool COMPLETELY.
6. Repeat steps 3–6 at 350°F (177°C)

Frequent seasoning prevents rusting. If rusting occurs, clean with a steel brush, apply vegetable shortening and heat as indicated above.

START-UP

1. OPEN heat and air intake slides.

2. Open hopper lid and hopper ash door.
   - There is a safety switch at each of these doors that will prevent the fan from running when these doors are opened.
   - If charcoal remains from a previous cook, shake the charcoal grate to ensure all ash falls through to the ash tray.
   - Discard any ash from the ash tray.

3. Fill hopper with charcoal.
   - Approximately 18 lbs. (8 kgs.) of charcoal briquettes.
   - Approximately 12 lbs. (5.5 kgs.) of lump charcoal.
   - **Never use fast light charcoal or lighting fluid.**
   - If charcoal slips through charcoal grate into ash can, remove before starting.

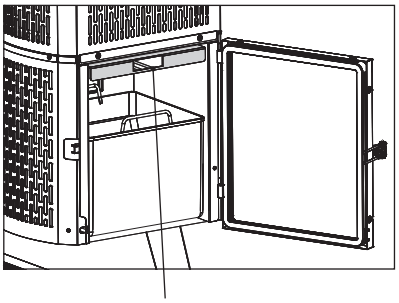

Note: Fire starter will be placed here.

4. Place fire starter in charcoal grate, light fire starter, and wait 1-2minutes to ensure fire starter catches fire.
   - Use a food safe fire starter block or twisted paper towel/paper.
   - Place in charcoal grate on the fire starter support bars.
   - Use caution and wear protective gloves.
   - Light with match stick or lighter.

5. Turn on controller and set to desired temperature.
   - Light the fire starter before setting temperature.
   - Wait 1–2 minutes after lighting fire starter to ensure fire starter is fully lit.

6. Wait for grill to reach desired set temperature.
   - Grill should preheat in approximately 15 minutes.

HEAT AND AIR INTAKE SLIDES

TO START :
Slide the intake slides into the “open” position

TO SHUTDOWN:
Slide the intake slides into the “closed” position

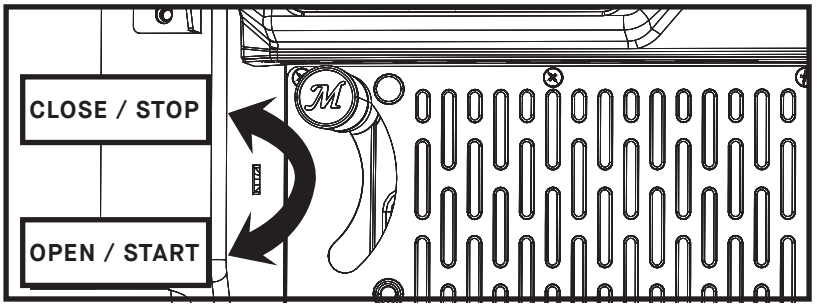

Operating Instructions

RELOAD

If it is necessary to refill the hopper while cooking, follow the safe reloading instructions below.

1. DO NOT refill charcoal when the grill is above 250°F (121°C)
2. The fan will turn off when you open the hopper lid or ash door. This is a safety feature of the grill.
3. USE EXTREME CAUTION: When the hopper lid is opened the flame will rise from the top of the hopper like a torch. Closing the hopper lid and ash door will return the flame to the normal operating level.
4. Open hopper lid, use and wear protective gloves. Hopper lid will be hot.
5. Quickly add more charcoal into hopper. A flame will rise from hopper after a short time, we recommend you refill as quickly as possible.
6. Close hopper lid.

ADDING SMOKE/FLAVOR

Mix wood chunks in the hopper with charcoal. NOTE: Never use more than 1.5 lbs (0.68 kg)of wood chunks throughout the hopper.

SHUTDOWN

1. Turn controller off and unplug grill.
2. Close grill lid, hopper lid and ash door.
3. Close heat and air intake slides.
   - The grill is designed to starve the charcoal of oxygen when shut down. This allows a percentage of unused charcoal to be saved for the next cook.
4. Failure to close slides when shutting down may cause damage to grill.
5. Always make sure grill is cool to the touch before cleaning, covering, and storing.

CLEANING AND STORAGE

ALWAYS MAKE SURE GRILL IS COOL TO THE TOUCH BEFORE CLEANING AND STORING.

- Inspect hardware and assembled parts on a regular basis to ensure grill is in safe working condition.
- Clean grill and cooking/smoking grates with mild dish detergent. Wipe outside of grill with a damp rag. DO NOT use oven cleaner or other cleaning agents. Make sure to dry thoroughly.
- Clean the temperature probe (pictured) periodically with mild dish detergent to ensure accurate grill temperature readings. Makesure to dry thoroughly.
- After ashes are cold, clean ash tray and inside of bottom hopper after every use to remove ash buildup, residue and dust.
- Always empty the ash tray after each use once ashes have completely cooled. This will help prolong the life of the ash tray.
- Dispose of cold ashes by placing them in aluminum foil, soaking with water and discarding in a non-combustible container.
- Always cover and store grill in a protected DRY AREA. Store only when fire is out and all surfaces are cold. Store meat probes inside the home.
- When grill is not in frequent use, even when using a grill cover, remember to check your grill periodically to avoid possible rust and corrosion due to moisture buildup.

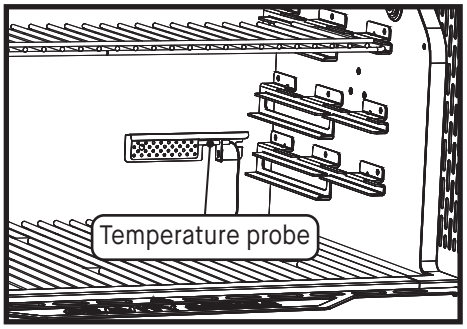

Operating Instructions

POWER CORD

The power cord plugs into your grill inside the front left leg.

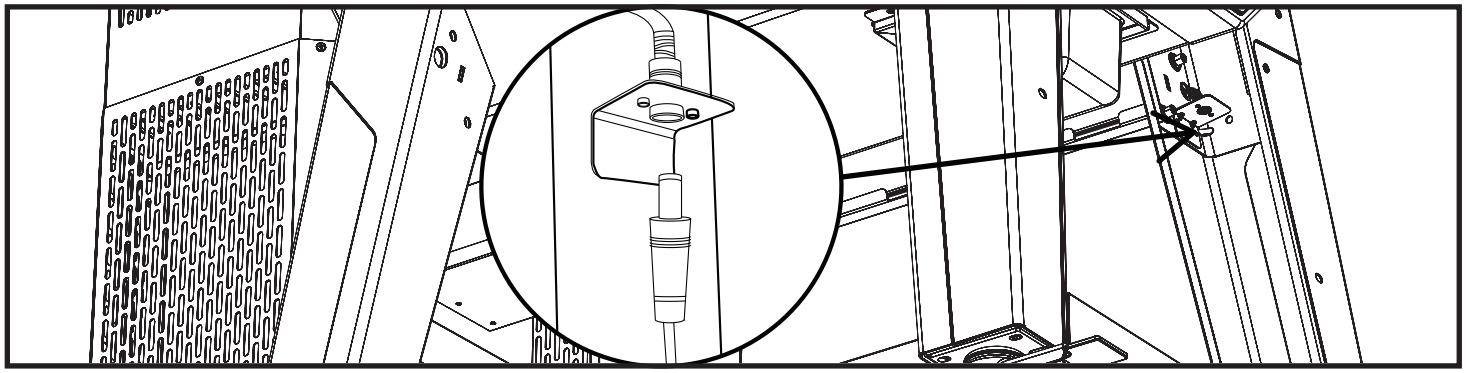

GRATE LIFTER

Use your grate lifter to handle your cooking grates.
CAUTION! Cooking grates can be HOT! Use the grill gripper to re-position the cooking grates throughout your cook. * NOTE: The grates should be as close together as possible.

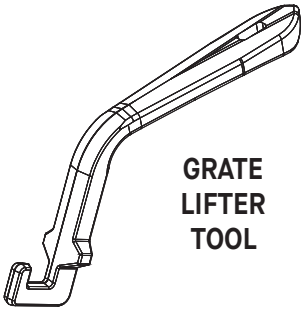

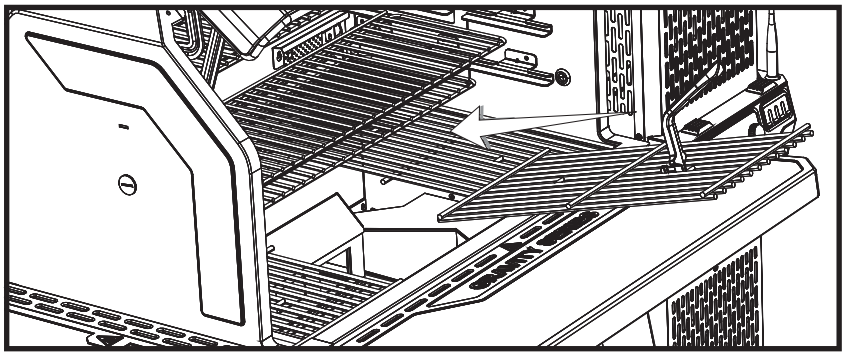

WARMING RACK STORAGE

The warming racks are designed to store inside of your grill. When you are not using a rack, it can nest underneath the back warming rack.

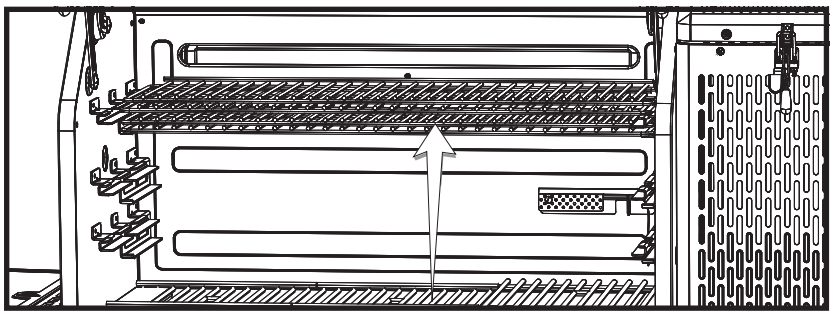

LATCH ADJUSTMENT

The hopper lid and door latches may require adjustment to ensure a proper seal and to prevent excessive smoke leakage. Loosen the latches slightly if they require excessive pressure to close. Tighten the latches slightly if there is excessive smoke leakage.

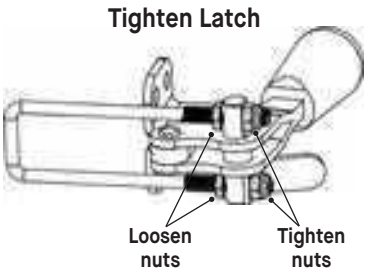

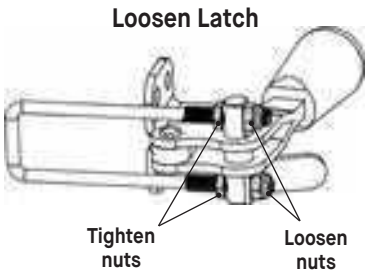

Troubleshooting

SYMPTOM	CAUSE	POSSIBLE SOLUTION
Controller not ON.	Power not ON.	Press the power button on the controller.
	Not plugged in.	Plug controller into power supply and power supply into wall outlet.
	Circuit breaker tripped.	Check wall outlet circuit breaker and reset if tripped.
	Controller malfunction.	Contact customer service
Fan not ON.	Temperature in cabinet has reached the set temperature.	Once the set temperature is reached the fan will turn off. Once the temperature falls below the set temperature the fan will restart. The fan will continue adjusting itself automatically to maintain the set temperature.
	Hopper lid open.	For safety, the hopper is equipped with shut-off switches to prevent the fan from stoking the fire when these doors are open. Closing the doors will engage the switches, allowing the fan to continue normal operation.
	Ash door open.	
	Fan disconnected from controller.	Check that connection is fully seated.
	Fan disconnected from wiring harness.	
	HOPR displayed on controller	There is a problem with your top or bottom switch, contact customer service and request a new switch kit
	Err 3	See below.
Controller temperature inaccurate.	Temperature probe not fully plugged in.	Check that connection is fully seated.
	Temperature probe is dirty.	Carefully clean temperature probe.
Slow heating.	Shutdown slides not opened.	Open shutdown slides.
	Low charcoal.	Refill hopper with charcoal.
	Grill lid open.	Close grill lid.
	Fan not on.	See “Fan not ON.”
Excessive smoke leaking from hopper.	Loose seal at hopper lid.	Tighten hopper lid latch.
	Loose seal at ash door.	Tighten ash door latch.
Controller restarts, enters standby mode.	Electrostatic charge. When the product is disturbed by electrostatic discharge, the controller may restart, then enter standby mode.	Controller needs to be restarted by the user to restore normal operation, this phenomenon is normal.
Err 1	Temperature probe not fully plugged in.	1. Check that connection is fully seated. 2. Unplug controller from power supply, wait 10 seconds and reconnect.
Err 2	Meat probe malfunction.	Contact customer service
Err 3	Grill overheated.	1. Turn off grill. 2. Check for cause of overheat. • Grease fire. • Fan malfunction. 3. Restart grill.
Err 4	Charcoal failed to ignite.	1. Ensure shutdown slides are open. 2. Ensure hopper lid and ash door are fully closed. 3. Ensure charcoal is not empty. 4. Ensure old ash from previous use has not blocked up the ash grate. Shake grate to allow all the old charcoal to fall thru it. 5. Restart grill.
Err 5	Meat Probe Temp above 300°F.	1. Using protective gloves, remove meat probe from grill. 2. Unplug from controller. 3. Allow meat probe to cool.
Poor Wifi connection	Weak signal.	1. Angle the antenna on back of controller to point at the ground

LIMITED WARRANTY

Masterbuilt® warrants the Gravity Series XT Digital Charcoal Grill and Smoker to be free from defects in material and workmanship under proper assembly, normal use and recommended care for 3 year from the date of original retail purchase. The Masterbuilt® warranty does not cover paint finish as it may burn off during normal use. The Masterbuilt® warranty does not cover rust. Masterbuilt® requires proof of purchase for warranty claim, such as a receipt.

WHEN DOES THE WARRANTY COVERAGE BEGIN?

Warranty coverage commences on the original date of purchase and covers only the original purchaser. For the warranty to apply, you must register your grill. If a defect in material or workmanship is discovered during the applicable warranty period under normal use and maintenance, Masterbuilt® will, at our sole option, replace or repair the defective component at no cost to you for the component itself. This warranty does not apply to labor, or any other cost associated with the service, repair or operation of the grill. Masterbuilt® will pay all shipping charges on warranty parts.

AUSTRALIA AND NEW ZEALAND RESIDENTS ONLY:

Our goods come with guarantees that cannot be excluded under the Australian or New Zealand Consumer Law. You are entitled to a replacement or refund for a major failure and compensation for any other reasonably foreseeable loss or damage. You are also entitled to have the goods repaired or replaced if the goods fail to be of acceptable quality and the failure does not amount to a major failure.

WHAT IS NOT COVERED?

This warranty does not apply to damage caused by abuse or use of the product for purposes other than that for which it is designed, damage caused by lack of proper use, assembly, maintenance or installation, damages caused by accidents or natural disasters, damage caused by unauthorized attachments or modifications, or damage during transport. This warranty does not cover damage from normal wear and tear from use of the product (for example, scratches, dents, dings and chipping) or changes in the appearance of the grill that do not affect its performance. Commercial use is not recommended with the use of Masterbuilt products, and this warranty does not apply to commercial use of any kind. This usage for example is for restaurateurs, caterers, butchers, rental companies, food trucks and other such commercial entities.
This limited warranty is exclusive and in lieu of any other warranty, written or oral, express or implied, including but not limited to the warranty of merchantability or fitness for a particular purpose. The duration of any implied warranties, including any implied warranty of merchantability or fitness for a particular purpose is expressly limited to the duration of the warranty period for the applicable component.
The purchaser's exclusive remedy for breach of this limited warranty or any implied warranty shall be limited as specified herein to replacement. In no case shall Masterbuilt be liable for any special, incidental or consequential damages.

This warranty is provided to you in addition to all rights and remedies conveyed to you by consumer protection laws and regulations. This warranty in no way affects your legal rights under statutory warranty regulations in your state or country of residence, including the EU. Depending on your state or country of residence limitations on the length of an implied warranty or the damages available to you may not be limited by this warranty.

WHAT WILL VOID THE WARRANTY?

Purchasing any Masterbuilt® product through an unauthorized dealer voids the warranty. An unauthorized dealer is defined as any retailer who has not been expressly granted permission by Masterbuilt® to sell Masterbuilt® products.

NEED ASSISTANCE? CONTACT US

Our warranty terms may change from time to time. For an updated version of our warranty, visit www.masterbuilt.com/pages/warranty. For assistance or to request an updated copy of our warranty, contact us at the below.

Masterbuilt ®
Premier Specialty Brands, LLC
5367 New Peachtree Road
Suite 150
Chamblee, GA 30341
https://www.masterbuilt.com/pages/customer-support

Masterbuilt®
Kamado Joe Europe
Lange Voorhout 86,2514 EJ
Den Haag, Netherlands
Chamblee, GA 30341
https://international.masterbuilt.com/pages/customer-support

Australia & New Zealand
Please contact your retailer.

Masterbuilt ®
Kamado Joe UK Limited
Cheyenne House
West Street, Farnham
GU9 7EQ
https://international.masterbuilt.com/pages/customer-support

IC Warning

This device complies with Industry Canada licence-exempt RSS standard(s).
Operation is subject to the following two conditions:
(1) This device may not cause interference, and
(2) This device must accept any interference, including interference
that may cause undesired operation of the device.

Le présent appareil est conforme aux CNR d'Industrie Canada applicables
aux appareils radio exempts de licence. L'exploitation est autorisée aux
deux conditions suivantes: (1) l'appareil ne doit pas produire de brouillage,
et (2) l'utilisateur de l'appareil doit accepter tout brouillage radioélectrique
subi, même si le brouillage est susceptible d'en compromettre le fonctionnement

RF Exposure Statement

The device has been evaluated to meet general RF exposure requirement. This equipment should be installed and operated with minimum distance 20cm between the radiator & your body.
L'appareil a été évalué pour répondre aux exigences générales d'exposition aux RF. Cet équipement doit être installé et utilisé avec une distance minimale de 20 cm entre le radiateur et votre corps.

FCC Radiation Exposure Statement:

This equipment complies with FCC radiation exposure limits set forth for an uncontrolled environment. This equipment should be installed and operated with minimum distance 20 cm between the radiator & your body.

MASTERBUILT®