11

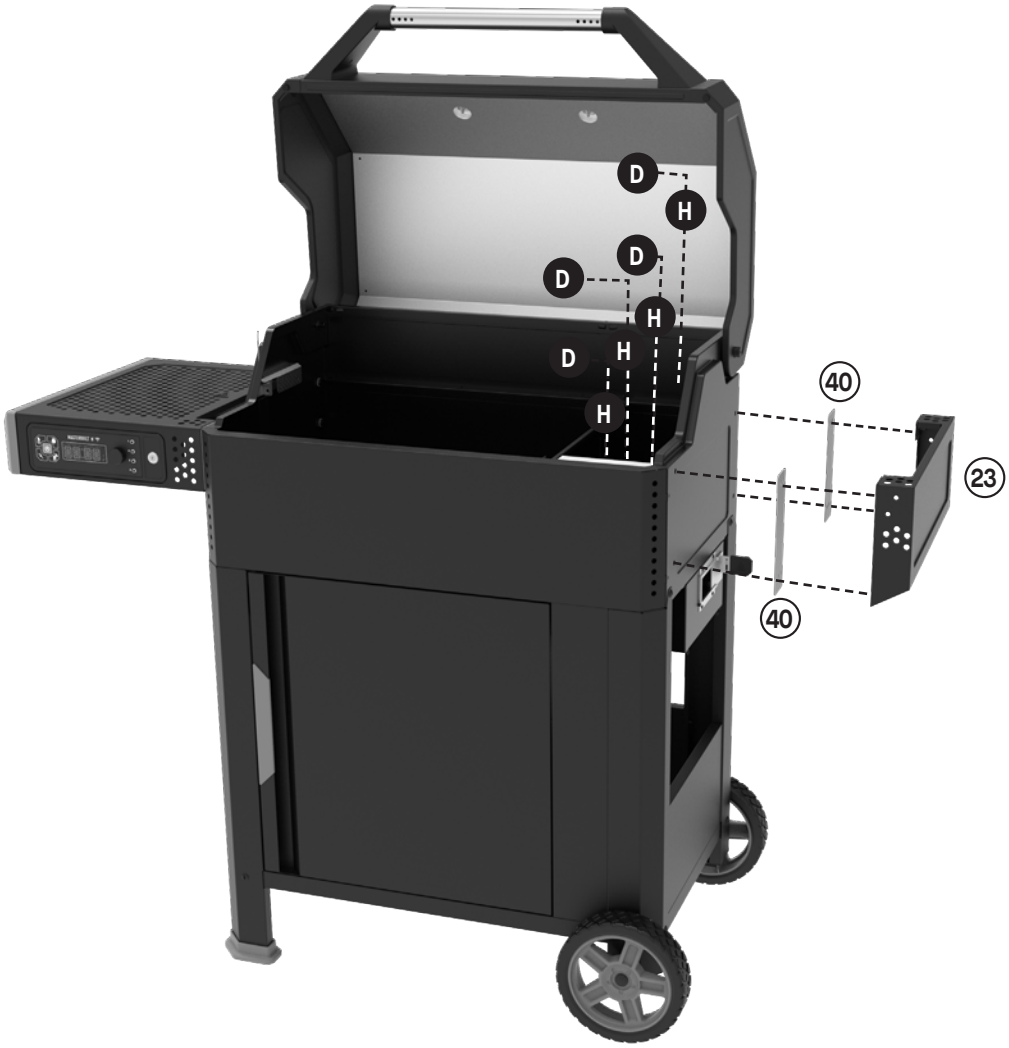

12

13

14

15

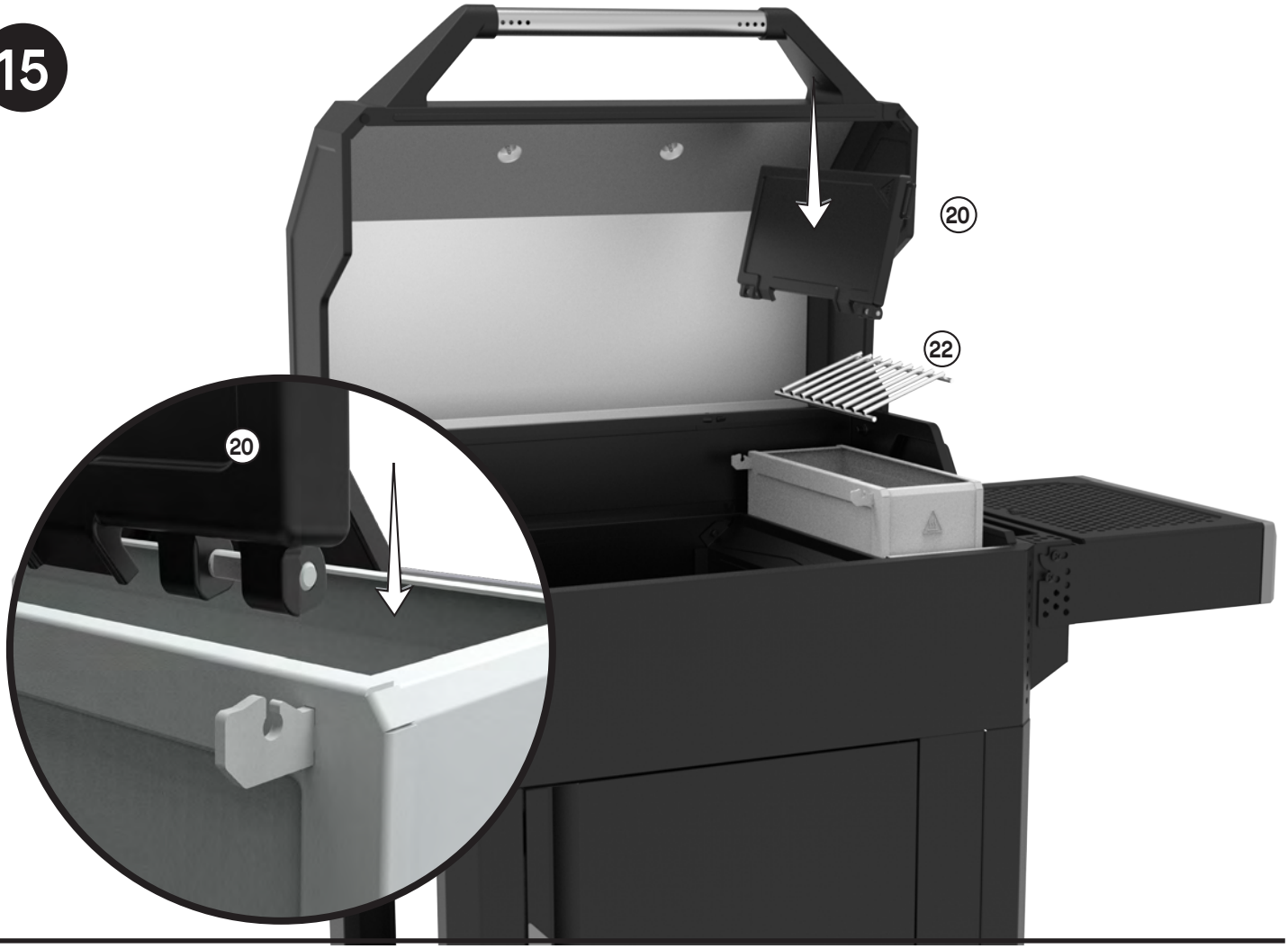

16

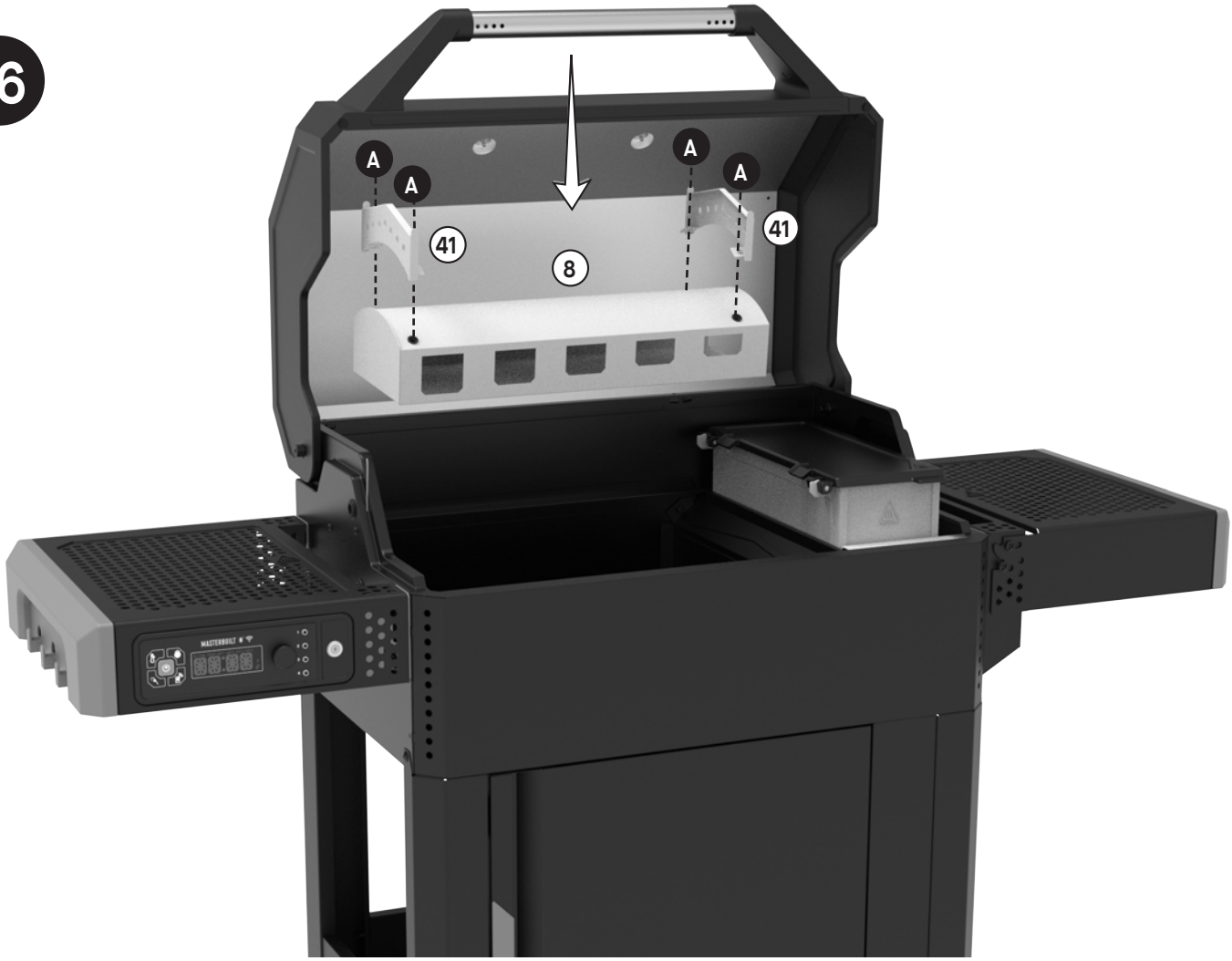

17

18

19

20

Wiring Diagram | Diagramme de câblage | Diagrama de cableado

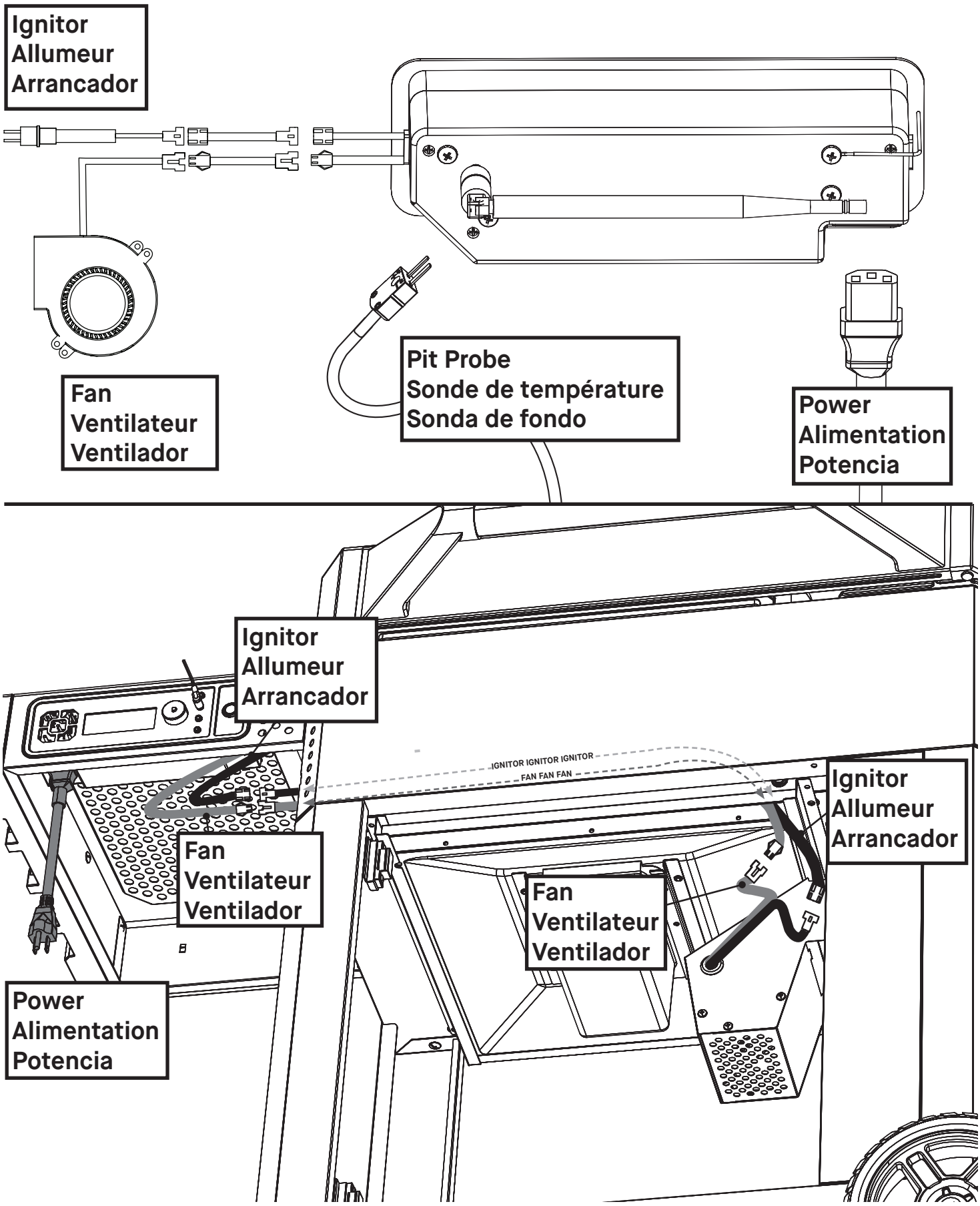

FOR OUTDOOR USE ONLY. NOT FOR COMMERCIAL USE.

WARNING

- This manual contains important information necessary for the proper assembly and safe use of the appliance.
- Read and follow all warnings and instructions before assembling and using the appliance.
- Keep this manual for future reference.

WARNING

WARNING: This product can expose you to chemicals including DINP, which is known to the State of California to cause cancer, and carbon monoxide, which is known to the State of California to cause birth defects and other reproductive harm. For more information go to www.P65Warnings.ca.gov

CARBON MONOXIDE HAZARD

Failure to follow these instructions could result in fire, explosion or burn hazard which could cause property damage, personal injury, or death.

- Burning wood chips, wood chunks, wood pellets, charcoal and propane gives off carbon monoxide, which has no odor and can cause death.
- DO NOT burn wood chips, wood chunks, wood pellets, charcoal or propane inside homes, vehicles, tents, garages or any enclosed areas.
- USE ONLY OUTDOORS where it is well ventilated.

WARNINGS AND IMPORTANT SAFEGUARDS

READ ALL INSTRUCTIONS

- Do not leave grill unattended.
- Grill is for OUTDOOR HOUSEHOLD USE ONLY.
- Do not use indoors!
- Always use grill in accordance with all applicable local, state, and federal fire codes.
- Potential damage to grill or harm to user may result from failure to follow warnings.
- Never use inside enclosed areas such as patios, garages, buildings or tents.
- Never use inside recreational vehicles or on boats.
- Never operate grill under overhead construction such as roof coverings, carports, awnings, or overhangs. (SEE STRUCTURAL PROXIMITY REQUIREMENTS)
- Keep appliance clear and free from combustible materials such as gasoline and other flammable vapors and liquids.
- Use grill on a level, non-combustible, stable surface such as dirt, concrete, brick or rock. An asphalt surface (blacktop) may not be acceptable for this purpose.
- Do not use grill on wooden or flammable surfaces.
- Grill MUST be on the ground. Do not place grill on tables or counters. DO NOT move grill across uneven surfaces.
- Grill should only be rolled on smooth surface.
- Grill should never be rolled up/down stairs or uneven surface.
- Never use grill as a heater (READ CARBON MONOXIDE HAZARD).
- Never use appliance for anything other than its intended use. This grill is NOT for commercial use.
- Keep a fire extinguisher accessible at all times while operating the grill.
- When cooking with oil or grease, have a type BC or ABC fire extinguisher readily available.
- In the event of an oil or grease fire do not attempt to extinguish with water. Immediately call the fire department. A type BC or ABC fire extinguisher may, in some circumstances, contain the fire.
- Before each use check all nuts, screws and bolts to make sure they are tight and secure.
- Use of alcohol, prescription, or non-prescription drugs may impair user's ability to properly assemble or safely operate grill.
- Keep children and pets away from grill at all times. Do NOT allow children to use grill. Close supervision is necessary when children or pets are in the area where grill is being used.

WARNINGS AND IMPORTANT SAFEGUARDS

- Do NOT allow anyone to conduct activities around grill during or following its use until it has cooled.
- DO NOT bump or impact the grill to prevent personal harm, damage to grill, or spillage/splashing of hot cooking liquid.
- Extreme caution must be used when moving an appliance containing hot oil or other hot liquids.
- Never move grill when in use. Allow grill to cool completely (below 115°F (45°C)) before moving or storing.
- The grill is HOT while in use and will remain HOT for a period of time afterwards and during cooling process. Use CAUTION. Wear protective gloves/mitts.
- Do not touch HOT surfaces. Use handles or knobs.
- Never use glass, plastic or ceramic cookware in smoker. Never place empty cookware in grill while in use.
- Accessory attachments not supplied by Masterbuilt® are NOT recommended and may cause injury.
- Do not store grill with hot ashes or charcoal inside grill/hopper. Store only when fire is completely out and all surfaces are cold.
- The grill and hopper are HOT while in use and will remain HOT for a period of time afterwards and during cooling process. Use CAUTION. Wear protective gloves/mitts.
- Be careful when removing food from grill. All surfaces are HOT and may cause burns. Use protective gloves/mitts or long, sturdy, cooking tools for protection from hot surfaces or splatter from cooking liquids.
- Grill is hot during use. To avoid burns, keep face and body away from door(s) and vents. Steam and hot air are expelled during use.
- Hopper and hopper lid are HOT while the grill is in use and during cooling. Wear protective gloves when working with and around these components.
- Grill has an open flame. Keep hands, hair, and face away from flame. Do NOT lean over grill when lighting. Loose hair and clothing may catch fire.
- DO NOT obstruct flow of combustion and ventilation.
- Do not cover cooking grates with metal foil. This will trap heat and may cause damage to the grill.
- Never leave HOT coals or ashes unattended.
- Do not remove ashes while ashes and charcoal are HOT.
- Keep hands, hair, and face away from the burning charcoal. Be careful of loose hair and clothing during operation as they could catch fire.
- Use protective gloves when handling this grill or working with fire. Use protective gloves or long, sturdy fireplace tools when adding wood or charcoal.
- Never use charcoal lighting fluid, gasoline, alcohol or other highly volatile fluids to ignite charcoal. These fluids can explode causing injury or death. Always follow specific lighting instructions for this grill.
- Never overfill charcoal hopper. This can cause serious injury as well as damage to the grill.
- Dispose of cold ashes by placing them in aluminum foil, soaking with water, and discarding in a non-combustible container.
- CAUTION - To reduce the risk of electric shock, keep extension cord connection dry and off the ground.
- CAUTION - To reduce the risk of electric shock, do not immerse cord, plug or control panel in water or other liquid.
- WARNING: Risk of Electric Shock. Install only to a covered Class A GFCI receptacle that has an enclosure that is weatherproof with the attachment plug cap inserted or removed.
- WARNING: Not for use with receptacles that are weatherproof only when the receptacle is covered (attachment plug cap not inserted and receptacle cover closed).
- When using electrical appliances, basic safety precautions should always be followed including the following:
    1. Do not plug in the appliance until fully assembled and ready for use.
    2. Use only approved grounded electrical outlet.
    3. Do not use during an electrical storm.
    4. Do not expose appliance to rain or water at any time.
- Do not operate any appliance with a damaged cord or plug, or after appliance malfunctions or has been damaged in any manner.
- Extension cords may be used if care is exercised in their use.
- If an extension cord is used, be sure that:
    1. The marked electrical rating of the extension cord should be at least as great as the electrical rating of the appliance; and
    2. The cord should be arranged so that it will not drape over the counter top or tabletop where it can be pulled by children or tripped over unintentionally.
- Outdoor extension cords must be used that are marked with suffix “W” and with the statement “Suitable for Use with Outdoor Appliances.”
- The extension cord must be a grounding-type 3-wire cord.
- Do not let cord hang on or touch hot surfaces.
- Do not place cord on or near a gas or electric burner or in a heated oven.
- To disconnect, turn controller “OFF” then remove plug from outlet.
- Unplug from outlet when not in use and before cleaning. Allow appliance to cool completely before adding/removing internal components.

WARNINGS AND IMPORTANT SAFEGUARDS

- Do not clean this product with a water sprayer or the like.
- Never open hopper after initial startup or during use. If it is necessary to refill charcoal during use follow the specific reload instructions for this grill and always wear protective gloves.
- Never operate the grill with the temperature probe removed. This can cause the grill to overheat and cause serious personal injury and/or damage to the grill.
- WARNING! Do not use spirit or petrol for lighting or re-lighting!

- This device complies with Industry Canada licence-exempt RSS standard(s). Operation is subject to the following two conditions:
  1. This device may not cause interference, and
  2. This device must accept any interference, including interference that may cause undesired operation of the device.
- This equipment complies with IC radiation exposure limits set forth for an uncontrolled environment. This equipment should be installed and operated with minimum distance 20cm between the radiator & your body.

ELECTRIC REQUIREMENTS

- 100-120VAC, 60HZ, 0.83A, 90W

STRUCTURAL PROXIMITY REQUIREMENTS

Maintain a minimum distance of 10ft(3m) from rear, sides and top of grill to all overhead construction, walls, rails or other combustible construction materials.

Maintain a minimum distance of 10ft(3m) from all combustible and flammable materials such as, wood, plants, grass, brush, paper, gasoline, or canvas.

This clearance provides adequate space for proper combustion, air circulation and venting. Grill should not be used on combustible materials like wood decks or other combustible materials.

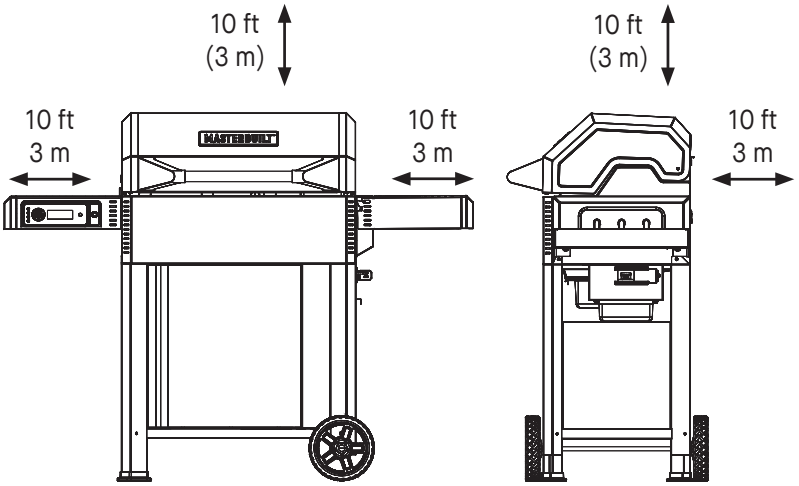

WARNING

Electric power cord is a trip hazard.

SAVE THESE INSTRUCTIONS

This product does not come with charcoal or wood chunks.

Operating Instructions

PRE-SEASONING

Pre-seasoning will rid your grill of chemicals and oils left over by the manufacturing process.
PRE-SEASON GRILL PRIOR TO FIRST USE.

1. Fill the hopper with charcoal approximately 1/4–1/2 full.
2. Start grill following the START-UP instructions and set the temperature to 250°F (121°C) for 60 minutes.
3. After 60 minutes set the temperature to 400°F (204°C) for 30 minutes.
4. Shut down the grill following the SHUTDOWN instructions.
5. Allow grill to cool COMPLETELY.
6. Using a napkin or cloth, rub a light coat of cooking oil on grates, sear plate, warming racks, and the inside of the grill lid and body. Use caution, the grill will be HOT to the touch.
7. Repeat steps 3–6 at 350°F (175°C).

Frequent seasoning prevents rusting. If rusting occurs, clean with a steel brush, apply vegetable shortening and heat as indicated above.

REGULAR START-UP

1. Plug the grill in and power ON the controller.
2. DO NOT LOAD CHARCOAL UNTIL STEP 5.
3. Press the auto ignite button to preheat the ignitor:
   a. Ignite button should now be flashing.
   b. Controller display should be flashing 450F (232C).
4. Scroll controller knob to change desired temperature.
   a. Temperature Selection Options:
   - Press the set temp button to select the temperature shown on the display.
   - If you do not scroll the knob, the controller will auto select the temp on display (default temp 450F / 232C).
5. Fill the MiniHopper with charcoal (no more than 7lbs/3kgs of briquette or 5lbs/2.25kgs of lump).
6. Close the hopper lid and grill lid.
7. Wait for the auto ignite button to stop flashing (this should take approximately 45 seconds).
8. Place 1 fire starter in the fire starter holder (see fig. 1)
9. Slide the fire starter tray into the lower hopper until it stops and close the door.
10. The grill will need to run a startup sequence; it may take a few moments for the fan to turn on.

Figure 1

IGNITOR TIPS:
a. Flashing ignitor button = ignitor preheating (DO NOT load fire starter while the ignitor is preheating).
b. Solid ignitor button = igniter is ON/hot.
c. Ignitor will not turn ON if grill is above 200F (93C).
d. IF temp is already set, ignitor will not prompt you to set temp.
e. Any time the ignitor is activated, the grill will run the startup sequence. During this sequence the fan will not run by PID. Fan will return to PID after the startup sequence completes. The startup sequence is approximately 8 minutes.

NOTE: For proper fire starter ignition, it is important to follow the steps listed above in the proper sequence. Failure to follow the steps may result in a failed startup procedure.