VT22M Datasheet

Version V1.0

Copyright ©2023

Copyright © 2023 Vaultek Safe Inc. All Rights Reserved

Disclaimer and copyright notice

The information in this article, including the URL address for reference, is subject to change without prior notice. The Documentation is provided "as is" without any warranty, including any warranties of merchantability, fitness for a particular purpose, or non-infringement, and any warranties mentioned in the proposal, specification or sample. This document is not responsible for any infringement of any patent rights arising out of the use of the information in this document. No license, express or implied, by estoppel or otherwise, is hereby granted.

The test data obtained in this paper are all obtained by Vaultek laboratory, and the actual results may be slightly different. The Wi-Fi alliance membership mark is owned by the Wi-Fi alliance.

All trade mark names, trademarks and registered trademarks mentioned herein are the property of their respective owners and are hereby declared.
The final interpretation right is owned by Vaultek Safe Inc.

NOTE:
The contents of this manual may be changed due to the version upgrade of the product or other reasons. Vaultek Safe Inc. reserves the right to modify the contents of this manual without any notice. This manual is only used as a guide, and Vaultek Safe Inc. makes every effort to provide accurate information in this manual, but Vaultek Safe Inc. does not ensure that the contents of the manual are completely true. All statements, information and the recommendations in this manual do not constitute for any warranty, express or implied.

Copyright © 2023 Vaultek Safe Inc. All Rights Reserved

Change History of Revision

Revision	Date	Contents	Prepared	Approval
V1.0	2023/9/25	Initial Release	Sophia Wen	Jervis Zhan

Copyright © 2023 Vaultek Safe Inc. All Rights Reserved

Product overview

VT22M is a dual-frequency Wi- Fi Bluetooth SoC module based on RTL8720 DN. VT22M supports dual-frequency (2.4Ghz or 5Ghz) WLAN and low-power Bluetooth 5.0; it integrates ARM V8 (compatible with Cortex- M4F) high- performance MCU, ARM V8M (compatible with Cortex- M0) low-power MCU, WLAN(802 .11a/b/g/n), MAC, Bluetooth baseband and RF baseband) and provides a set of configurable GPIO ports for the control of different peripherals.

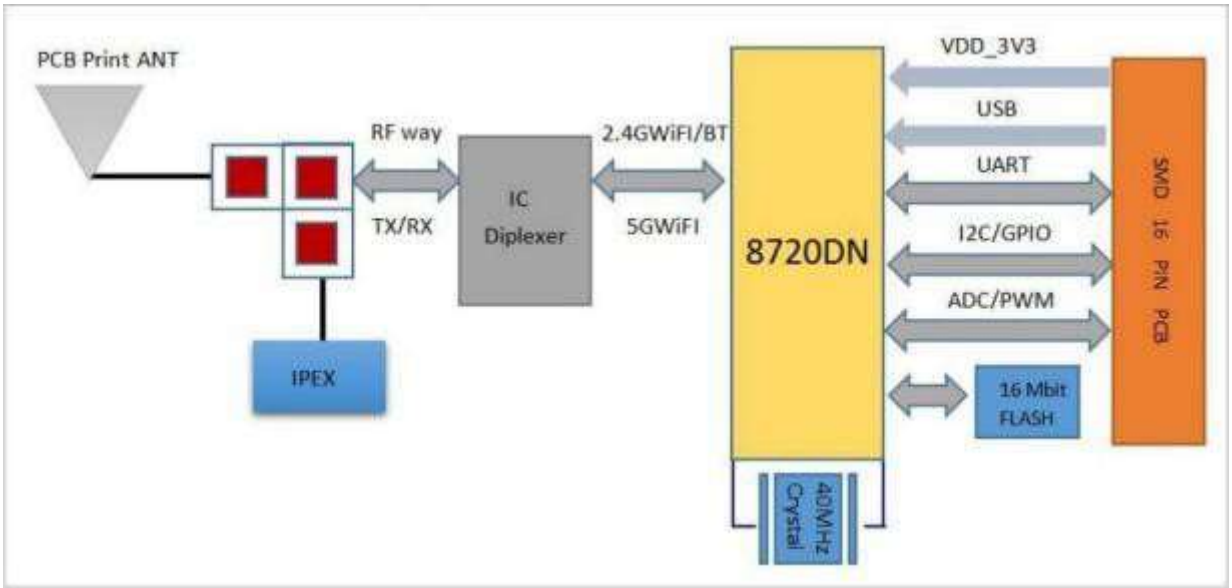

Features

- Support 802.11a/b/g/n 1x1，2.4GHz or 5GHz.
- Support HT20 / HT40 mode.
- Support low power beacon listening mode, low power reception mode and low power pending mode.
- Embedded AES/DES /SHA hardware engine.
- Support TrustZone-M and safe start up.
- Support SWD debug port access protection and prohibition mode.
- Support BLE5.0
- Bluetooth supports high power mode (7dBm, share the same PA with Wi-Fi).
- Wi-Fi and BT share the same antenna.
- Support STA/ AP/ STA+AP operating mode.
- Support the Smart Config (APP) /AirKiss(wechat) of Android, IOS (One-click distribution network).
- Support serial port local upgrade and remote firmware upgrade (FOTA).

Copyright © 2023 Vaultek Safe Inc. All Rights Reserved

Parameters

Figure 1 Main Parameter

Model Number	VT22M
Package	SMD-16
Size	24mm*16mm*3(±0.2)mm
Antenna Type	Printed on board, 14mm*3.5mm
Antenna Gain	2.4GHz: 0.43dBi 5.0GHz: 2.94dBi
Frequency Range	Wi-Fi: 2400-2483.5MHz or 5180-5825MHz Bluetooth: 2402MHz – 2480MHz
Bluetooth	BLE 5.0
Operating Temperature.	-40 ℃ ~ 85 ℃
Storage Environment	-40 ℃ ~ 125 ℃ , < 90%RH
Power Supply	3.0V ~ 3.6V(TYP: 3.3V)/500mA
Interfaces	UART/GPIO/ADC/PWM/IIC/SPI/SWD
Flash Size	16Mbit
Certification	FCC, BQB, Wi-Fi

Electrical parameters

VT22M module is an electrostatic sensitive device, which needs special ESD precautions. When used, ESD protective devices should be added. The correct ESD processing and packaging must be adopted in the transportation, operation and use of VT22M modules. Do not touch the module by hand or weld with a non- antistatic soldering iron to avoid damage to the module.

Power Requirements

Parameter	Min	Typ	Max	Unit
VDD	3.0	3.3	3.6	V
VIO	1.76	3.3 or 1.8	3.3	V
IIO			50	mA
ESD			2000	V

Radio Performance

Items	Typical Value	Unit
Radio Frequency	2400-2483.5 or 5180-5825	MHz
11a mode，PA output power	14±2	dBm
11n mode，PA output power	14±2	dBm

Copyright © 2023 Vaultek Safe Inc. All Rights Reserved

119 mode，PA output power	15±2	dBm
11b mode，PA output power	16±2	dBm
Bluetooth output power	7±2	dBm
CCK with 1 Mbps Sensitivity	＜＝-90	dBm
CCK with 11 Mbps Sensitivity	＜＝-85	dBm
6 Mbps (1/2 BPSK)	＜＝-88	dBm
54 Mbps (3/4 64-QAM)	＜＝-70	dBm
HT20 (MCS7)	＜＝-67	dBm
Bluetooth Sensitivity	＜＝-92	dBm

Appearance size

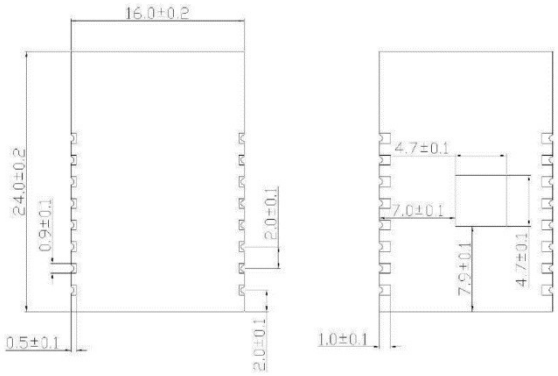

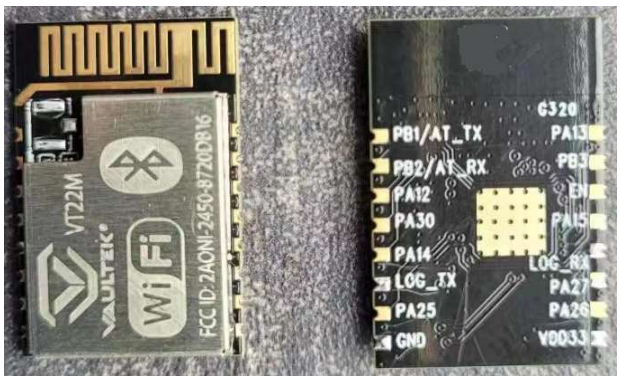

Pin definition

VT22M provides application with 16 PINs. The following table describes the definition of PINs.

PIN Description

PIN Number	PIN Number	PIN Function
1	PA13	LP_PWM1/SPI1_MISO
2	PB3	ADC/ SWD_ CLK
3	CHIP_EN	Chip enable port
4	PA15	SPI1_CS
5	PA8	UART_LOG_RXD
6	PA27	SWD_ DATA
7	PA26	LP_I2C_SDA/LP_PWM5

Copyright © 2023 Vaultek Safe Inc. All Rights Reserved

8	VDD_3V3	VDD
9	Ground	GND
10	PA25	LP_I2C_SCL/LP_PWM4
11	PA7	UART_LOG_TXD
12	PA14	SPI1_ CLK
13	PA30	LP_PWM1
14	PA12	SPI1_MOSI/LP_PWM0
15	PB2	LP_ UART_RXD
16	PB1	LP_ UART_TXD

Copyright © 2023 Vaultek Safe Inc. All Rights Reserved

Design Guidance

Application Circuit

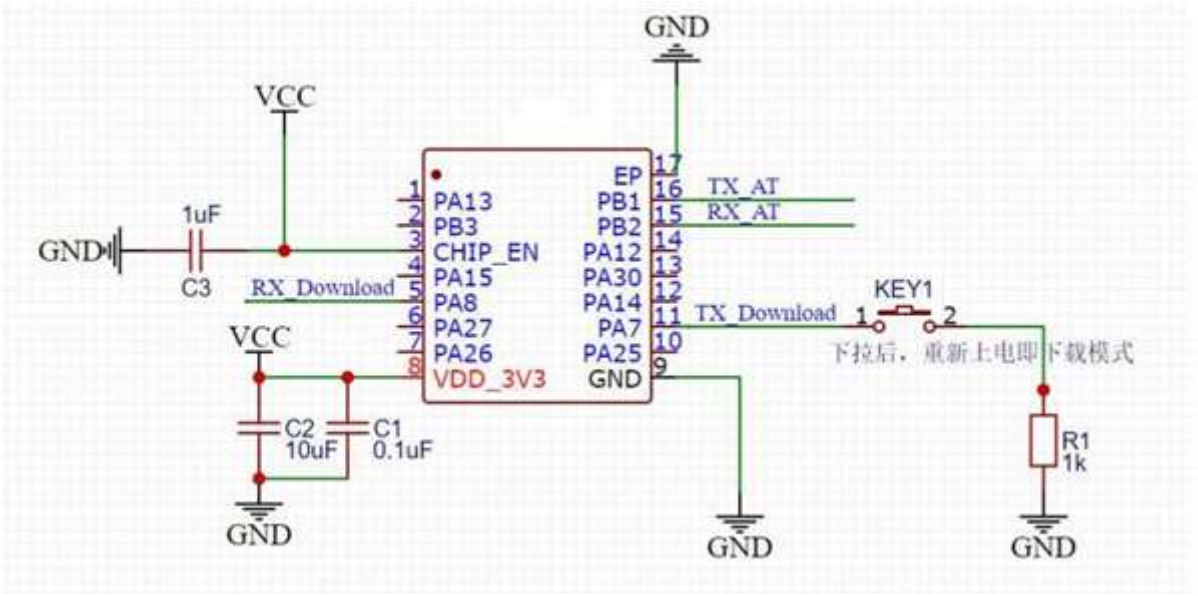

PCB Footprint Dimension

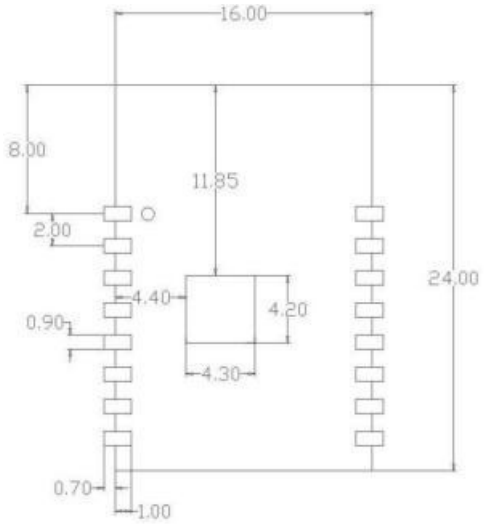

Antenna Layout Requirements

(1) Installation position on the main board，advise for following two ways:

Option 1 ： The module is placed on the edge of the main board, and the antenna area is extended out of the edge of the main board.

Option 2 ： Put the module on the edge of the motherboard, and the edge of the motherboard is hollowed out in the antenna position.

Copyright © 2023 Vaultek Safe Inc. All Rights Reserved

(2) In order to meet the performance of the on-board antenna, metal parts are prohibited from being placed around the antenna.

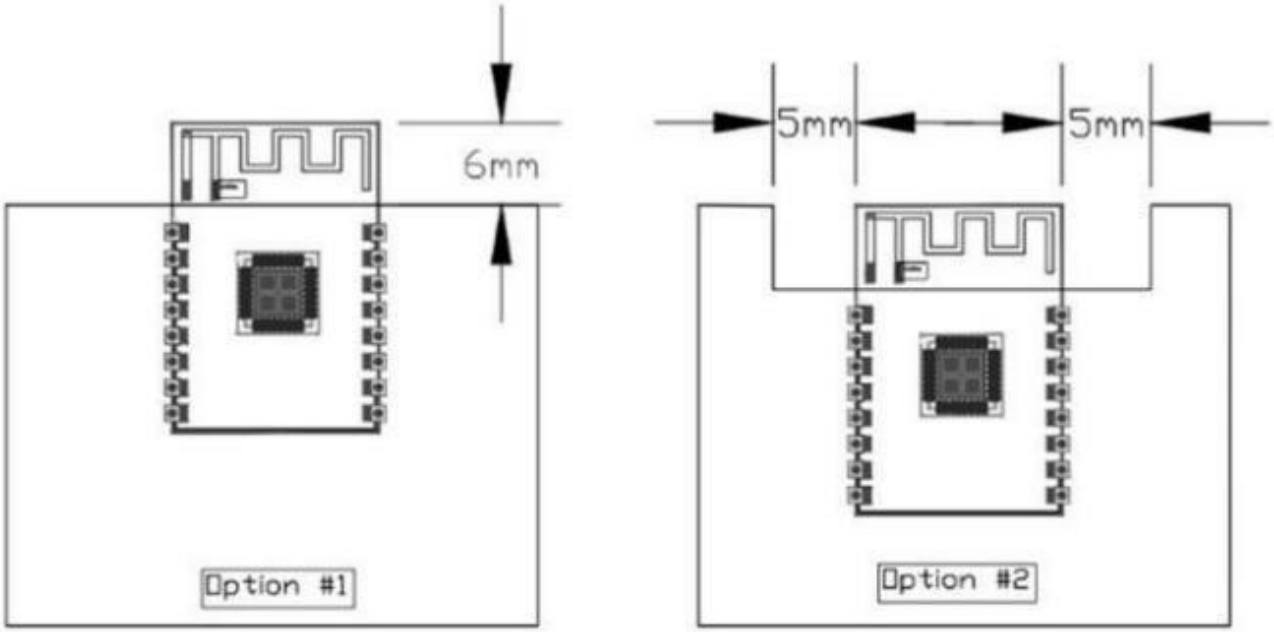

Power Supply

(1) Recommended voltage is 3.3V and peak Current is over 500mA .
(2) It is recommended to use the LDO power supply；If DC-DC is used, the ripple is controlled within 30 mV.
(3) DC-DC power supply circuit is recommended to reserve the position of the dynamic response capacitor, and the output ripple can be optimized when the load change is large.

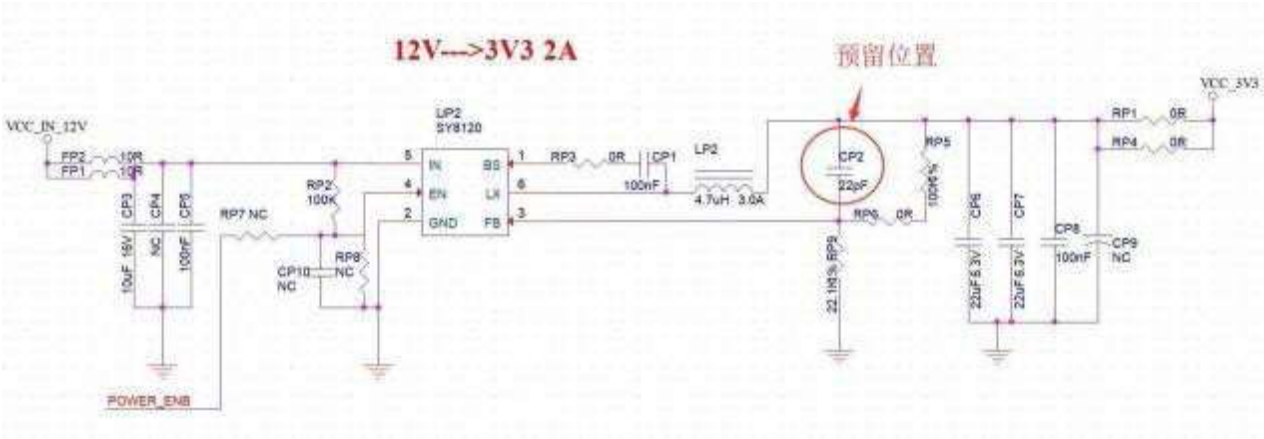

(4) Proposed addition of ESD Devices to Power supply Interface.

GPIO

(1) At the periphery of the module, some GPIO ports are led out, and a resistance of 10-100 ohms can be connected in series on the IO port for use. This suppresses overshoot and is more stable on both sides. Help for both EMI and ESD.
(2) For the up-and-down drawing of the special IO-port, reference will be made to the use

Copyright © 2023 Vaultek Safe Inc. All Rights Reserved

description of the specification, which will affect the start- up configuration of the module.
(3) The IO port of the module is 3.3 V. If the main control does not match the IO-level of the module, it is necessary to increase the level conversion circuit.
(4) If the IO interface is directly connected to the peripheral interface, or the pins and other terminals, it is recommended to reserve the ESD device near the terminal at the IO trace.

Level switching circuit

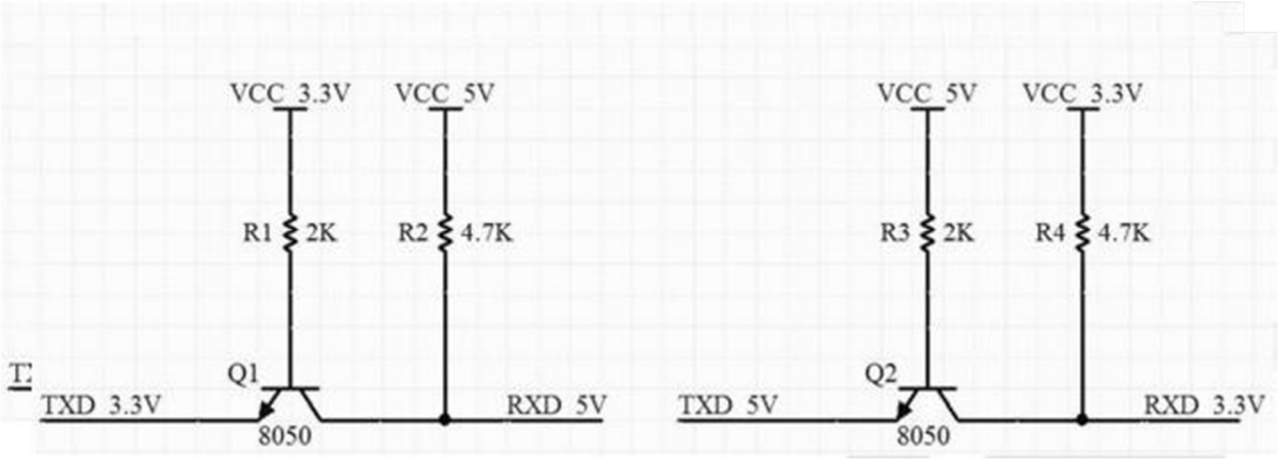

Copyright © 2023 Vaultek Safe Inc. All Rights Reserved

Federal Communication Commission (FCC) Radiation Exposure Statement
When using the product, maintain a distance of 20cm from the body to ensure compliance with RF exposure requirements.
This device complies with part 15 of the FCC rules. Operation is subject to the following two conditions: (1) this device may not cause harmful interference, and (2) this device must accept any interference received, including interference that may cause undesired operation.
NOTE: The manufacturer is not responsible for any radio or TV interference caused by unauthorized modifications or changes to this equipment. Such modifications or changes could void the user’s authority to operate the equipment.
NOTE: This equipment has been tested and found to comply with the limits for a Class B digital device, pursuant to part 15 of the FCC Rules. These limits are designed to provide reasonable protection against harmful interference in a residential installation. This equipment generates uses and can radiate radio frequency energy and, if not installed and used in accordance with the instructions, may cause harmful interference to radio communications. However, there is no guarantee that interference will not occur in a particular installation. If this equipment does cause harmful interference to radio or television reception, which can be determined by turning the equipment off and on, the user is encouraged to try to correct the interference by one or more of the following measures:

- Reorient or relocate the receiving antenna.
- Increase the separation between the equipment and receiver.
- Connect the equipment into an outlet on a circuit different from that to which the receiver is connected.
- Consult the dealer or an experienced radio/TV technician for help.

FCC Caution: Any changes or modifications not expressly approved by the party responsible for compliance could void the user's authority to operate this equipment.

ORIGINAL EQUIPMENT MANUFACTURER (OEM) NOTES

The OEM must certify the final end product to comply with unintentional radiators (FCC Sections 15.107 and 15.109) before declaring compliance of the final product to Part 15 of the FCC rules and regulations. Integration into devices that are directly or indirectly connected to AC lines must add with Class II Permissive Change.

The OEM must comply with the FCC labeling requirements. If the module's label is not visible when installed, then an additional permanent label must be applied on the outside of the finished product which states: "Contains transmitter module FCC ID: 2AONI-2450-8720DB16. Additionally, the following statement should be included on the label and in the final product's user manual: "This device complies with Part 15 of the FCC Rules. Operation is subject to the following two conditions: (1) This device may not cause harmful interferences, and (2) this device must accept any interference received, including interference that may cause undesired operation."

The module is allowed to be installed in mobile and portable applications A module or modules can only be used without additional authorizations if they have been tested and granted under the same intended end‑use operational conditions, including simultaneous transmission operations. When they have not been tested and granted in this manner, additional testing and/or FCC application filing may be required. The most straightforward approach to address additional testing conditions is to have the grantee responsible for the certification of at least one of the modules submit a permissive change application. When having a module grantee file a permissive change is not practical or feasible, the following guidance provides some additional options for host manufacturers. Integrations using modules where additional testing and/or FCCapplication filing(s) may be required are: (A) a module used in devices requiring additional RF exposure compliance information (e.g., MPE evaluation or SAR testing); (B) limited and/or split modules not meeting all of the module requirements; and (C) simultaneous transmissions for independent collocated transmitters not previously granted together.

This Module is full modular approval, it is limited to OEM installation ONLY. Integration into devices that are directly or indirectly connected to AC lines must add with Class II Permissive Change. (OEM) Integrator has to assure compliance of the entire end product include the integrated Module. Additional measurements (15B) and/or equipment authorizations(e.g. Verification) may need to be addressed depending on co-location or simultaneous transmission issues if applicable.(OEM) Integrator is reminded to assure that these installation instructions will not be made available to the end user.