SLIDER

SR20i | SR20 INSTRUCTION MANUAL

QUICK SETUP!

SCAN CODE

*USE PHONE CAMERA

or visit www.vaulteksafe.com/support/slider-series/

Thank You

At Vaultek® we stand behind our product and you our customer. On behalf of the entire team thank you for your purchase. We believe personal defense should be handled seriously and we're excited for you to experience the ultimate performance in smart-security.

Included Accessories: Vaultek Safe | Rechargeable Lithium-ion Battery | Charging Kit + Adapter | Security Cable | Hardware Mounting Kit | Owner's Manual | Quick Start Guide | Backup Keys (2)

Table of Contents

01	Get to Know Your Safe
02	Basic Operations / Secure Defense
03	Warnings
04 / 06	Battery
04	- Battery Installation
05	- Charging the Battery
07	Master Code Programming
08	Product Registration
09 / 12	Biometric Programming
10	- Programming Admin Prints 1 and 2
11	- Programming Additional Prints 3 to 20
12	- Deleting Fingerprints
13 / 14	Nano Key
13	- Pairing
13	- Unpairing
14	- Enable/Disable
15 / 16	Hot Keys
15	- Tamper Detection
15	- Stealth Mode
15	- Travel Mode
15	- Battery Status
15	- Low Battery Alarm
15	- Interior Light
15	- Interior Light Time Extension
16	- Bluetooth® Connectivity
16	- App Unlock
16	- Alert of Manual Unlock
16	- Factory Reset
16	- Dual Entry Mode
17 / 18	Vaultek® Bluetooth 2.0 App
17	- Overview
18	- Pairing
19 / 21	Securing Your Safe
19	- Multiple Plate Configurations
20	- Mounting Bracket Installation
21	- Removing Safe from Mounting Plate
22 / 23	Troubleshooting / FAQ
24	Customer Support / Warranty

Get to Know Your Safe

The Vaultek® SR20i/SR20 is a tough and rugged Bluetooth® access safe. Its solid structure and penetration resistant design makes it ideal for quick firearm access. Powered by a rechargeable lithium-ion battery, the safe combines high security with complete access control.

01: Biometric Scanner (Biometric Model Only)
02: Key Hole Cover
03: Backlit Keypad
04: Mounting Slots (4x)
05: Pistol Holster with Spare Magazine Slot
06: Included Mounting Plate
07: LED Light
08: Mounting Plate Release Clip
09: Battery Compartment Door
10: PROGRAM Button

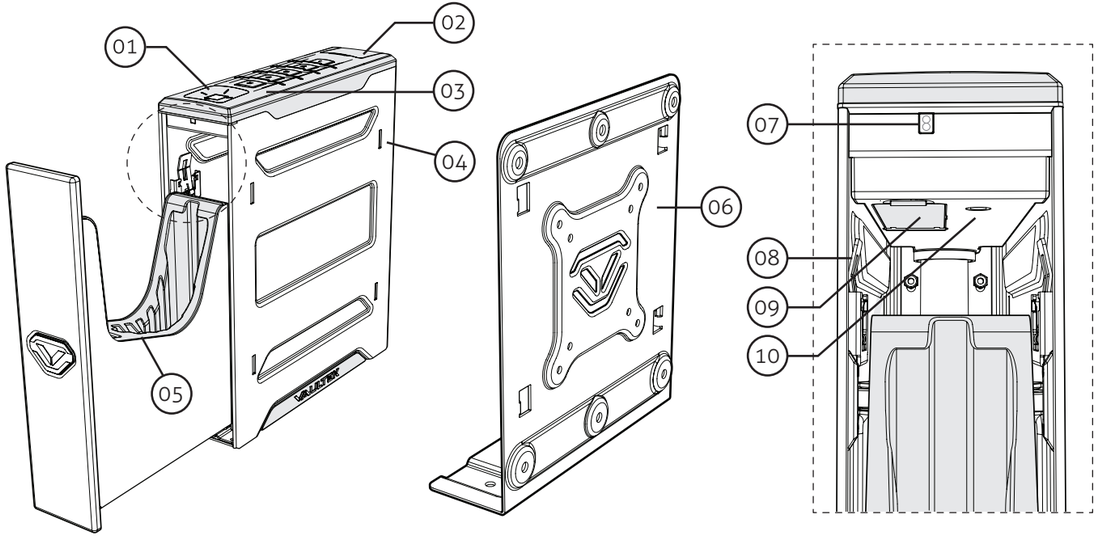

Basic Operations

Rechargeable Lithium-ion Power: Your Vaultek® safe is powered by a rechargeable lithium-ion battery and comes with a charging kit which includes a charging kit. See pages 04 to 06 for more information.

Biometric Scanner: (Biometric Model Only) Personalized access for up to 20 unique fingerprints. See pages 09 to 12 for more information.

Keypad: The numeric keypad responds quickly for rapid access and has a built-in proximity sensor that lights up when your hand brushes against the safe. See page 07 for more information.

Nano Key: (Optional Accessory) Remote for on demand access. See page for 13 and 14 for more information.

Vaultek® Bluetooh® App: Manage the safe with the Bluetooth® app. See pages 17 and 18 for more information.

Manual Key: Two keys are provided for manual access to the safe in the event the battery dies.

Secure Defense: How your Vaultek® safe keeps people out.

Rugged Construction: Reinforced steel construction helps prevent unwanted tools from attempting to break the safe open.

Anti-Impact Latch: Built to withstand forceful impacts and heavy slams.

Mounting Plate: Your Vaultek® safe can be secured via the included mounting plate and hardware to a vertical surface. See pages 19 and 21 for more information.

Security Sleep Mode: Activates when six (6) consecutive incorrect keypad entries are entered or (6) incorrect fingerprint scans are made. The safe will not accept any entries for four minutes. If any additional attempts are made the alarm will beep. The security sleep mode can be cleared upon unlock of the safe by any authorized access method including the backup keys.

For setup, tutorials, and FAQs visit **www.vaulteksafe.com/support/slider-series/**

Warnings

To prevent damage to your Vaultek® unit or injury to yourself or to others, read the following safety precautions before using this unit.

DO NOT PLACE OR STORE THE BACKUP KEYS INSIDE THE SAFE AT ANY TIME. IF THE BATTERY FAILS, YOU WILL BE UNABLE TO OPEN THE SAFE.

DO NOT expose to extreme heat or cold. Battery power may be affected.

DO NOT store loaded guns in this unit. Firearms are serious in nature and must be handled with respect. Store responsibly.

DO NOT get fingerprint sensor wet.

ALWAYS check to make sure door has latched when closing; door requires a firm press and locks automatically.

Be sure and follow all local and state firearm laws.

DO NOT operate a firearm without proper training and experience.

Check page 12 and 14 for Nano Key warnings.

Disclaimers:

NEITHER SELLER NOR MANUFACTURER SHALL BE LIABLE FOR UNAUTHORIZED ACCESS, ANY INJURY, LOSS OR DAMAGE TO PERSONAL PROPERTY DIRECT OR CONSEQUENTIAL, ARISING OUT OF THE USE OF, OR THE INABILITY TO USE THE VAULTEK® SAFE.

THE USER SHALL DETERMINE THE SUITABILITY OF THE VAULTEK® SAFE BEFORE THE INTENDED USE AND USER ASSUMES ALL RISK AND LIABILITY WHATSOEVER IN CONNECTION THEREWITH. VAULTEK® SAFES ARE NOT INTENDED TO PROTECT AGAINST ENVIRONMENTAL HAZARDS INCLUDING FIRE AND WATER.

The Bluetooth® word mark and logos are registered trademarks owned by the Bluetooth SIG, Inc. and any use of such marks by Vaultek Safe, Inc. is under license.

Battery: Installation

Your safe uses a 3.7V 18650 rechargeable lithium-ion with a flat top. A minimum 2000 mAh capacity is required, however 2200 mAh or higher can be used to increase operation time.

Battery Operation: Battery Installation

1. To get started open the safe using one of your backup keys via the keyhole at the back of the safe. Open keyhole cover, push key in and rotate key clockwise to open the safe.
2. Locate the battery door and open by depressing the tab near the front of the cover, allowing the door to fold down (Figure A/B).
3. Snap the battery (included in accessory box) into the battery door (Figure B/C). The battery door has molded snaps for the battery to clip into. Note that your Vaultek® safe automatically detects the polarity of the battery and can be snapped in either direction.

   Tip! Make sure to push battery to back of the battery door allowing the door to close properly.
4. Close the battery door. When the battery door is closed you will hear a short welcome tone and the keypad will light up.

   IMPORTANT! First time users should change the default code immediately after installing the battery to prevent unauthorized access to your safe.

   IMPORTANT! Register your safe online. Registration provides many benefits including three year warranty, technical support and ordering replacement keys should you misplace them. Go to vaulteksafe.com/support/ then select Product Registration.

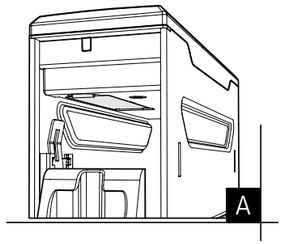

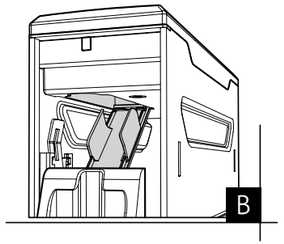

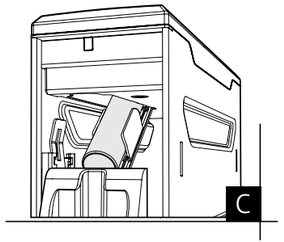

Battery: Installation

Battery Operation: Charging the Battery

Your Vaultek® safe is powered by a rechargeable lithium-ion battery and comes with a charging kit which includes an AC power adapter and a micro-USB cable. Safe and micro-USB cable can be used with all international power adapters. Under normal usage, a fully charged battery can last at least 3 months.

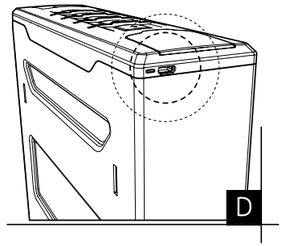

1 **To recharge the safe**, plug the micro-USB cable into the micro-USB receiving jack located on the back side of the safe (Figure D) and connect to a standard USB port or wall outlet using the AC power adapter. Approximate recharge time is 2.5 hours.

2 The LED next to the receiving jack on the back of the safe (Figure D) will glow RED indicating charging and GREEN indicating charged.

Battery Operation: Charging Tips!

A After installing the battery, use the charging kit provided to charge the unit 100%.

B The charging kit can also function as an external power supply, which means you can open your safe even when the battery is depleted.

C Leaving your safe plugged in continually will **not** harm the safe or battery. However, to preserve battery life we suggest that you unplug occasionally to allow the battery to cycle down.

D A specially designed Vaultek® powerpack is available as a separate accessory to extend operation time.

E The adapter used to charge the battery should output 5V/2000mA or above when using micro-USB cable.

See the FAQ section for additional information about the battery.

For setup, tutorials, and FAQs visit **www.vaulteksafe.com/support/slider-series/**

Battery: Maintenance

Battery Maintenance: Testing the Battery Power

To check the battery level, press and hold the '5' key on the keypad for 3 seconds. The keys will glow GREEN or RED to indicate the battery level:

Remaining Battery Capacity Level
If 4 keys glow green: 80%-100%
If 3 keys glow green: 60%-80%
If 2 keys glow green: 40%-60%
If 1 key glows green: 20%-40%
If 1 key glows red: 10%-20%
If 1 key blinks red: less than 10%

Battery Maintenance: Low Battery

If the first key blinks RED several times and you hear several rapid beeps when opening the safe, your battery level is critically low and your safe needs to be charged immediately.

Battery Maintenance: Soft Rest Tip

In the event the battery dies or a soft reset is performed (battery removal and installation) the safe will restore default settings for interior light, sound, and Alert of Manual Unlock feature. These settings will need to be readjusted, however the master code and fingerprint scanner will not be affected.

IMPORTANT! Use a 3.7V 18650 rechargeable lithium-ion battery with a flat top. A minimum 2000 mAh capacity is required, however 2200 mAh or higher can be used to increase operation time.

IMPORTANT! The adapter used to charge the battery should output 5V/2000mA or above when using micro-USB cable.

For setup, tutorials, and FAQs visit **www.vaulteksafe.com/support/slider-series/**

Master Code Programming

First time users should change the default code as soon as possible to prevent unauthorized access to your safe. You will also use this master code to pair the Vaultek® app on your smartphone, so it should be kept confidential.

Code Requirements Tips!

- Your code can be a minimum of 4 and a maximum of 8 digits. We recommend a code 6 to 8 digits in length using at least one of each key to make it more difficult for someone to guess your code. For your security, the safe will time out and sleep for 4 minutes if 6 incorrect entries are made.
- Two keys cannot be pressed simultaneously.
- Programming a new code will overwrite your previous code.
- **Tip!** The Vaultek® app will ask for your safe's master code during pairing and anytime you change the code the app will ask you to re-pair.

1 Open the safe. Note, keys are included. With the safe open, press and hold the "PROGRAM" button (3 seconds) (Figure E) until all keys turn RED and let go.

2 Enter your NEW master code.

3 **IMMEDIATELY** Press and hold the "PROGRAM" button a second time (3 seconds) until all keys turn RED and let go.

4 Enter your NEW master code a second time.

5 **IMMEDIATELY** Press and hold the "PROGRAM" button together a third time (3 seconds) until the safe beeps and all keys turn GREEN and let go. This tone confirms that the code has been reset.

Troubleshooting! If you make a mistake and the new code will not work, simply start over with step 1.

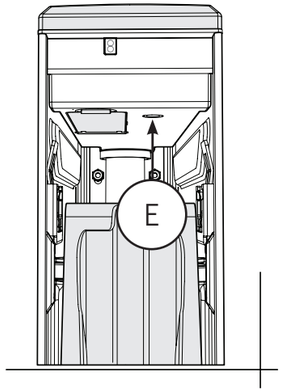

Product Registration

Vaultek® strongly encourages you to register your safe as soon as you receive it. **Registration provides many benefits including three year warranty, technical support and ordering replacement keys should you misplace them.** Your Vaultek® safe has a unique product number on the inside of the battery door and a 4-digit ID number engraved on the keys. You will need these numbers to register your safe.

1 Locate your product number. It is printed on the first page of this user manual and on the inside of the battery door (Figure K/L).

2 Find your 4-digit ID number engraved on the keys (Figure M).

3 Please visit the Vaultek® website at vaulteksafe.com and click Support/Product Registration.

4 Enter the required information in the form and click submit.

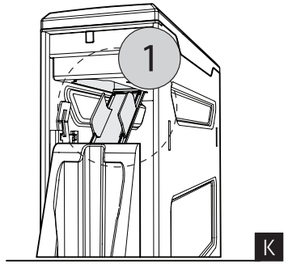

K

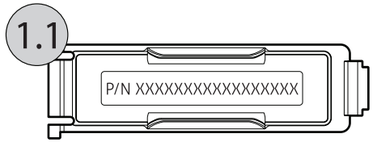

L

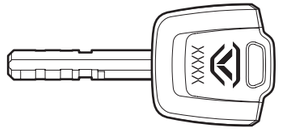

M

For setup, tutorials, and FAQs visit **www.vaulteksafe.com/support/slider-series/**

Biometric Scanner: Overview + Tips! (Biometric Safe Only)

Biometrics are methods of authenticating the identity of a person based on physical or behavioral characteristics. Biometric fingerprint authentication refers to technology that measures and analyzes human physical characteristics for identification and authentication purposes. The smart align biometric system guides your finger placement for consistent and accurate results.

Everyone has their own unique fingerprints, and what makes them unique is the pattern of ridges, valleys, and minutiae points that comprise an individual print. Vaultek® and their leading engineering group has developed proprietary technology to read and match fingerprints with unmatched speed and accuracy. That means that only authorized users have access to your valuables. The safe is capable of storing fingerprint data for up to 20 unique authorized users. A user consists of 5 scans of the same finger during registration. Once a user's fingerprint data is stored in the safe and encrypted, it cannot be copied or stolen.

Helpful Programming Tips!

- **Place the core of the fingerprint flat** (Figure F+G+H) over the center of the scanner (this allows the scanner to read where most of the fingerprint detail is located) see (Figure F).
- Adjust your finger slightly between scans for increased accuracy.
- Excessive moisture, lotions, or dirt will affect your fingerprint and may cause inaccurate sensor reading.
- **Troubleshooting!** If you are having difficulty with your print, program the same fingerprint 4 or 5 times. You have 20 slots available for programming and you can also try your thumb as it has more surface area to read.

F

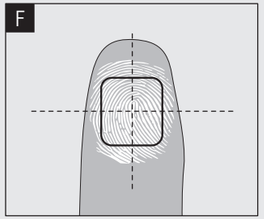

H

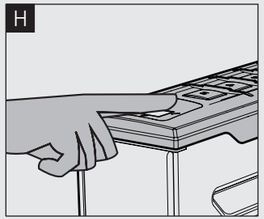

G

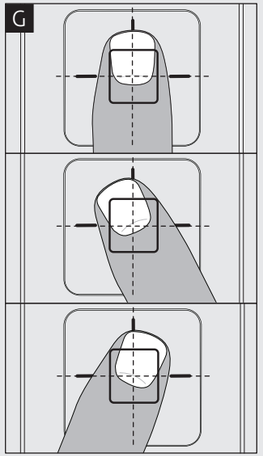

Biometric Scanner: Programming Admin Prints 1 and 2

The 1st and 2nd fingerprints will be recognized as administrative fingerprints and will be used to authorize additional users. To program additional users please refer to the next page.

Tip! The first two enrolled fingerprints are admin prints, and are required to authorize enrolling additional users (3-20).

Tip! Each fingerprint requires 5 registration scans to be enrolled into the safe.

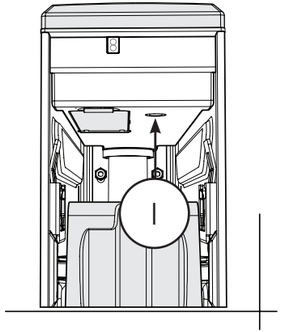

I

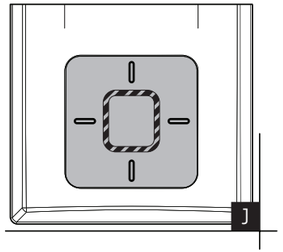

J

1. Open the safe. Program 1st fingerprint by quickly pressing "PROGRAM" (Figure I). The fingerprint LED (Figure J) will turn solid RED and the '1' key on the keypad will start blinking RED.
2. Using the helpful programming tips provided on page 09 place your finger on the fingerprint scanner for the first of 5 scans. When the safe beeps and the '1' key lights up GREEN remove your finger.
3. Place finger again over the scanner at a slightly different angle (see Figure G on page 09) until the safe beeps and the '2' key lights up GREEN and lift.
4. You will repeat this process until all keys (1-5) are solid GREEN. **This completes the enrollment for the first admin.**

Tip! Repeat steps 1 through 4 to add the 2nd administrative fingerprint. To program prints (3-20) refer to page 11.

Troubleshooting! If after step 1 all the keys are blinking RED and the fingerprint LED turns solid RED then refer to programming fingerprints 3-20 on next page.

Troubleshooting! If you are having difficulty with your print, program the same fingerprint 4 or 5 times. You have 20 slots available for programming and you can also try your thumb as it has more surface area to read.

Biometric Scanner: Programming Additional Prints 3 to 20

After the first two Admin fingerprints have been locked in, you can add additional users or fingerprints, up to 20 unique users in total. This is very helpful in the event the fingerprint scanner is having a hard time reading your initial fingerprints, or if you wish to grant other users authorized access to your safe. Any additional users programmed require authorization from one of the two Admin fingerprints.

1 Open the safe. Program additional fingerprints by quickly pressing and releasing the "PROGRAM" (3 seconds) (Figure I on page 10). When all keys (1-5) are blinking RED scan one of the administrative fingerprints.

2 Place one of the first two programmed administrative fingerprints on the scanner and remove when the safe beeps and the fingerprint LED blinks GREEN. When the '1' key starts blinking RED you can enroll a NEW fingerprint.

Troubleshooting! If the administrative print is left on the scanner too long the safe will begin to program that fingerprint into the safe again and not the NEW fingerprint. If this happens start over with step one.

3 Using the helpful programming tips provided on page 11 place the NEW finger on the scanner. When the safe beeps and the '1' key lights up GREEN remove your finger.

4 Place finger again over the scanner until the safe beeps and the '2' key lights up GREEN and lift. You will repeat this process until all keys (1-5) are solid GREEN.

Tip! Repeat steps 1 through 4 to add additional fingerprints.

Troubleshooting! If you are having difficulty with your print, program the same fingerprint 4 or 5 times. You have 20 slots available for programming and you can also try your thumb as it has more surface area to read.

Continue on next page to learn how to delete fingerprints.

Biometric Scanner: Delete Fingerprints

Individual fingerprints can not be deleted from the keypad on the safe. Following this procedure will erase all of the fingerprints including both administrative fingerprints. If you wish to delete individual fingerprints, refer to the Vaultek® app. This procedure will not affect the keypad master code.

1 Press and hold keys '3' and '5' together until **all** the keys light up RED and let go.

2 Enter your master code on the keypad. If the code is correct, all the keys will blink GREEN and safe will beep indicating deletion of **all** the fingerprints.

Nano Key (Optional Accessory)

Your Vaultek® safe supports quick access with Nano Key technology. Nano Key is not included but can be purchased separately at www.vaulteksafe.com or from one of our authorized dealers. **Take caution when using this feature and be responsible. Security can be compromised in the event the Nano Key is lost or stolen. Only pair Nano Key after thoroughly understanding the inherent risks.**

IMPORTANT! Nano Key should be mounted less than 6 feet away from safe for proper operation. Use in long range is not recommended as it may cause accidental opens.

Nano Key: Pairing

1 Press and hold the '3' key then "PROGRAM" button together (3 seconds) until all keys blink RED.

2 Aim Nano Key towards the safe and press. If the keypad flashes GREEN then the Nano Key has paired successfully.

Troubleshooting! If the keypad flashes RED then simply start over with step 1.

Nano Key: Unpairing

In the event a Nano Key Bluetooth 2.0 is lost or stolen, you can unpair the lost Nano Key 2.0 from the safe's memory. This will remove all paired Nano Key 2.0s from the safe.

Tip! Disabling the Nano Key function from the app or keypad will NOT delete a paired Nano Key from the safe's memory. In the event a Nano Key is lost or stolen, you can delete the lost Nano Key from the safe's memory by using a couple different methods:

1 Press and hold '3' key then "PROGRAM" button together (3 seconds) until all keys blink RED. This is the same sequence used when initially pairing. After the keys blink RED for 6 seconds the safe will delete a paired Nano Key from memory.

2 Anytime a new Nano Key is paired with the safe, the previous Nano Key will be erased from the safe's memory.

Nano Key: Enable/Disable

Enabling/disabling Nano Key Bluetooth 2.0 from the app or keypad will NOT unpair a Nano Key 2.0 from the safe's memory.

Nano Key 2.0 can be temporarily disabled as needed. When disabled, Nano Key 2.0 can not be used to open a paired safe. When enabled, Nano Key 2.0 will resume normal operation and open a paired safe.

1 Press and hold the '4' key and "PROGRAM" button together (3 seconds) to enable/disable Nano Key 2.0.

Nano Key: Warnings

Take caution when using this feature and be responsible. Security can be compromised in the event Nano Key is lost or stolen. Only pair Nano Key after thoroughly understanding the inherent risks.

WARNING anyone including children can access the safe via Nano Key.

WARNING On Demand entry mode can open a safe in another room and/or out of sight. To reduce risk of an unattended open safe we recommend using Progressive entry mode.

ALWAYS unpair Nano Key in the event it is lost or stolen.

IMPORTANT On Demand entry mode requires significant power usage and can greatly reduce operation time on a single charge. We suggest keeping the safe in Progressive entry mode. If using On Demand entry mode try keeping the safe plugged in.

Hot Keys

Tamper Detection: To check for tampering press and hold keys '2' and '4' together for 3 seconds. The '3' key will glow RED to indicate tampering or GREEN to indicate no tampering. You can reset the tamper detection by opening the safe through one of the authorized entry points.

Stealth Mode: To toggle the sound ON/OFF press and hold keys '1' and '3' together for 3 seconds. If the '2' key glows GREEN and beeps, the sound is ON; if the '2' key glows RED, the sound is OFF.

Travel Mode: Save battery life by disabling the proximity sensor, fingerprint sensor, keypad, and Bluetooth features. To toggle travel mode ON/OFF press and hold keys '1' '3' and '5' together until the safe beeps and the keys light up. If the keys glow RED and beeps, the safe is disabled; if the keys glow GREEN and beeps, the safe is operational.

Battery Status: To check the battery level press and hold the '5' key on the keypad (3 seconds). Keys from '1' to '4' will glow GREEN or RED to indicate the battery level. See pages 04 to 06 for more information.

If 4 keys glow green: 80%-100%
If 3 keys glow green: 60%-80%
If 2 keys glow green: 40%-60%
If 1 key glows green: 20%-40%
If 1 key glows red: 10%-20%
If 1 key blinks red: less than 10%

Low Battery Alarm: Your safe features a low battery alarm that will sound when the safe is low in battery, and will sound continually every 8 minutes until the battery dies. To toggle press and hold keys '1' '2' and "PROGRAM" button together. If the keypad flashes RED, the alarm is disabled; if the keypad flashes GREEN, the alarm is enabled. The alarm is ON by default.

Interior Light: To toggle interior light press and hold '1' key for 3 seconds. With the light toggled ON it will illuminate when the safe opens and you can also adjust the brightness in the app.

Interior Light Time Extension: To add additional time to the interior light press and hold the '2' key for 3 seconds. The light will turn on for an additional 10 seconds.

Bluetooth® Connectivity: To toggle the Bluetooth ON/OFF press and hold keys '2' and '5' together. If the '3' and '4' glow RED Bluetooth is OFF. Re-enable by pressing and holding '2' and '5' together until **all keys** light up RED then enter your master code. When Bluetooth is toggled OFF all app functions will be disabled and your safe is undiscoverable.

App Unlock: By default, the unlock feature on the Vaultek® app will be disabled. To toggle this feature press and hold keys '1' and '4' followed by the "PROGRAM" button together for 3 seconds. If keys '2' and '3' turn GREEN the unlock feature is enabled. If keys '2' and '3' turn RED the unlock feature is disabled.

Alert of Manual Unlock: If Alert of Manual Unlock is on, and someone opens the safe with either the key or by picking the lock, the keypad will start flashing. To toggle Alert of Manual Unlock press and hold keys '2' and '3' then "PROGRAM" button together for 3 seconds. The keypad will flash GREEN indicating enabled or RED indicating disabled. If ON and activated it can only be cleared by entering master code. Default is OFF.

Factory Reset: The Factory Reset erases all programmed information and restores the safe to its default settings. This includes removing any enrolled fingerprints and resetting the master code to 1-2-3-4-5. The safe will need to be reconfigured again to work with the Vaultek® Bluetooth® app. To perform a factory reset, press and hold keys '1' and '5' and "PROGRAM" button together until the keypad flashes green and the safe restarts. Once the safe restarts remove the battery from the safe, and then put the battery back.

Dual Entry Mode (Biometric Model Only): Requires input of master code and enrolled fingerprint or vice versa to open safe. To toggle On/Off press and hold keys '3' and '4' and "PROGRAM" button together for 3 seconds. If the keypad flashes RED the feature is OFF, if the keypad flashes GREEN the feature is ON. This mode requires that at least one fingerprint be programmed in the safe.

Delete Fingerprints (Biometric Model Only): To delete all fingerprints on the safe press and hold keys '3' and '5' at the same time for 3 seconds until all keys (1-5) light up RED, and then enter the safe's master code. This will remove all the fingerprints. You can delete individual fingerprints in the Vaultek® Bluetooth® app.

Vaultek® Bluetooth 2.0 App: Overview

The Vaultek® app lets you get the most out of your safe. Using the app gives you access and control over features that are not possible using the keypad interface alone. To get started, download and install the Vaultek® app for free from the Google Play store or Apple store, and pair your phone with your safe.

Vaultek Bluetooth App: App Features

Unlock Safe Within Range (Optional) | Check Battery Levels | Toggle Sound On/Off | Adjust Interior Light | Manage Fingerprint IDs (Biometric Model Only) | View History Log | Toggle Nano Key Entry Modes

Helpful Tips!

- **Toggle Remote Unlock:** By default, the unlock feature on the Vaultek® app will be disabled. If you wish to enable this feature, press and hold keys '1' and '4' followed by the "PROGRAM" button together for 3 seconds. If keys '2' and '3' turn GREEN the unlock feature is enabled. If keys '2' and '3' turn RED the unlock feature is disabled.

- **Toggle App Connection ON/OFF:** ON by default. The connection toggle when OFF stops all app communication, such as the phone unlock command and eliminates any outside sources from connecting to the safe over Bluetooth including already paired devices. To toggle app connections ON/OFF press and hold key '2' and "PROGRAM" together at the same time for 3 seconds. The keypad will flash RED indicating connections are OFF, or GREEN indicating connections are ON. When OFF, a paired phone will not be able to operate the app until the connection has been turned ON.

- **History Log Timestamp:** Any actions recorded in the history log before your phone is paired with the safe will show a timestamp from the safe's default clock - this may not match your phone's time or date. To sync your phone's time with the safe's history log, simply open and close the battery door and immediately re-pair your phone before performing any other actions.

Vaultek® Bluetooth® 2.0 App: Pairing

VAULTEK® BLUETOOTH® 2.0 APP

1 **Download the App:** Scan the QR code with your phones camera to download the Vaultek® Bluetooth® 2.0 app from Google Play and Apple Store.

2 Make sure your phone's Bluetooth® settings are set to ON, and **open the Vaultek® Bluetooth® app to begin.**

IMPORTANT! You must be within Bluetooth® range to pair your phone with your safe. The approximate range is 25 feet.

3 **Create a Pattern Lock:** This is an added layer of protection to safeguard your safe and prevent unauthorized access in the event your phone is misplaced. To create your pattern lock, simply drag your finger along the screen to connect at least four dots. This unique pattern will be required each time you open the app.

4 **Select Your Safe:** After a few seconds your safe will appear in the search. You can drag the screen downwards to refresh if you are not seeing your safe listed. Select your safe, and follow the on screen prompts to pair.

Tip! This pairing sequence offers enhanced security protection and will allow up to two different phones to pair with your safe.

Toggle Remote Unlock: Refer to page 17 on how to enable this feature.

Privacy Notice: Vaultek Safe, Inc. does not access your personal information. The app may require some permissions to store personal preferences such as your safe settings and Bluetooth settings to communicate with your safe. In no way do we gain or collect any personal information from you.

Securing Your Safe

Your Vaultek® safe can be secured via the included mounting plate and hardware to a vertical surface.

Securing Your Safe: Multiple Plate Configurations

Your Vaultek® safe includes a mounting plate with multiple configurations for mounting. A four point configuration can be used for standard vertical surface mounting (1.1), two point mounting for installing in a vertical wall stud (1.2), and additional base mounts (1.3).

The mounting plate also features standard VESA 75mm and 100mm fitment for use with other adapter plates (1.4). Hardware for VESA fitment not included.

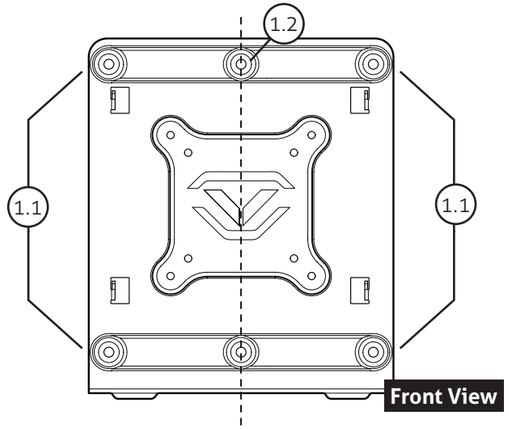

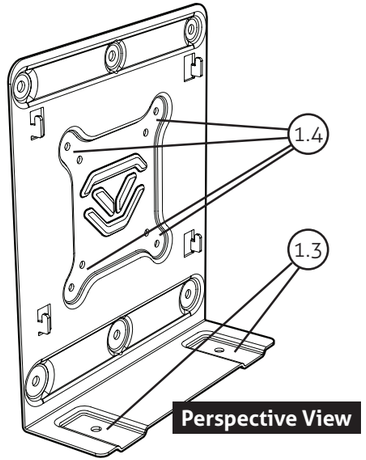

For setup, tutorials, and FAQs visit **www.vaulteksafe.com/support/slider-series/**

Continue on next page for more information about Securing Your Safe.

Securing Your Safe: Mounting Bracket Installation

Tip! Your safe can install on the mounting plate from the left or right side. When installing the plate, be sure the bottom is parallel to the floor (Figure P) so the safe opens horizontally. Angling the plate or aiming the safe downwards can affect the rail mechanics and prevent safe from opening correctly.

1. Locate mounting surface, making sure the safe will have enough clearance to open properly prior to installing.
2. Hold mounting plate in place and use a pencil to mark desired hole locations. Drill 7/32" inch pilot holes.
3. Using hardware provided fasten mounting plate in place and tighten firmly.

Securing Your Safe: Mounting Safe

1. Locate the 4 receiving slots located on the safe sides, and the 4 tabs located on the mounting plate.
2. Fully insert the tabs on the mounting plate into the receiving slots on the safe (Figure N/O), and press the safe downwards to lock in place (Figure P).

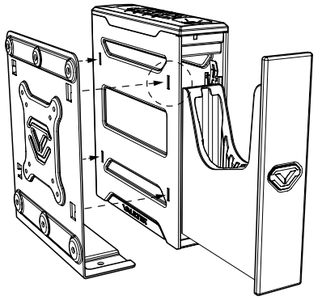

N

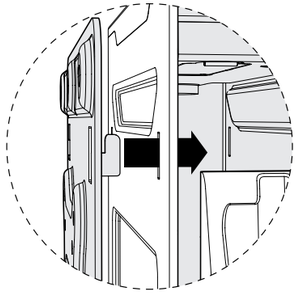

O

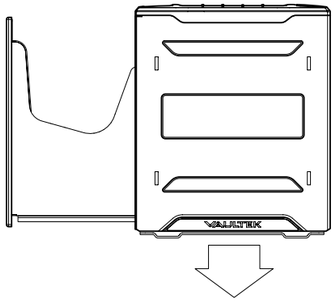

P

Securing Your Safe: Removing Safe from Mounting Plate

1 Open the safe. Locate the release clip on the same side as the attached mounting plate.

2 Use your thumb or finger to pull the release clip back, and lift the safe off the mount at the same time (see Figure Q/R). The safe will not remove without pulling the release clip back.

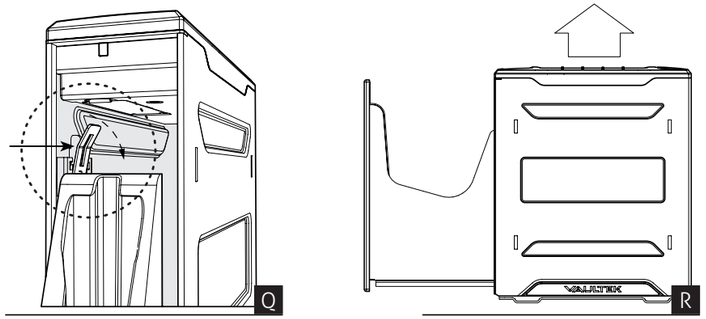

Securing Your Safe: Aftermarket Configuration

Your mounting plate features additional pre-drilled holes for the addition of aftermarket brackets or modifications (see Figure 1.4 on page 20) using VESA standard fitment. This is great if the environment requires the safe to be configured in a certain manner beyond the standard mounting options available.

For setup, tutorials, and FAQs visit **www.vaulteksafe.com/support/slider-series/**

Troubleshooting More online at vaulteksafe.com and select Support

If you experience any issues with your safe, try the following solutions.

The app history clock data does not match up with my phone's clock: To sync your phone's time with the safe's history log, simply open and close the battery door and immediately re-pair your phone before performing any other actions. Refer to page 17.

The unlock feature on the app is grayed out: By default, the unlock feature on your app will be disabled. If you wish to enable this feature, press and hold keys '1' and '4' followed by the PROGRAM button together for 3 seconds. Repeat the sequence to disable the unlock feature.

Fingerprint scanner works sometimes and not others: (Biometric Model Only) The most helpful tip is to program the same finger 4 or 5 times. You have 20 slots available for programming and you can also try your thumb as it has more surface area to read. More tips on page 09.

The keypad is not responding: Open and close the battery door. This is a soft reset for the safe. See if you are able to open the safe using the keypad or reprogram the safe's master code. If you are still experiencing issues please contact our support team by visiting vaulteksafe.com and select Support.

Sound is not working: To toggle the sound ON/OFF press and hold keys '1' and '3' together for 3 seconds. If the '2' key glows GREEN, the sound is ON; if the '2' key glows RED, the sound is OFF. If the sound is toggled on and you still can't hear it, have someone in your house listen. The tones are high pitch.

Unable to change master code: Refer to page 08 of the user manual or check our tutorials online at vaulteksafe.com and select Support.

Soft Reset Tip! Open and close the battery door. This is a soft reset to the safe.

STOP! Do not return to retailer. If you have any questions about your Vaultek® safe or need help configuring the system, please visit Support at vaulteksafe.com.

FAQ More online at vaulteksafe.com and select Support

Can I keep the safe plugged in at all times? Leaving your safe plugged in continually will **not** harm the safe or battery. However, to preserve the battery life we suggest that you unplug occasionally to allow the battery to cycle down.

What happens to the master code that is stored in my Vaultek® safe when the battery dies? The safe retains the master code in the event of battery failure. Once the power is restored by inserting the AC adapter cable, the unit will function as it did before the power loss.

What type of battery does my Vaultek® safe use? Use a 3.7V 18650 rechargeable lithium-ion battery with a flat top. A minimum 2000 mAh capacity is required, however 2200 mAh or higher can be used to increase operation time. This type battery is commonly available and higher capacity batteries are available at vaulteksafe.com.

Can I use a battery of more than 2000 mAh? Yes, a minimum 2000 mAh capacity is required, however 2200 mAh or higher can be used to increase operation time.

What happens if I lose the keys? First, make sure you register your safe in the event you do lose your keys. Visit vaulteksafe.com and select Support for assistance. Be prepared to provide your order details and Product Number.

Can I travel with my Vaultek® safe through US Customs or TSA Security at the airport? Yes, there are no restrictions on carrying this type of item. Please be aware that you may be asked to open your safe rather than passing it through x-ray. We recommend that an authorized user be present during the transport of this item in case such a request is made by a government authority. If transporting a firearm, be sure the safe is checked or included with checked luggage and that you notify your airline agent at check in.

Don't see your question answered.
Send us your question to support@vaulteksafe.com.

Customer Support

If you have a problem with your Vaultek® safe that is not answered in the FAQ section of this manual, we encourage you to visit www.vaulteksafe.com and select Support.

Limited Warranty (Terms and Conditions)

VAULTEK® IS COMMITTED TO PROVIDING PRODUCTS OF HIGH QUALITY AND VALUE AND MAKES EVERY EFFORT TO ENSURE ITS PRODUCTS ARE FREE OF DEFECTS.

Vaultek® guarantees your safe will be free of defects in materials or workmanship for a period of two years from the date of original purchase from an authorized dealer and three years with verified product registration.

The warranty is only valid for the original purchaser and not transferable. This warranty is only valid for products purchased and operated in the U.S. This warranty does not cover abuse, misuse, use in any manner for which is not designed, neglected, modification, damage inadvertently caused by the user, accidents and/or tampering.

If service is needed Vaultek will, at its option, exchange or repair without charge for parts or labor. Upon authorization of warranty service, customers are responsible for securely packaging product. Additionally, customers are responsible for costs of shipping to and from Vaultek service center.

If the claimed defect cannot be identified or reproduced, customers will be held responsible for the costs incurred. Please have the following information available before you begin a claim with Vaultek:

-Purchaser's name, mailing address, email address, and a phone number.
-Copy of receipt or online order number (if purchased directly from us or Amazon)
-Authorized Dealer Name (if applicable)
-Detailed description of the problem

NEITHER SELLER NOR MANUFACTURER SHALL BE LIABLE FOR ANY INJURY, LOSS OR DAMAGE, DIRECT OR CONSEQUENTIAL, ARISING OUT OF THE USE OF, OR THE INABILITY TO USE THE VAULTEK® SAFE.

FCC

This device has been evaluated to meet general RF exposure requirement, and this device can be used in portable exposure condition without restriction.

FCC statements:
This device complies with part 15 of the FCC rules. Operation is subject to the following two conditions: (1) this device may not cause harmful interference, and (2) this device must accept any interference received, including interference that may cause undesired operation.
NOTE: The manufacturer is not responsible for any radio or TV interference caused by unauthorized modifications or changes to this equipment. Such modifications or changes could void the user's authority to operate the equipment.

NOTE: This equipment has been tested and found to comply with the limits for a Class B digital device, pursuant to part 15 of the FCC Rules. These limits are designed to provide reasonable protection against harmful interference in a residential installation. This equipment generates uses and can radiate radio frequency energy and, if not installed and used in accordance with the instructions, may cause harmful interference to radio communications. However, there is no guarantee that interference will not occur in a particular installation. If this equipment does cause harmful interference to radio or television reception, which can be determined by turning the equipment off and on, the user is encouraged to try to correct the interference by one or more of the following measures:
- Reorient or relocate the receiving antenna.
- Increase the separation between the equipment and receiver.
- Connect the equipment into an outlet on a circuit different from that to which the receiver is connected.
- Consult the dealer or an experienced radio/TV technician for help.

For setup, tutorials, and FAQs visit **www.vaulteksafe.com/support/slider-series/**

VAULTEK®

37 North Orange Ave. Suite 770 Orlando, FL 32801

VAULTEKSAFE.COM

REV 030322