LEJU ROBOT

LEJU(SHENZHEN)ROBOTICS CO.,LTD

Room B, 9th Floor,Building C, Tongfang Information Harbor,
Hi-Tech Park North, Nanshan District,ShenZhen, China

www.lejurobot.com

sales@lejurobot.com

+86 755 2100 0548

©2017 Leju

Aelos 1s_v1.0

AELOS 1S

Aelos Humanoid Robot

AL1S-YL-E1.E

User Manual

Hello,I’m Aelos

Dear user(s), congratulations! Now you are the friend of Aelos 1s, the intelligent robot. We hope you can have fun with the robot immediately, but we suggest you to read this manual carefully to get familiar with Aelos 1s before using, now let`s start!

Table of Contents

Chapter One: Introduction ---------- 1
Chapter Two: Operation Instruction ---------- 4
Chapter Three: Troubleshooting ---------- 15

Safety Precautions

Dear user, thank you for purchasing and congratulations on becoming the owner of our ingenious robot, Aelos! Before startingyour trip with Aelos, please refer to the below notices:

1.Children should use under adult`s supervision.

2.Please keep a safe distance from the robot while it is operating to avoid personal injury.

3.Never disassemble Aelos on your own. For repairs, please take reasonable maintenance or contact qualified service personnel according to the warranty terms.

4.Keep the robot away from water or fire. In addition, please put the robot on flat or smooth surfaces, as uneven surfaces, inclining or wet floors, or areas with obstacles may stall him or cause him to fall while operating.

5.Avoid violent impact to the robot whiling playing the robot, turn off the robot immediately if the robot is on abnormal condition to prevent damaging the robot.

6.While the robot is operating, do not break off the robot joints to prevent damaging the servo or the main board.

7.While operating the robot, please place the robot on the flat surface or the center of the table, to avoid the risks of falling down and damage.

8.It needs around 1.5 hour to fully charge the robot, please use the orig-ina ladaptor when charging the robot.
9.The servo will be overheat after using for a long time. This is a normal situation. Please turn off the robot until the servo recovers its normal te-mperature.
10.If the robot is emitting smoke or scorched smell, please turn off the robot immediately and contact our after-sales service center.
11.If the robot is damaged by water or other foreign matters, please turn off the robot immediately and contact our after-sales service center.
12. If the robot can not well connect with Wifi or perform actions, reset the robot or recharge the robot to full battery and try again. Do not imp-act the robot with violence.
13. If the servo is damaged because of overtime using, please contact the manufacturer for maintenance. Do not replace the components by yourself.
14. Robot is precision device. Please do protective measures when tran-sporting the robot.
15. Please avoid continuous fast walking for more than 3 minutes, othe-rwise it may affect the service life of the robot servo.
16. With updated versions, the built-in apps of the robot and the pictures of the apps might vary.
This manual contains important information. Please keep it for future reference.

1 Introduction

Product List

Robot*1 Quick Guide*1 User Manual*1
Charger or Adaptor*1 USB Cable*1

Specifications	
Dimension	346*224*118mm
Net Weight (include battery)	1.8KG
Working Voltage	DC 6.8V-9.6V
Working Current	1A-3A
Battery Capacity	2150mAh
Peripheral interface	Micro USB , DC Charge Port
Storage	1G TF card(Built-in)
Working Environment	Temperature -10°C~45°C Moisture 10%~95%

Battery

The battery is located in Aelos' abdomen, and is built in with the robot, so please do not disassemble.

Main Board

The main board is located in the back of the robot, do not insert any foreign object into the main board to avoid damaging the robot.

ATTENTION

Please use the original adapter when charging the robot! The indicator will turn red when the robot is being charged, it needs around 1.5h to fully charge the robot, then the indicator will turn green when charging is completed. Then pull the adapter out of the charging port. Pay attention not to charge the robot over time to avoid damaging the battery. Then you can play with the robot under full battery condition. When the battery is less than 20%, the robot will voice prompt "Low power!" ; when the robot is run out of battery, it will voice prompt "I am so sleepy, please charge now." . Do not overcharge the robot, otherwise it will damage the battery.

Product Overview

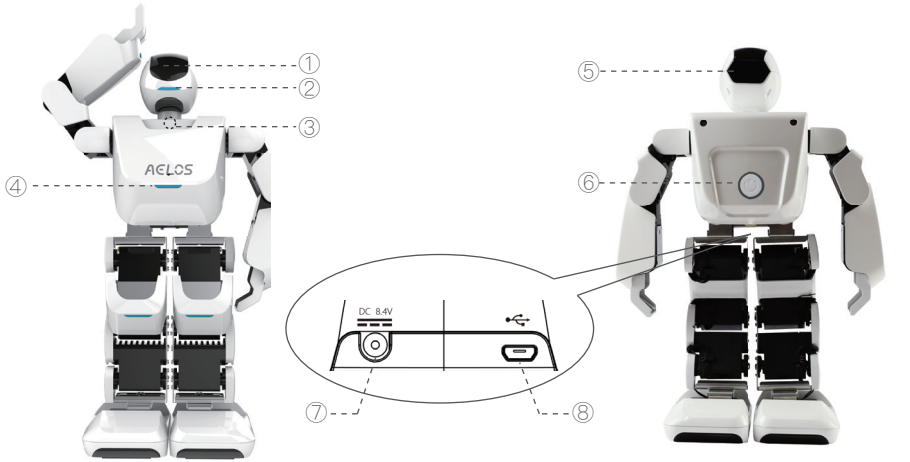

① Head Touch Area ② Head LED(WiFi indicator light) ③ Microphone ④ Chest LED

⑤ Speaker ⑥ Switch Button ⑦ DC Charge Port ⑧ Micro USB(Only support for data transfer)

2 Operation Instruction

2.1 Turn on the robot

The switch button is located on the back of the robot, long press the button for 3 seconds to turn on the robot, for more functions of the button, please refer to below:

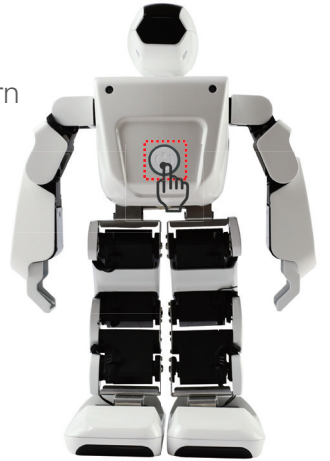

Turn on the robot: long press the switch button for around 1 seconds.
Turn off the robot: long press the switch button for around 3 seconds.
Stop: press the switch button once
Reset: press the switch button twice

When the robot is working in a normal state, the chest LED and the switch button light are blue; when the robot is in low battery state, the robot will voice prompt and the switch button light will turn red. When the robot goes into sleep mode, theswitch button light will be off, and the chest LED will blink every second.

2.2 Scan & connect the robot

By switching power "On" , AELOS chest LED light will turn blue. This indicates that he is in his standby state. Then start the APP on your phone:

1. The app will scan for nearby robots through your device' s Bluetooth as shown in pic2.2–1, click the one that you want to connect.
2. When it indicates "connected successfully" , means you can begin to operate your robot.

pic 2.2–1

2.3 Control the robot

Now you can control and play with the robot(refer to the quick guide). Then how to operate the robot through GamePad of the App?

1. Get into the GamePad mode(pic 2.3–1), select【settings】icon.
2. In the pic2.3–2, first click the button on the left, and then select the action on the right that you want to configure, save and go back to the last interface.
3. Click the configured buttons, it will then perform the corresponding actions that you configured in step 2.

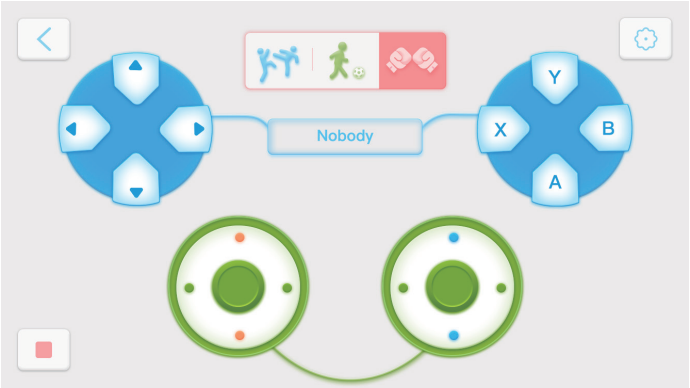

pic 2.3–1

pic 2.3–2

In addition to perform the actions you set, you can also let Aelos perform the actions from the Action Store. Download the actions you want and click【play】to perform the actions. And if you already downloaded the actions, you can also configure the specified buttons to perform it through GamePad. For details please refer to the previous sections.

⚠ **Do not touch the robot joints while it is operating !**

2.4 Connect the robot to WIFI

Make sure you phone network is stable, return to the homepage, click【Menu】 icon and select【Robot Network】, enter the network password in the pop up interface, click【Connect】, you will hear “Internet connected. Let’s talk!” means the connection is successful, then the head LED will light up. If “connected failed”, please retry the above steps.

pic 2.4–1

2.5 Voice Command

After connecting successfully with the WiFi, you can have conversations with Aelos, such as, ask Aelos to move or adjust its voice volume, please refer to the below conversations.You can interrupt the robot by touching its head or interrupting command “Hi, Aelos”.

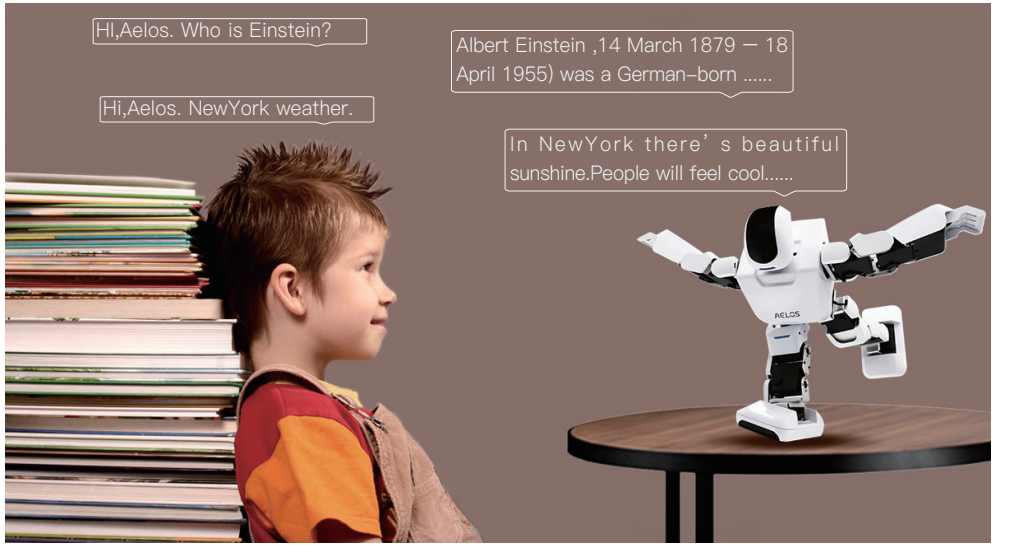

Just simple chat? Sure not! Aelos will become your encyclopedia. Have a try!

Content	Command
Wake up the robot	You can wake up the robot by calling "**OK, Aelos**"、"**Hi Aelos**"、"**Hey Aelos**" or by touching its head.
Basic action	You can voice control the robot to **move forward, move back, move left, move right, turn left, turn right, fast walk, stop,** etc.
Dance action	Speak to Aelos: "**dance for me, Aelos**" , then the robot will perform a **dance randomly**. you can also ask the robot to perform a dance with specified song, this can only be done after the specified dance is downloaded.
Music	You can ask Aelos to **sing songs randomly**. you can also ask the robot to sing a specified song, this can only be done after the specified song is downloaded.
Weather Forecast	By simple key words: **city name + weather**, Aelos will tell you what the weather is of the named city.
Pedia	Such as: What is spider-man. Then Aelos will introduce you what the word "spider-man" is.
Fable Story	You can also ask Aelos to tell stories randomly.
Time or date	You can know what date is it by asking the robot
Adjust sound volume	You can adjust the robot`s voice by speaking to the robot such as: **speak louder, speak softly**.

Apart from the above specified conversation, our robot Aelos can also amuse you in other questions, for example, you can try to ask Aelos the below questions:

Questions		
What can you do? Hi, Aelos, what can you do?	Good morning!	Push up!
Self introduce/Self introduction/ Introduce yourself	Good night!	How tall are you? What's your height?
What's your name?	Sit down!	How heavy are you? What is your weight?
How old are you?/What's your age?/ your age	Stand up!	Let's play football!
Where do you come from? Where are you from?	Today is my birthday!	Shot!
Hello	Today is Christmas!	It 's good for you today! Are you happy today?
Do you like me?/I like you/ I love you	You are wonderful! You are so powerful!	Shake hands Let's shake hands
Nice to meet you!	you are cute! You are so smart!	Bye/Byebye/I have to go/ I'm going to travel
Are you a boy or a girl?/Are you a boy Are you a girl?/Are you a human	What will you imitate?	Do you want to charge? Do you still have electricity?

We will continue update more interesting conversations all the time, please pay attention to our Aelos 1s application.

2.6 Create and edit new action

You can design actions for your robot through the app. Choose【DIY Action】in the home page, then click【Create your action】to get into pic2.5–1 interface.

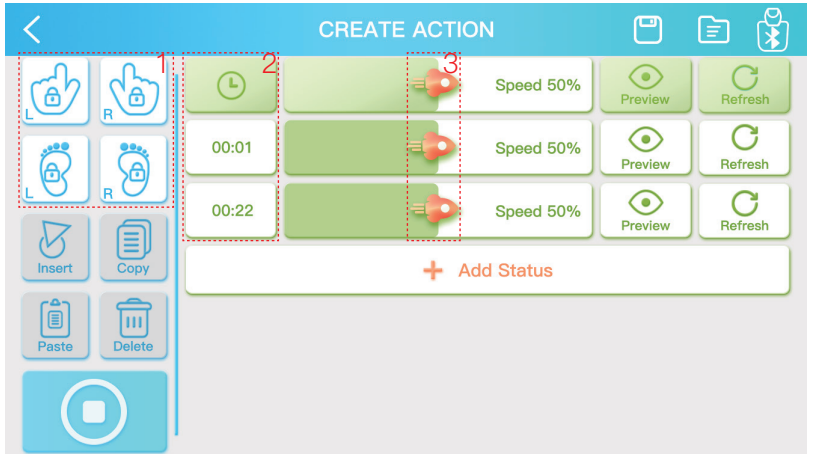

pic2.5–1

How to unlock/lock the robot?

Click area 1 in pic2.5–1 to unlock/lock the corresponding limb. The icon will be dark when it is in lock state while white when it is in unlock state.

How to adjust the speed of the action?

Long press the speed bar in area 3 of pic2.5–1 to adjust the speed of the action.

How to select an action?

Select and click the action on the right area 2 of pic2.5–1, the action will be dark when selected, click again to cancel selecting the action.

How to copy, paste, insert or delete the action?

The copy, paste, insert or delete button can be used only after you select a specified action. And these buttons will be dark when they are useful.

Here let us learn how to create a new action, for example, “spread the wings”：

Step1: slightly adjust the feet
Unlock the robots hands, stretch out both hands, and then lock them. Unlock the robots feet, hold down the feet, adjust the robots body slightly tilt to left, make sure the robot is in a balance state and then lock both feet, click “create action”.

Step 2: lift the left foot
Unlock left foot, lift the left foot for about 3~5cm, lock the foot and then click “create action”.

Step3: spread the wings
Unlock right foot, lean forward the robots body, lock the right foot; unlock the left foot, lift the left foot, make the left foot parallel with the ground, lock the left foot, and click “create action”. Then the action of “spread the wings” is created.

3 Troubleshooting

Q:Can not search the robot out?

1. Check if the robot`s switch button is turning on;
2. Check if the robot`s battery is sufficient;
3. Make sure the phone Bluetooth is in turning on position;
4. Restart the robot and phone APP, and try connect again

Q:Aelos can not reset to the initial state, nor execute the actions?

1. Double click the switch button to restore to the initial state.
2. Turn off the robot, and restart again.

If the above methods can not work, please contact our after-sale service center for maintenance.

Q: No movement of the robot?

1. The battery is low, please recharge the robot first.
2. Make sure you have successfully configure the actions in the GamePad.

Q:The robot can not respond to my voice?

1. Please make sure the robot is well connected to the network, if so, the robot head LED light will be blue, if not, means the robot has failed connecting to the network, reconnect again.
2. Make sure the network signal is good.
3. Please check if the robot is in sleep mode. If so, try waking it up first.
4. Voice control needs to be set up in a relatively quiet environment. Please speak standard English when setting voice commands(otherwise, your voice may not be recognized, Aelos may not respond, or he may operate incorrectly).

Tips: it would be better to keep the distance within 1meter from the robot while having conversations with the robot.

Q:The robot can not stand up normally after turning on?

1. The battery is low, please recharge the robot first.
2. Check if the servo motor is broken, if so, please contact manufacturer and send back the robot for maintenance.

Q:Can I charge the robot through power bank or other phone adapter?

A:No. Please use the provided adapter to recharge the robot.

Q:How to interrupt the robot speaking?

A: you can interrupt the robot speaking by touching the robot`s head or voice command.

Q:The robot can not response to the App while charging?

A: For safety concerns, the robot can not perform actions, but have speech interactive while charging.

Q:The robot can not be turned on even after long pressing the switch button?

A: Please make sure the robot is fully charged, if the battery is low, fully charged the robot first and try turning on again.

Disclaimer

In order to safeguard the legitimate rights and interests of consumers and clarify the responsibility of the products sold by Leju(Shenzhen)Robotics Co.,Ltd(herein –after referred as Leju Co.), consumers are suggested to carefully read this disc –laimer clauses before purchasing. This disclaimer clause includes the waiver of liability, the waiver of right, the undertaking of the risk and compensation agree –ment. Consumers who buy products from Leju Co. are deemed to agree and voluntarily comply with these disclaimer clause, and voluntarily fulfill their ob–ligations.

1. Please carefully read this user manual before using the robot. And please use it strictly according to the instructions of this user manual. Leju Co. shall not bear any legal responsibility of the product hardware failure, damage, or personal injury due to improper usage of the product.
2. Users can use the APP that developed and controlled by Leju Co. to operate the robot. without the permission of Leju Co., users have no rights to decompile, upgrade, copy or improve the relevant software. If so, Leju Co. has the right to pursue its legal liability.

3. Please use the APP or PC terminal software specified by Leju Co. to control the robot. Leju Co. shall not bear any responsibility of product failure (include t–he robot body and its components), damage, or personal injury due to improper usage or unauthorized modification of the product or software.
4.In the process of purchasing or using the robot, customers may need to register an account and set a password. Customers should take care of the account and password, and should take all responsibilities of the account`s activities by his/her own, Leju Co. shall not bear any responsibility of the loss due to the loss or the leak out of the account.
5. If customers gain other information from linking our APP with other software, we shall not bear any responsibility of the authenticity, accuracy and completen–ess of these information. And since these information are not under control of the Leju Co., we shall not bear any responsibility of any loss caused by using th–ese information.
6. As for complimentary product or services which Leju Co. provided, Leju Co. shall not bear any responsibility of loss caused by the defects of these product or services.

Note: Information in this manual is subject to change without notice.

This device complies with part 15 of the FCC Rules. Operation is subject to the condition that this device does not cause harmful interference (1) this device may not cause harmful interference, and (2) this device must accept any interference received, including interference that may cause undesired operation.Changes or modifications not expressly approved by the party responsible for compliance could void the user's authority to operate the equipment.

NOTE: This equipment has been tested and found to comply with the limits for a Class B digital device, pursuant to Part 15 of the FCC Rules. These limits are designed to provide reasonable protection against harmful interference in a residential installation. This equipment generates, uses and can radiate radio frequency energy and, if not installed and used in accordance with the instructions, may cause harmful interference to radio communications. However, there is no guarantee that interference will not occur in a particular installation.If this equipment does cause harmful interference to radio or television re-ception,which can be determined by turning the equipment off and on, the user is encouraged to try to correct the interference by one or more of the following measures:

——Reorient or relocate the receiving antenna.

——Increase the separation between the equipment and receiver.

——Connect the equipment into an outlet on a circuit differentfrom that to which the receiver is con-nected.

——Consult the dealer or an experienced radio/TV technician for help.

To maintain compliance with FCC' s RF Exposure guidelines, This equipment should be installed and operated with minimum distance between 20cm the radiator your body: Use only the supplied antenna.

FCC ID:2AONN-AL1SYLE1E