承认书项目表

NO.	内 容 （Contents）	页数 （Number ofPage ）	页码 （Page Code）
1	承认书封面 （SpecCover）	1	1
2	承认书项目表（SpecItem ）	1	2
3	工程成品图 （Drawing）	1	3
4	电性测试报告（TestReports ）	1	4
5	S 参数测试（ SParameter ）	1	5
6	增益测试 （GainTest ）	1	6
7			
8			
9			
10	-	-	-
11	-	-	-
12	-	-	-

东莞市脉讯电子有限公司
Dongguan Maixun Electronics Co., Ltd.
Tel:0769-33691210Fax:0769-82381572
Address: Room 405, 4th Floor, No. 6 Qilin East Road, Daning Community, Humen Town, Dongguan City

电性测试报告
TestReports

ElectricalProperties	
Frequency	2.4-2.5GHz
Impedance	500hmNominal
V.S.W.R	<=2.0Max
ReturnLoss	-10dBMax
Radiation	Omni-directional
Gain(Peak)	3.7dBi
CableLoss	3.2dB/mMax@2450MHz
Polarization	Linear,Vertical
AdmittedPower	1W
Connector	ipex4
PhysicalProperties	
AntennaMaterial	CU
CableType	O.D.1.13mm//150mm
OperatingTemp.	-10~+60˚C
StorageTemp.	-10~+70˚C
CableColor	Black

东莞市脉讯电子有限公司
Dongguan Maixun Electronics Co., Ltd.

Tel:0769-33691210Fax:0769-82381572
Address: Room 405, 4th Floor, No. 6
Qilin East Road, Daning Community,
Humen Town, Dongguan City

SIGN	DATE	DESCRIPTION	APPROVER
B			
C			
D			

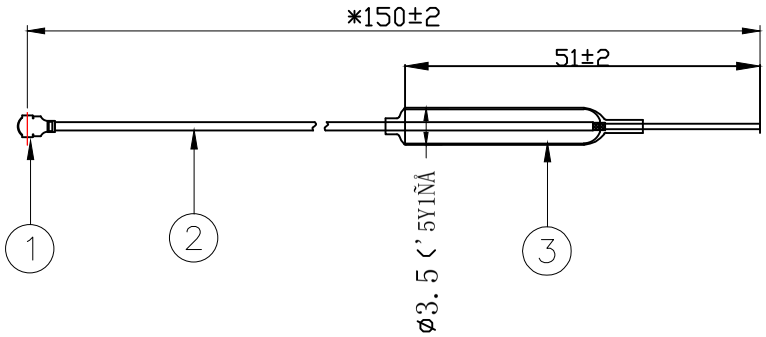

No.	Part Number	Name	Material	Q'ty
3	NB080	CU	3.5*24.5mm	1
2	R-CB-113B	Coaxial Cable	SHOWA-O.D. 1.13mm Black	1
1	CI-113	Connector	Mini Connector	1

扜嬥笏麟　鰲

Tel:86-0769-33691210
Fax:86-0769-82381572

TITLE: 2.4GHz Antenna

PART NO.: NB080-13B-IX150

DWG NAME: NB080-13B-IX150.DWG

APPROVED BY	CHECKED BY	DESIDNED BY		Tolerance
jeff 2014-02-26	leon 2014-02-26	YD 2014-02-26	UNITS: mm SCALE: 1/1 REVISION: A	

S 参数测试
SParameterTest

AgilentE5071C	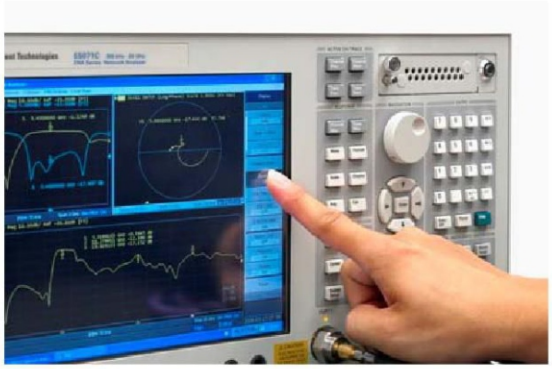

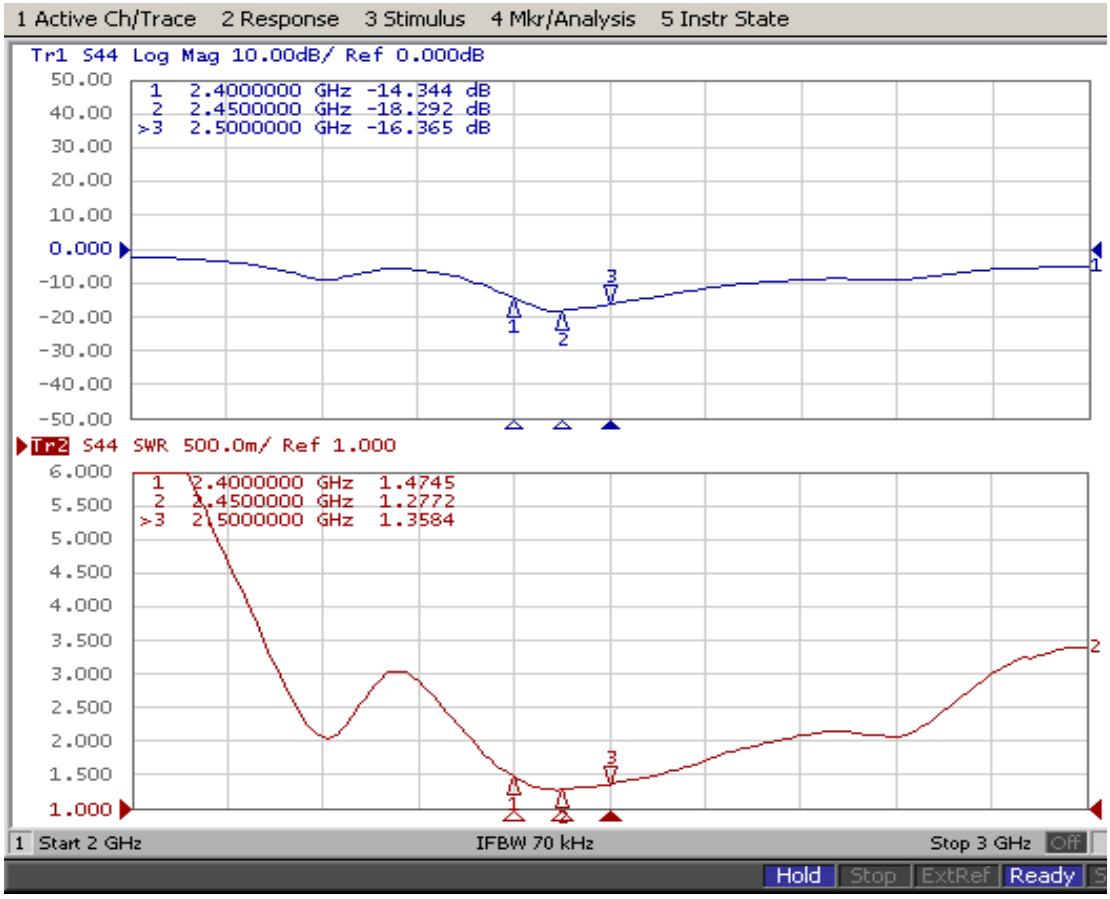

东莞市脉讯电子有限公司

Dongguan Maixun Electronics Co., Ltd.

Tel:0769-33691210Fax:0769-82381572

Address: Room 405, 4th Floor, No. 6 Qilin East Road, Daning Community, Humen Town, Dongguan City

增益测试
GainTest

Antenna Radiation Pattern VS Gain

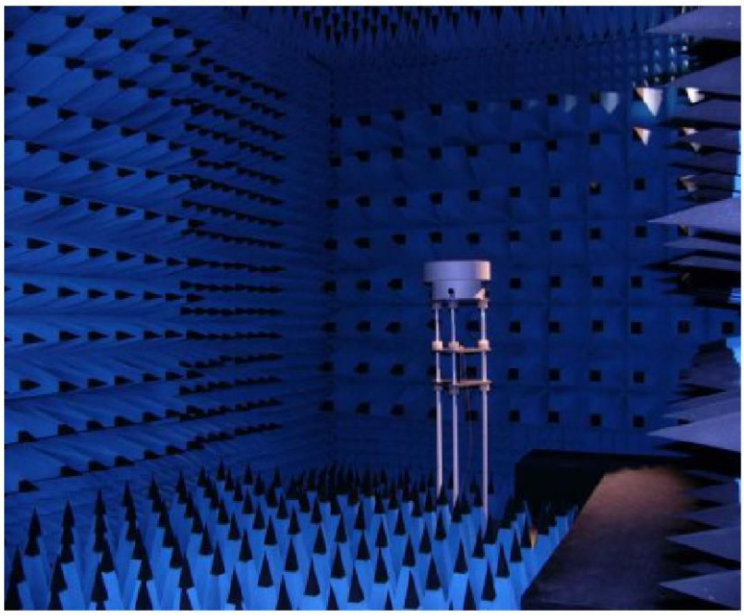

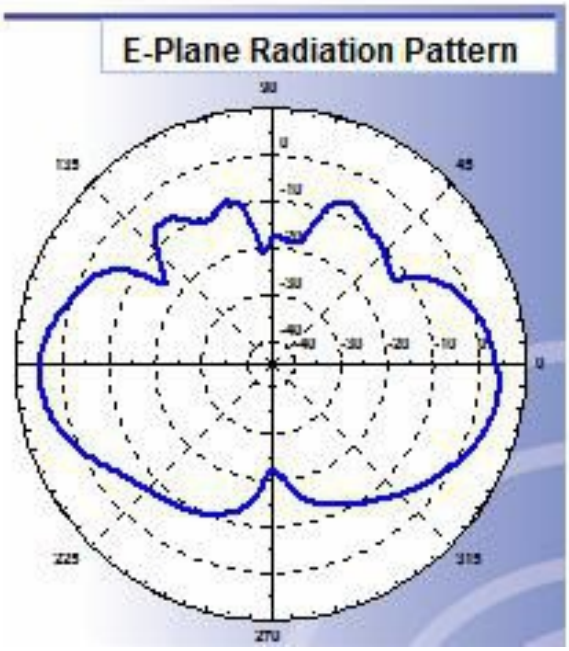

东莞市脉讯电子有限公司
Dongguan Maixun Electronics Co., Ltd.

Tel:0769-33691210Fax:0769-82381572
Address: Room 405, 4th Floor, No. 6 Qilin East Road, Daning Community, Humen Town, Dongguan City