图号：3DK0021440000N
名称：新夸父双色温200B、200B Pro说明书-英
尺寸：105x140mm 20P
材质：单色印刷 128g双铜
时间：2024.5.29

SUNCRAFTER

S200B Pro/CS200B Pro
S200B/CS200B
LED Light User Manual

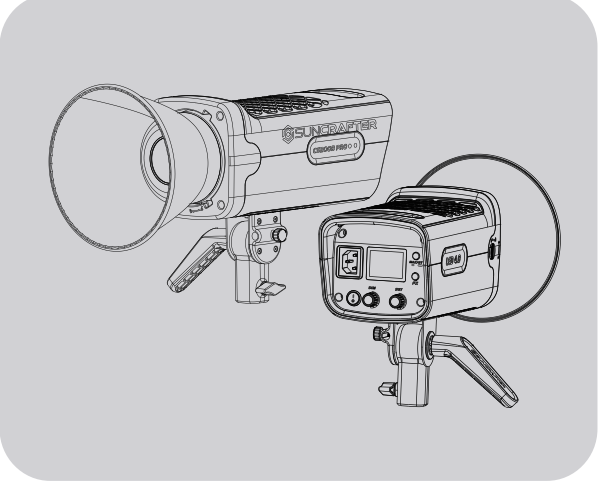

Thank you for choosing SunCrafter. This manual contains important user information for the S200B Pro/CS200B Pro/S200B/CS200B LED Light. We recommend reading it carefully before using the equipment and keeping it in a safe place for future reference.

The S200B Pro/CS200B Pro/S200B/CS200B is a convenient and versatile LED light with bi-color temperature capabilities. It is suitable for video and photography production, offering adjustable brightness ranging from 2700K to 6500K. Additionally, it includes a One-key MAX overclocking mode and ten different special effects. The light can be controlled through a mobile device app, allowing for various settings and presets. This compact and flexible lighting solution is ideal for both studio and location recording purposes.

Contents

■ Features - 1
■ Component Description - 2
■ Power Management - 3
■ Operating Description - 4
■ Mode Selection - 5-6
■ Bluetooth Connectivity - 7
■ APP Introduction - 8
■ Accessory Installation - 9
■ How to Use - 10
■ Product Specifications - 11-12
■ List of items - 13
■ Notes - 14
■ Maintenance - 15

Features

- The S200B Pro/CS200B Pro/S200B /CS200B light has fully adjustable angles, provides simple onboard controls as well as App control and can be used hand held or on a stand or with any other suitable support equipment.
- The S200B Pro/CS200B Pro offers a sunlight spectrum using an innovative diamond array light source, enabling enhanced brightness levels. It achieves an RA of 97, ensuring exceptional color fidelity, realistic and vibrant colors, with IES TM30-18 indices of Rf 96 and Rg 100.
- The S200B/CS200B offers a premium-grade light source, boasting an RA of 96 for exceptional color fidelity, lifelike and vibrant colors, complemented by high IES TM30-18 indices of Rf 95 and Rg 100.
- The colour temperature dynamic adjustable range is 2700K-6500K.
- The one-button MAX overclocking mode caters to the requirements of providing supplementary lighting for shooting in extensive spaces and large scenes with low light conditions.
- The S200B Pro/CS200B Pro/S200B/CS200B offers 10 different special lighting effects designed to suit various scenarios.
- There are 4 types of dimming curves to choose from.
- Connecting to the App via Bluetooth will provide further functions such as preset, multi-lamp control and music mode.
- Preset and sequence dimming are entirely customizable and can be set according to user preferences.
- The light comes with a Standard Bowens mount, allowing it to be used with other light attachments that also accommodate a Standard Bowens mount.
- To ensure the lights reach their full potential life, they are equipped with an automatic heat protection function. This feature helps to protect the lights from overheating and extend their lifespan.

Precautions:

1. Keep dry. Do not expose the product to water, liquids, rain or moisture either whilst in use or when in storage. It is recommended that the product should not be handled using wet hands.
2. Do not disassemble or modify the product. Mishandling, including dropping the product, may result in permanent damage.
3. Please keep this product out of the reach of children and animals.
4. Do not use or store the light in the vicinity of harmful chemicals or combustible materials. Always read the warning labels prior to using the product.
5. Please use appropriate adapters for power supply and temperature specifications and range.
6. The effectiveness of the lamp will be impaired if the heat sink is blocked or covered.

Component Description

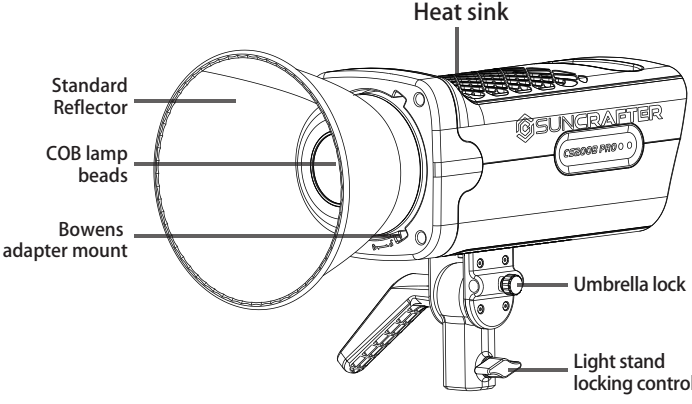

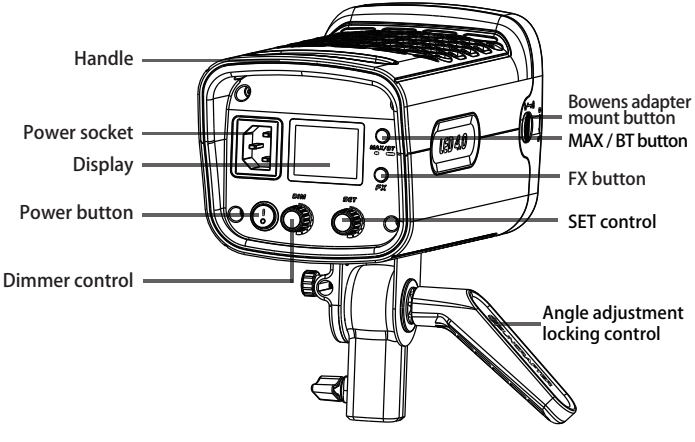

Power Management

■Power supply

Ac power supply: S200B Pro Input AC 100V-240V~50/60Hz
CS200B Pro Input AC 200V-240V~50/60Hz
S200B Input AC 100V-240V~50/60Hz
CS200B Input AC 200V-240V~50/60Hz

** Please check the corresponding voltage range before use.*
**To remove the power cable, please press the spring loaded cable release button and carefully pull out of housing. Do not force.*

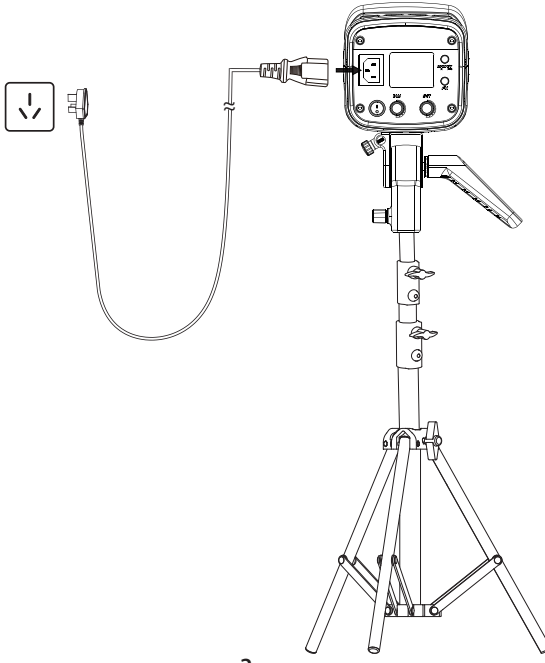

Operating Description

■Controls Description

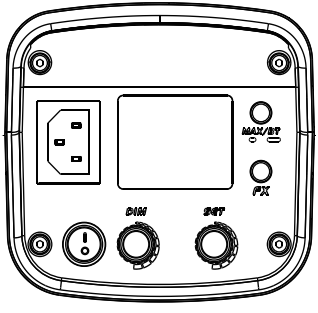

Power Button:

Up/Down toggle: On/Off

MAX / BT button:

Tap: Turn on/off Max mode.

Long press: Press and hold over 3 seconds to reset Bluetooth.

FX button:

Tap：special effects
(In lighting effect mode, press the FX control will switch to colour temperature adjustment.)

Dimmer control：

Rotate to adjust brightness.

Press repeatedly to use preset brightness: 20%, 40%, 60%,80% and 100%.

SET Control：

Rotate to adjust the colour temperature value / switch different special effects.

Tap for built-in color temperature selection.

■Screen Description

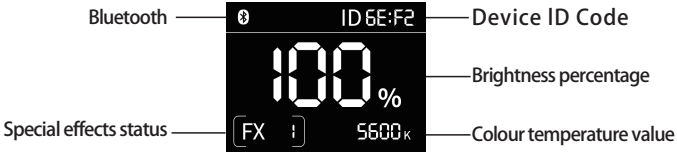

Mode Selection

■Colour Temperature Mode

Adjust color temp (2700K-6500K) and brightness (0%-100%). Press FX, move cursor to color temp box, and rotate/tap SET key to quickly adjust.

DIM Rotate the dimmer control to adjust brightness.

DIM Press the DIM control and click the brightness adjustment control to quickly switch between brightness levels:0%→20%→40%→60%→80%→100%.

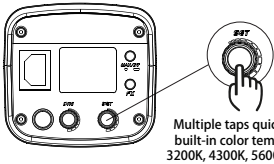

Multiple taps quickly select built-in color temp (2700K, 3200K, 4300K, 5600K, 6500K).

Brightness percentage

Colour temperature value

■Special Effect Mode

The 10 special effects are as follows:

1: fireworks; 2: lightening; 3: paparazzi; 4: TV; 5: welding light; 6: strobe light; 7: explosion; 8: pulsing light; 9: faulty bulb; 10: CCT Cycle

Adjust corresponding parameters for the effect used. Press FX, move cursor to effect box, and rotate SET to select effect.

Special effects status

Mode Selection

■MAX Mode

To engage MAX mode, simply press the MAX/BT button. When operating in this mode, power output reaches its peak, which varies from 200W to 310W when the color temperature falls within the range of 3700K to 5000K. Nevertheless, if the color temperature falls outside this range, it will revert to the standard 200W output.
For quick adjustment of brightness or color temperature in MAX mode, press the DIM/SET key. To make finer adjustments, rotate the DIM/SET key.
It's essential to set the appropriate brightness or color temperature value based on your specific usage scenarios and requirements.

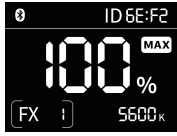

MAX Mode

Brightness percentage

Colour temperature value

■Temporary Lamp Shutoff

Press the power button to turn the light off, and press it again to turn the light on. Temporary light shutoff activates a low-power mode. When the product is not in use, ensure it is fully shut down.

APP Interface

Temporary Lamp Shutoff Switch Button

Bluetooth Connection

■ Bluetooth Connection and Reset

1. To set up the Bluetooth connection, download the Lumin+ App to your mobile device (smartphone or tablet) and register. Then, open the Lumin+ App and create a new project. Once in the project, search for available devices and select the appropriate device using its name or code to establish the Bluetooth connection. A successful connection will be indicated by the light blinking three times. From the project device list, you can choose to control a single device or multiple devices. The Bluetooth icon will appear on the status bar, allowing you to adjust the internal lighting values. If the APP displays a Bluetooth connection failure, make sure your mobile device has Bluetooth enabled or reset Bluetooth on the product and try to reconnect.
2. Bluetooth Reset: To reset the Bluetooth, perform a long press on the MAX/BT button. During the reset process, the Bluetooth icon will flash, and the screen will display "BT reset." Once the Bluetooth connection is successful, only the Bluetooth icon will be displayed.

Icon display on bluetooth reset

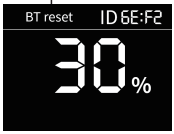

The icon is displayed after the Bluetooth connection is successful

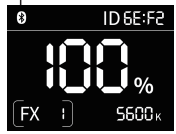

Note:

1. Please reset the Bluetooth on the device first, otherwise the device will not be found.
2. The S200B Pro/CS200B Pro/S200B/CS200B connects to your mobile device using Bluetooth BLE5.1 technology. Ensure Bluetooth is enabled on your device before opening the App. Android users should also enable Bluetooth within the App.
3. The Lumin+ App currently supports iOS 12.0 and above. It also supports mobile devices with Android 8.0 and above.
4. After connecting the device to the Lumin+ App via Bluetooth, ensure that all devices have sufficient battery power to support the duration of the firmware update if prompted to do so.

APP Introduction

■App Overview

The Lumin+ App has multi-light control, Preset and music mode. For additional modes please download the Lumin+ App or visit www.suncrafter.com to access a detailed App user guide. To download the APP, please scan the QR code or search for Lumin+ App. For more information please visit www.suncrafter.com after registering you can operate the product using the APP, however should you change to another mobile device, the product will be reset via Bluetooth, after which you can use the APP connection.

Lumin+
App QR Code

App Store

android

Google play

■ Preset and sequences

Within the Lumin+ App you can select the preset settings within modes.You can apply preset to layout, loop method, fade time, duration etc to achieve a repeatable lighting status or set of lighting conditions.

■ Multi-light Control

Within the App's project device list, you can choose to add multiple lights to a project. By setting preset on each light you can create a multiple light sequence.

■ Music mode

Music mode has a variety of ambient colours that react and change according to the music.

■ Special Effects

The Lumin+ App has 10 internal effects, and more parameters can be set in the APP according to your lighting needs.

Accessory Installation

The S200B Pro/CS200B Pro/S200B/CS200B LED light comes with its own Standard Bowens mount and can be used with other light accessories which accommodate a Standard Bowens adapter such as Fresnel attachment, softbox or beauty dish etc.

■Reflector Installation

To attach the reflector, align the three tabs with the lamp head and then rotate them to lock it in place.

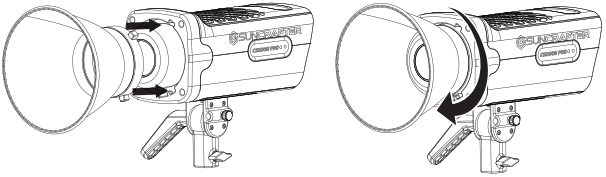

■Reflector Removal

To remove the reflector, push the reflector release button on the lamp head and then rotate the reflector anti-clockwise.

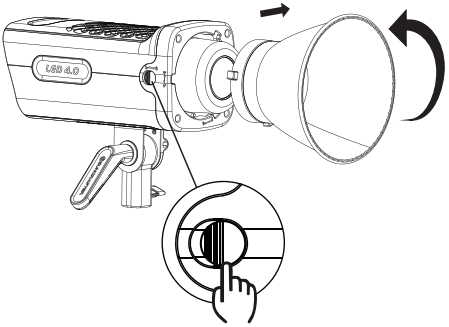

How to Use

■Adjustable Spotlight Angle

The angle of the light can be easily adjusted by turning the angle handle anti-clockwise. To lock it back in place, turn it clockwise.

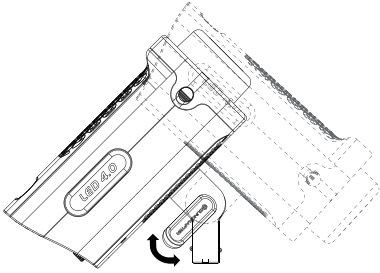

■Usage

The S200B Pro/CS200B Pro/S200B/CS200B can be attached to a light stand or other suitable support accessory.

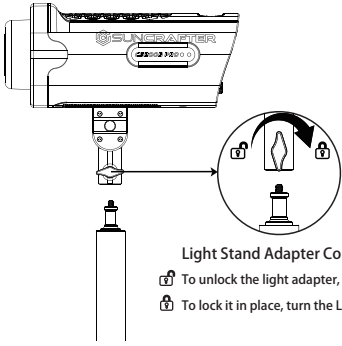

Light Stand Adapter Control

To unlock the light adapter, turn the Light Adapter Lock counterclockwise

To lock it in place, turn the Light Adapter Lock clockwise

Product Specifications

Product Name	LED Light
Model	S200B Pro/CS200B Pro
Power supply specification	S200B Pro Intput AC 100V-240V~50/60Hz CS200B Pro Intput AC 200V-240V~50/60Hz
Overall Power	335W
Light Output Power	310W
Materials	Aluminium alloy, PC
Bare Light Size	295 X 179 X228 mm
Bare Light Net Weight	S200B Pro：2.25kg CS200B Pro：1.96kg
Working Temperature	-15℃~40℃
SSI CIE-D55 *	84
SSI CIE-D27 *	91
IES TM-30 *	Rf 96 Rg100
CQS *	96
CRI *	97
TLCI *	99
Colour Temperature*	2700K-6500K
Brightness Range	0%~100%
100% Illuminance (LUX)* (Distance 1 meter)	2700K Main lamp≈5600 with reflector≈26000 3200K Main lamp≈6800 with reflector≈33000 MAX Mode Bare Lamp≈7000 4300K Main lamp≈7500 with reflector≈36600 MAX Mode Bare Lamp≈10000 5600K Main lamp≈8000 with reflector≈39000 MAX Mode Bare Lamp≈9300 6500K Main lamp≈7600 with reflector≈38000
Control Method	Bluetooth APP control, manual button control
Wireless Frequency	2.4GHz
Bluetooth Transmission Distance	15M(no interference)
Display Type	Monochrome OLED

*Note: The above data is based on SunCrafter Lab tests and there may be some variation in values with data marked with an asterick *

Product Specifications

Product Name	LED Light
Model	S200B/CS200B
Power supply specification	S200B Intput AC 100V-240V~50/60Hz CS200B Intput AC 200V-240V~50/60Hz
Overall Power	335W
Light Output Power	310W
Materials	Aluminium alloy, PC
Bare Light Size	295 X 179 X228 mm
Bare Light Net Weight	S200B：2.25kg　CS200B：1.96kg
Working Temperature	-15℃~40℃
SSI CIE-D55 *	74
SSI CIE-D27 *	90
IES TM-30 *	Rf 95 Rg100
CQS *	96
CRI *	96
TLCI *	99
Colour Temperature*	2700K-6500K
Brightness Range	0%~100%
100% Illuminance (LUX)* (Distance 1 meter)	2700K Main lamp≈6000 with reflector≈27000 3200K Main lamp≈8000 with reflector≈36000 MAX Mode Bare Lamp≈8800 4300K Main lamp≈8900 with reflector≈42000 MAX Mode Bare Lamp≈12000 5600K Main lamp≈9600 with reflector≈46000 MAX Mode Bare Lamp≈11000 6500K Main lamp≈9300 with reflector≈43000
Control Method	Bluetooth APP control, manual button control
Wireless Frequency	2.4GHz
Bluetooth Transmission Distance	15M(no interference)
Display Type	Monochrome OLED

*Note: The above data is based on SunCrafter Lab tests and there may be some variation in values with data marked with an asterick *

List of items

■ S200B Pro

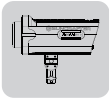
Main Light Body

Reflector

5m Power Cable

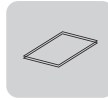
Warranty Card

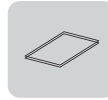
User Manual

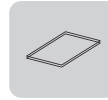
Certificate

■ CS200B Pro

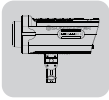
Main Light Body

5m Power Cable

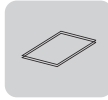
Warranty Card

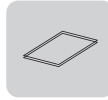
User Manual

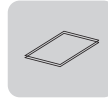
Certificate

■ S200B

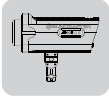
Main Light Body

Reflector

3m Power Cable

Warranty Card

User Manual

Certificate

■ CS200B

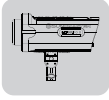
Main Light Body

3m Power Cable

Warranty Card

User Manual

Certificate

Notes

1. In order to avoid equipment failure, please do not expose this product to moisture or use in wet or rainy, sandy or dusty environments.
2. Do not disassemble or modify the product. Mishandling, including dropping the product, may result in permanent damage.
3. Keep this product and its parts out of the reach of children and animals.
4. Please ensure that the product is always free from moisture and is stored safely. Water and other liquids may contain minerals that can corrode the internal electronic circuits.
5. Avoid using or placing the product in high temperature environments, including direct strong, sunlight, as this may shorten the life of electronic parts, damage the battery or distort plastic parts or casings.
6. Avoid using the product in very low temperature environments as internal condensation or water particles may damage electronic circuitry as the temperature rises.
7. Avoid using or storing the product in dirty or dusty environments as this may damage components.
8. Avoid placing the product on or near hot surfaces or sources of heat such as lit cigarettes, naked flames or heating systems.
9. Do not disassemble the product by yourself. Inappropriate or unprofessional treatment may result in damage to the product.
10. Do not drop, knock or shake the product. Rough handling may damage the internal circuit board.
11. During use do not cover the light head with flammable materials.
12. To avoid burns, please do not handle the light if it is hot.

Maintenance

1. To prevent the accumulation of dust particles affecting the performance of the product, please carefully wipe the exterior of the product with a clean, soft, dry cloth at regular intervals.
2. The S200B Pro/CS200B Pro/S200B/CS200B is covered by a 3-year warranty from the date of original purchase.
3. Product damage or failure to operate caused by inappropriate or irregular operation is not covered by the warranty.
4. Unauthorized repair or attempting repair will make the warranty void and any authorised repair will then be subject to charges.
5. If the product fails to function or is subjected to water or moisture please ensure it is professionally examined and repaired prior to using it.
6. Always use a clean, dry soft cloth to clean the lens on the product. Do not use harmful chemicals, cleaning agents or liquids to clean the product.
7. In the unlikely event that the product is found to be faulty please contact our Customer Service team who will be happy to assist you: cs@suncrafter.com

FCC Statement

This device complies with Part 15 of the FCC rules. Operation is subject to the following two conditions: 1) this device may not cause harmful interference, and 2) this device must accept any interference received, including interference that may cause undesired operation.
Note: This equipment has been tested and found to comply with the limits for a Class B digital device, pursuant to part 15 of the FCC Rules. These limits are designed to provide reasonable protection against harmful interference in a residential installation.
This equipment generates uses and can radiate radio frequency energy and, if not installed and used in accordance with the instructions, may cause harmful interference to radio communications. However, there is no guarantee that interference will not occur in particular installation. If this equipment does cause harmful interference to radio or television reception, which can be determined by turning the equipment off and on, the user is encouraged to try to correct the interferenceby one or more of the following measures:
--Reorient or relocate the receiving antenna.
--Increase the separation between the equipment and receiver.
--Connect the equipment into an outlet on a circuit different from that to which the receiver is connected.
--Consult the dealer or an experienced radio/TV technician for help.
Changes or modifications not expressly approved by the party responsible for compliance could void the user's authority to operate the equipment.
Radiation Exposure Statement
This device complies with FCC RF radiation exposure limits set forth for an uncontrolled environment.

The FCC certification of this device refers to RF exposure testing performed in typical operating conditions, where a person is no closer than 20 centimeters from the device surface at all times, except for non-repetitive patterns with transient time intervals in the order of a second. Only in the stated conditions , the device is shown to fully comply with the FCC RF Exposure requirements of KDB 447498.

Statement

SunCrafter reserves the right to modify or correct all hardware and software specifications without prior notice. In the event of any discrepancy between the instruction manual and the actual product, please refer to the product itself. SunCrafter and its affiliates shall not be held liable for any direct, indirect, punitive, incidental, special, consequential, or property damage, or any harm to life resulting from the use or misuse of any SunCrafter product. The user assumes all risks associated with using this product, and this disclaimer does not affect your legal rights.

Lumin+
APP QR Code

To download the Lumin+ App, please scan the QR code or visit our website. For more information on operation modes please visit our website www.suncrafter.com

Manufacturer's Information

SUNCRAFTER

9meanders Inc

USA Design & Made in China

Origin: China

Website: www.suncrafter.com

FR + Matière éponge + Sacs en plastique BAC DE TRI