SUNCRAFTER

TL30 Tube Light
User Manual

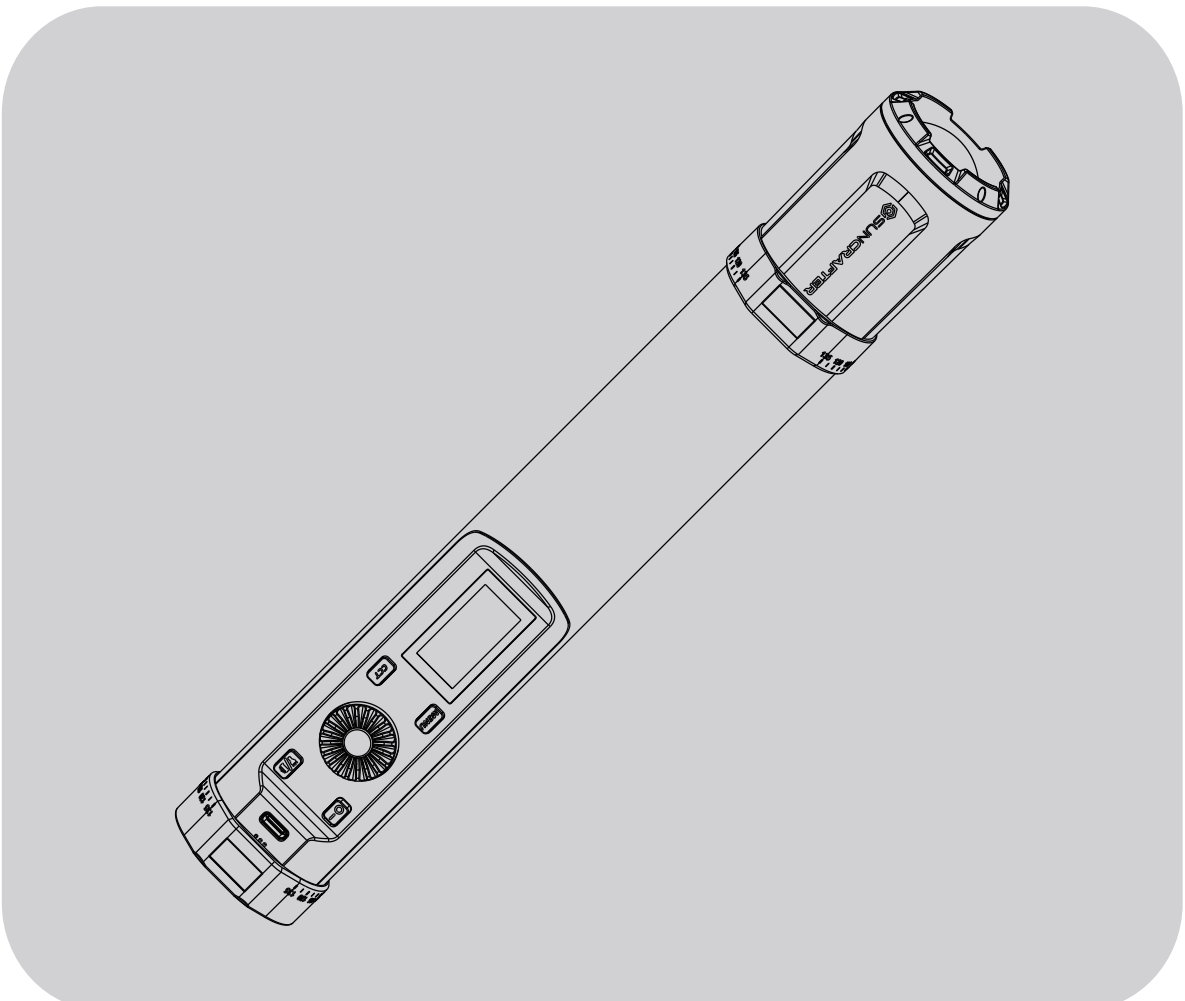

Thank you for choosing SunCrafter. This manual contains important user information for the TL30 Tube Light. We recommend reading it carefully before using the equipment and keeping it in a safe place for future reference.

TL30 Tube Light: Advanced RGBWW mixing technology for versatile colors. Revolutionary design seamlessly integrates point and surface light sources. Reshape your imagination of light with 360° hue color adjustment, brightness adjustment, HSI, and special effects. Connect via the app for presets and customization. Its portable magnetic design ensures convenience everywhere you go. Unleash your creative light show with ease. Suitable for both studio and location video and photography recording.

Contents

■ Features - - — — — — — — — — — — — — — — — — — - 1
■ Component Description - — — — — — — — — — — — - 2
■ Operation Description - — — — — — — — — — — — - 3
■ Power Management - — — — — — — — — — — — — — - 4
■ Features Introduction - — — — — — — — — — — — — - 5-9
■ Mode Selection - — — — — — — — — — — — — — — - 10-11
■ Function Setting - — — — — — — — — — — — — — — - 12-13
■ Bluetooth Connection - — — — — — — — — — — — — - 14
■ APP Introduction - — — — — — — — — — — — — — — - 15
■ List of Items - — — — — — — — — — — — — — — — - 16
■ Product Specifications - — — — — — — — — — — — - 17
■ Illuminance Test Data - — — — — — — — — — — — — - 18
■ Notes - — — — — — — — — — — — — — — — — — — — - 19
■ Maintenance - — — — — — — — — — — — — — — — - 20
■ FCC Warning - — — — — — — — — — — — — — — — - 21

Features

1. Innovative patented technology with integrated point and surface light source design, allowing dual-purpose use with one-touch switching.
2. Advanced RGBWW Technology: Five-color mixing for incredibly even colors.
3. Telescopic Focusing Technology: Provides endless possibilities for light ambiance.
4. Adjustable Focus Ring: Allows flexible angle control with 45° adjustments.
5. Uniform Lighting: Milky white PC diffuser for a softer lighting effect.
6. The magnetic rear means that the light can be quickly and safely placed on any metal object.
7. Dual Type-C power supply, further extended by using a power bank and the ability to run and charge at the same time.
8. The TL30 is convenient, compact and portable - small enough to fit in your pocket.
9. The TL30 offers 20 different special lighting effects designed to suite various scenarios.
10. Colour temperature range of 2700K-10000K. CRI RA value of ⩾96 when colour temperature is between 2700K and 7500K.
11. Comes with colour temperature, HSI and special effects control and can be connected to a mobile device via the APP which provides RGBW, colour co-ordinates XY, colour paper GEL, music mode, preset, multi-lamp control and other useful modes.
12. Connecting to the App via Bluetooth will provide further functions such as preset, multi-lamp control and music mode.
13. Preset and sequence dimming are entirely customizable and can be set according to user preferences.

Precautions:

1. Do not expose to water or other liquids. This product is not dustproof or waterproof.
2. Low Power Warning: Flashing battery icon indicates the need for immediate charging.
3. For long-term storage, discharge and recharge to at least 60% to preserve battery life.
4. Use a charger with at least 18W output and follow the recommended voltage, current, and temperature limits for safe and efficient charging.
5. Charging while the device is on is slow. It is recommended to charge when the device is turned off.
6. Please ensure that you do not apply pressure to the OLED screen as this may result in permanent screen damage.
7. Do not look directly at the LED tube in use from a close distance, as it may cause damage to your eyesight.

Component Description

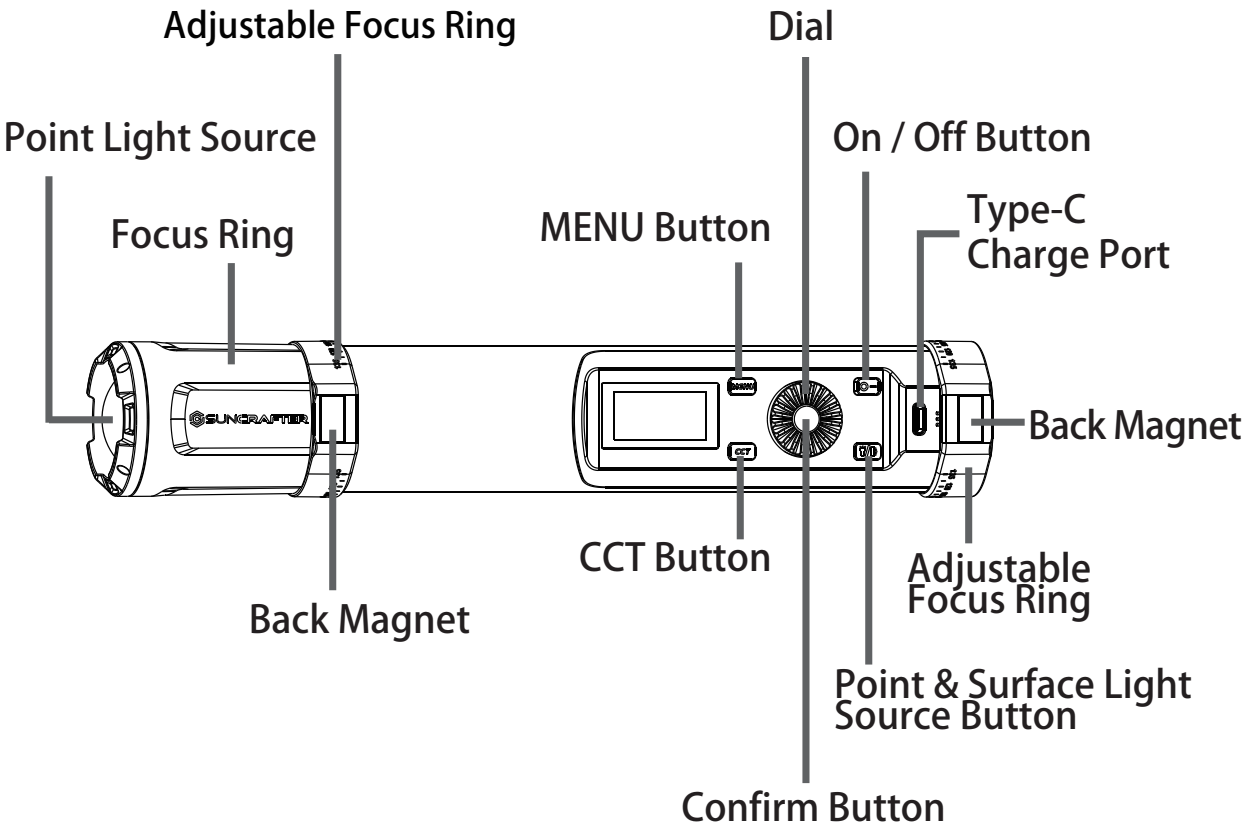

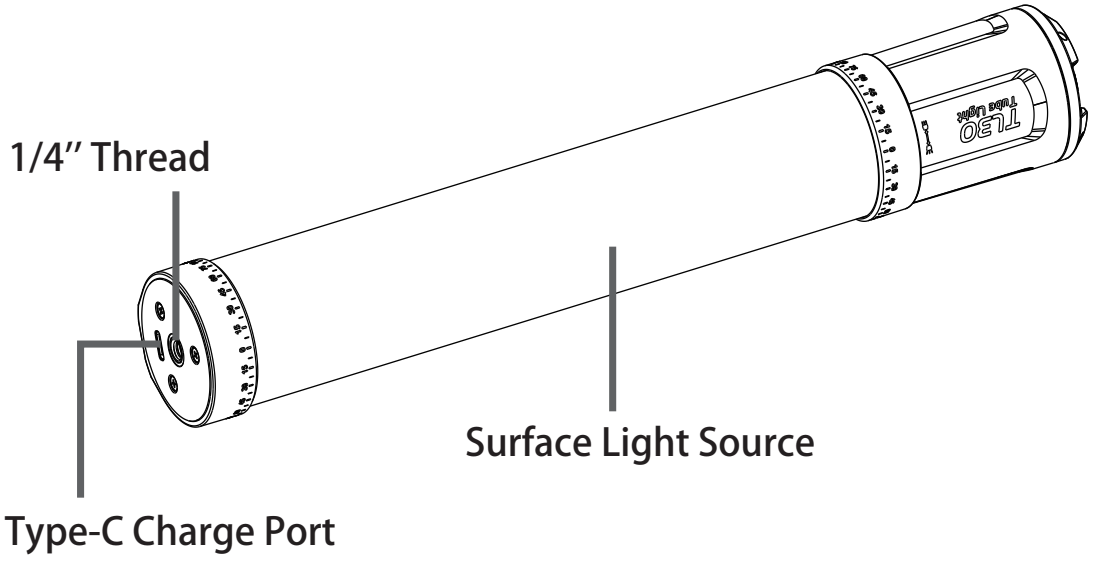

Operation Description

■Button Introduction

Rotary Dial: select up or down options / toggle different modes / adjust parameter values

MENU Button:
Press: color temp./HSI/ special effects/settings

CCT Button:
Short press: select CCT

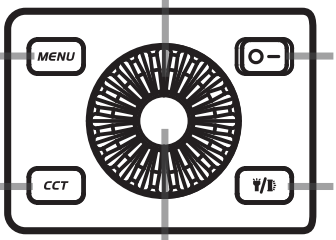

On / Off Button:
To Left: Off, To Right: ON

Point & Surface Light Source Button:
Press: switch from surface source to point source
Long press: temporarily turn the light Off/ON

Press Confirm Button once: move cursor/confirm current selection

■Menu Screen

Bluetooth connected

Device ID#

Main Interface

Battery icon
(Low Power Flashing)

Parameter interface

Power Management

■Type-C Charging

18W charger or portable power bank charging.

The TL30 has two Type-C power supply ports, allowing flexible power options. Note that the light body may become hot when used while charging, and it is not recommended to use it this way for long periods.

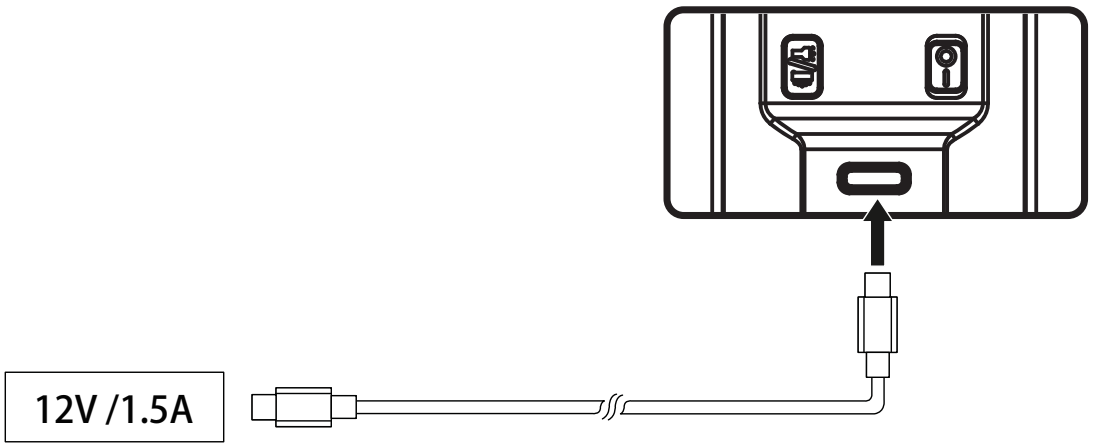

1. After the light is attached to the wall, you can charge it using the right-side Type-C port.

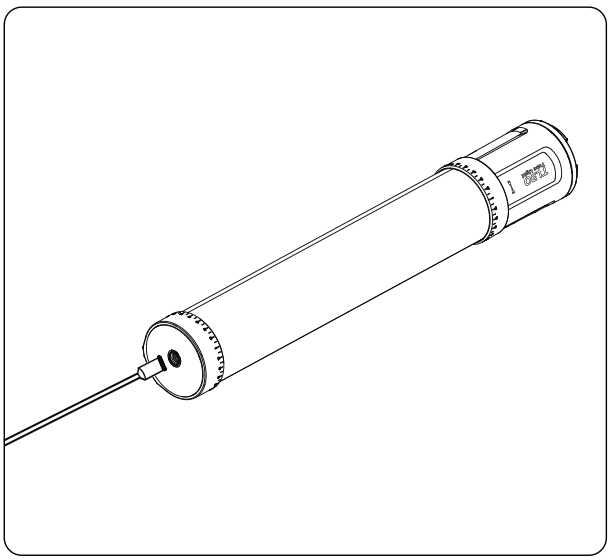

2. Use the Type-C port on the control panel for charging when the light is attached to a 1/4 ″ screw.

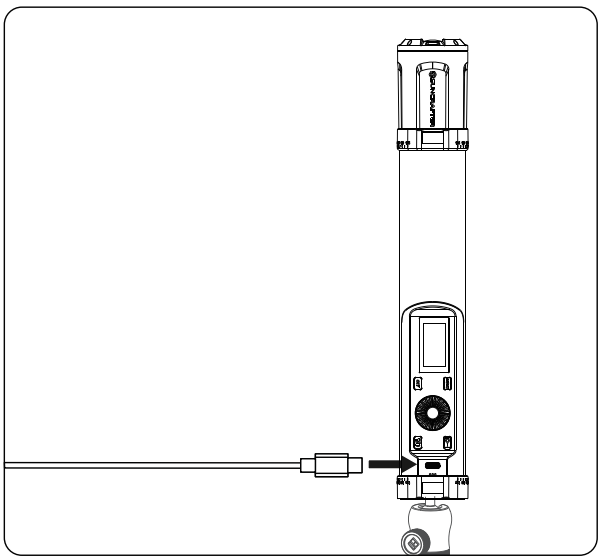

Features Introduction

■Point ⇆ Surface Light Source : One-touch Switch

Via Lumin APP or manual control can switch between point and surface light sources.

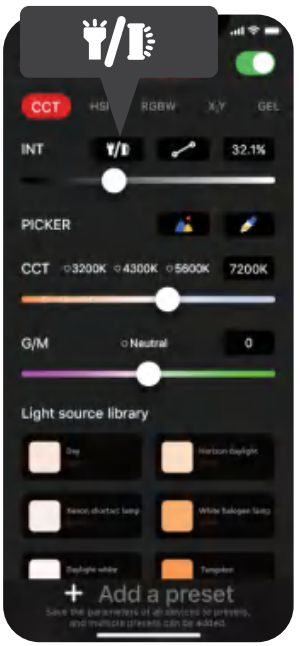

APP Control

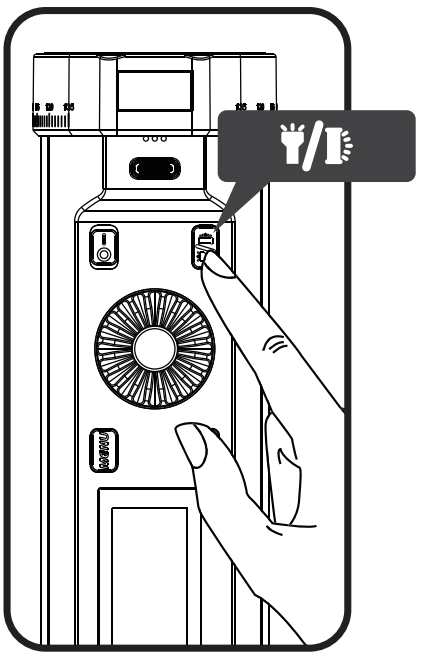

Manual Control

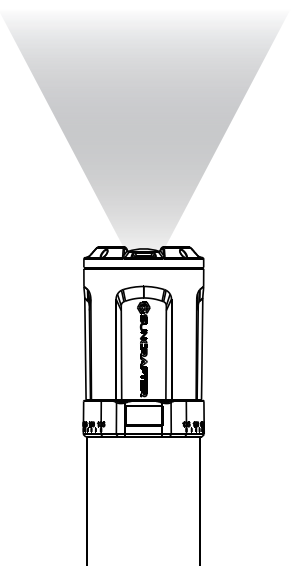

Point Light Sources

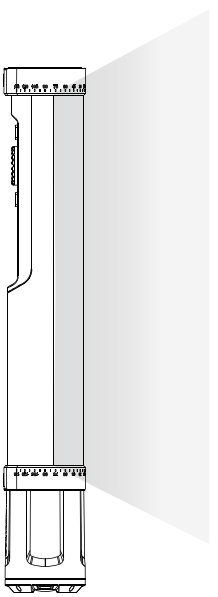

Surface Light Sources

Features Introduction

■ Adjustable Focus

Equipped with innovative telescopic focusing, it offers unlimited possibilities for light atmosphere. Simply rotate the focus ring to transition from a tightly focused bright spot to a wide, warm ambient light.

* Reminder: The metal parts inside the focus ring can become hot after prolonged use of the point light source. Please avoid touching them with your hands.

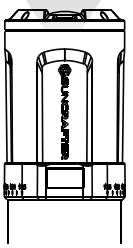

Retracted:
The light beam grows larger and colors lighten.

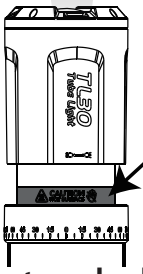

Extended:
The light beam narrows and colors become stronger.

■Tick-Tock Rotation, Control Light Effortlessly.

The magnetic rings on both ends allow for 45-degree adjustments. Once the light fixture is mounted on the wall, you can easily change the light angle to suit your needs

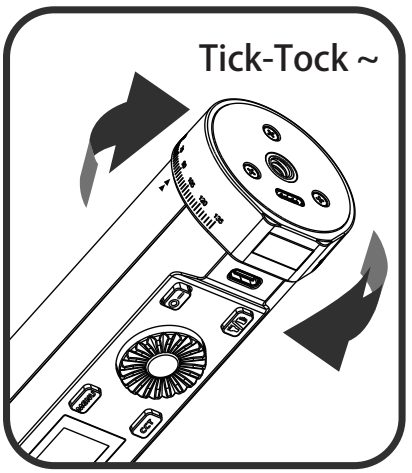

Aim the arrow at the scale for precise angle adjustment.

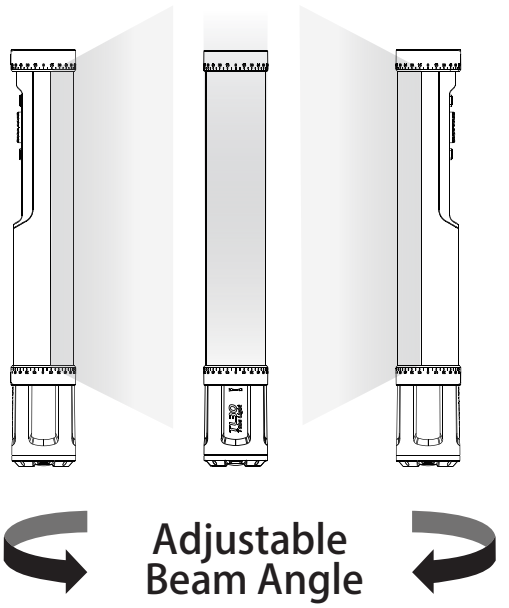

Features Introduction

■Versatile Installation, Easy to Use

Magnets have been located on the back so that the lights can be securely attached to metal objects.

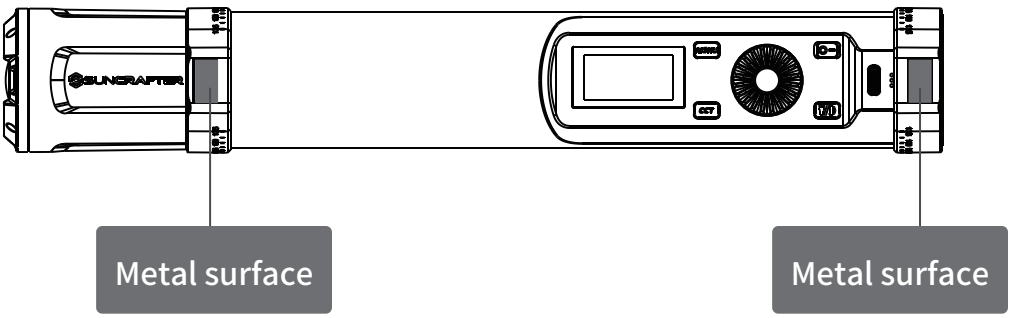

Eg: Metal shelving

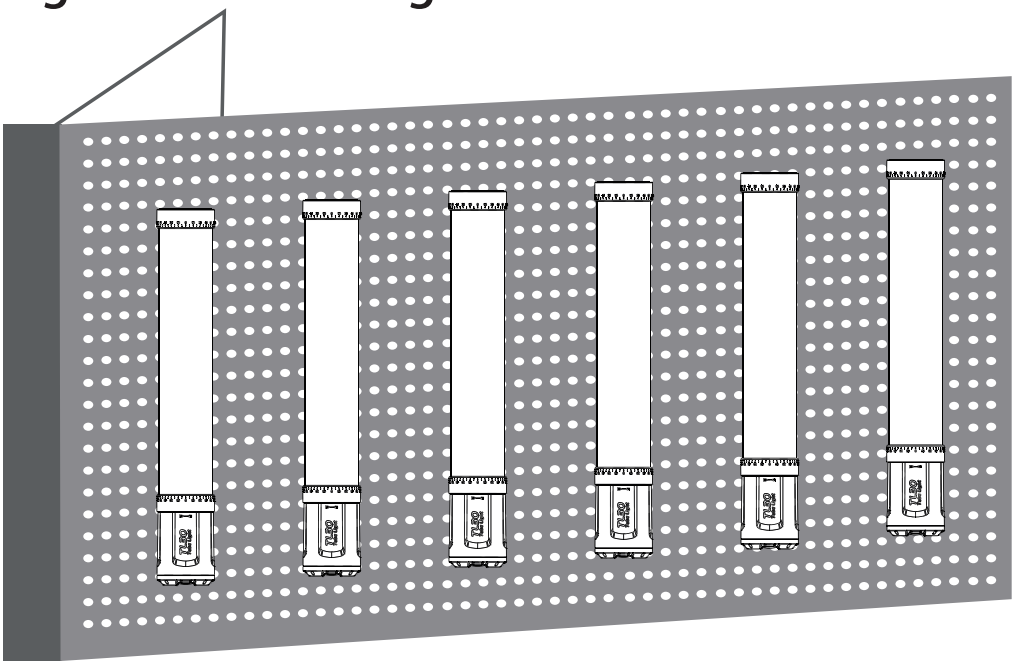

* The product contains magnets. Please keep it away from items susceptible to magnetization: floppy disks, credit cards, computer monitors, watches, mobile phones, medical devices (pacemakers), etc.
* Do not adhere the magnet to surfaces exceeding 80-degree to reduce the risk of magnetic field degradation.

Features Introduction

■ 1/4'' Thread

The base has a 1/4" thread, fitting most photography gear with 1/4" screws. It’s compatible with Lanyard, light stands, and more.

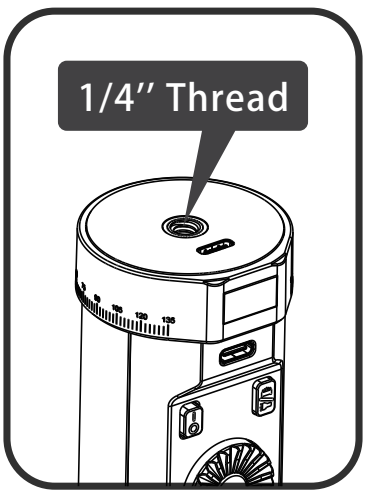

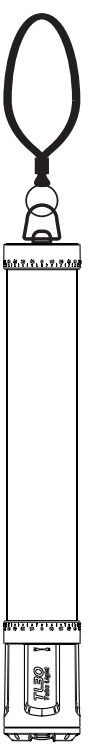

Lanyard

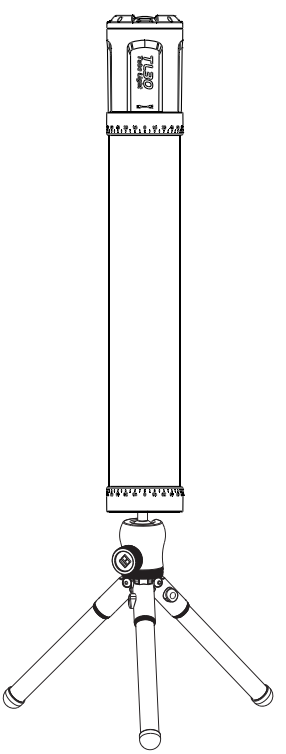

Timberpod
(Sold separately)

Features Introduction

■How to Use Pipe Clamp

The clamp has a 1/4" thread and a magnet on the bottom, making it compatible with most photography tripods that have a 1/4" screw. It can also be attached to small metal surfaces using the magnet on the clamp, making it easy to install and remove.

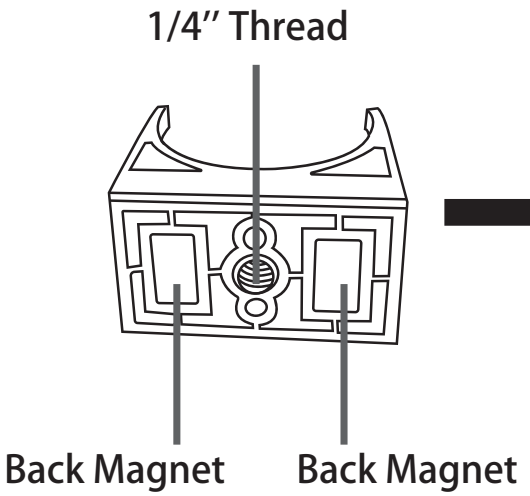

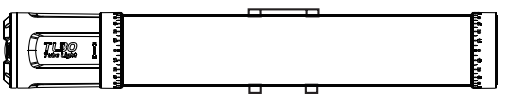

①Use the magnet on the clamp to attach the tube light to small metal surfaces.

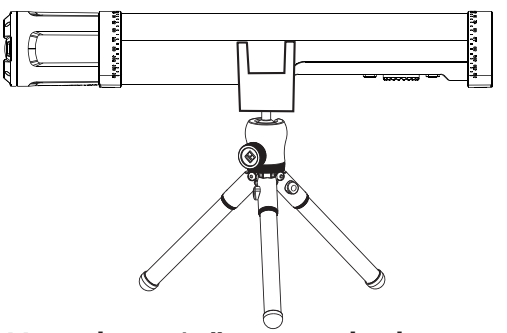

②Use the 1/4" screw hole on the clamp to horizontally mount the tube light on a timberpod.

■ Handheld shooting

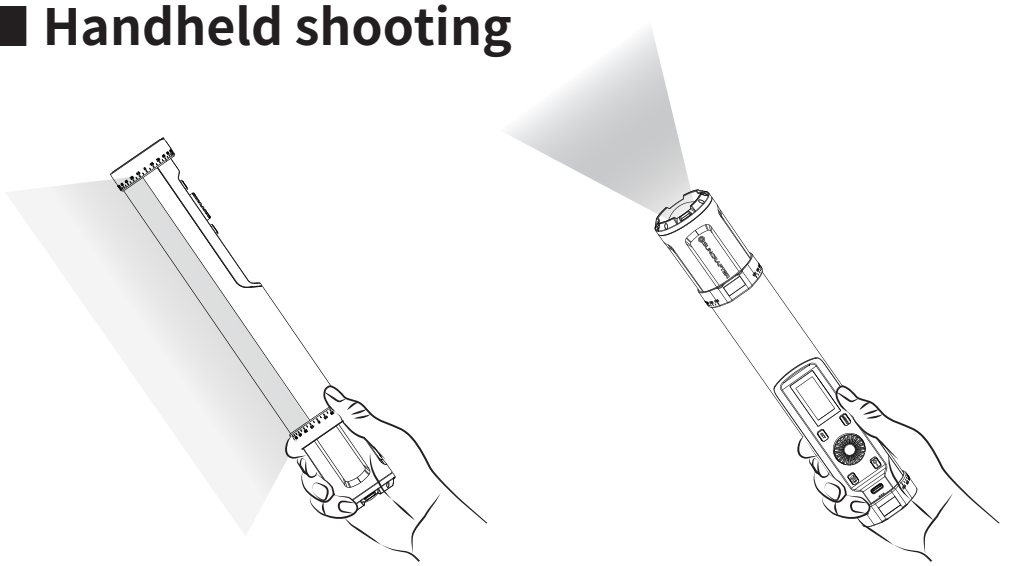

Mode Selection

■ CCT Mode

The adjustable parameters within colour temperature mode are: colour temperature range of 2700K ~ 10000K. Brightness range of 0% ~ 100% and a green/magenta range of -1 ~ +1.
Press the CCT button to use the colour temperature mode and adjust the colour temperature by rotating the Dial button.
Press the 'Confirm' button to select color temperature/brighness /green/magenta.
Adjust the corresponding parameter by rotating the Dial button.

■ HSI Mode

The adjustable parameters of the HSI mode are: HSI range 0° ~ 360°, saturation range 0% ~100% and brightness 0% ~100%.
Press the 'MENU' button, select HSI, and press the 'Confirm' button to enter HSI mode.
Press the 'Confirm' button once to choose hue/saturation/brightness, and adjust the corresponding parameter by rotating the Dial.

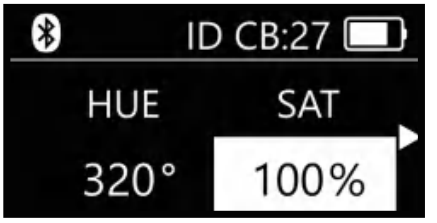

Mode Selection

■Special Effects Mode

There are 20 different special effects including, Fireworks, Flashing, CCT Cycle, SOS, Rainbow, Lightning, TV, Pulsing, Fire, Emergency vehicle, Party, Strobe light, Welding light, Broken light bulb, Candle, Clouds, Nightclub, Strobe light, Explosion and Strobe fluorescent flicker.

Press 'MENU' , select ' Special Effects' , and press ' Confirm' to enter Special Effects mode.

Brightness adjustment range is from 0% - 100%.

Rotate the Dial to select the effect, corresponding to the parameter size change.

Press the 'Confirm' button to select effect type, brightness, speed, frequency and decay, color temperature, etc.

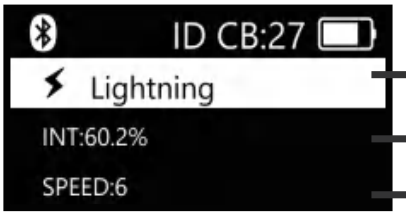

Special effects

Brightness parameters

Speed parameters

Function Setting

■ Language selection

Press 'MENU' button, selected 'Settings', press the 'Confirm' button to enter the settings mode;
Rotate the Dial so the cursor is on 'Language', then press the 'Confirm' button to switch between Chinese and English.

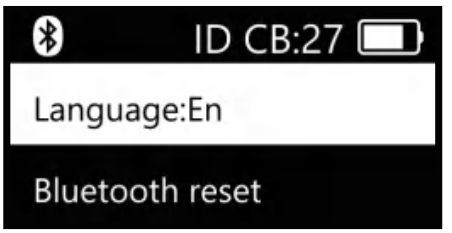

■ Restore Factory Settings

Press the 'MENU' button, select 'Settings', and press the 'Confirm' button to enter the settings mode;
Rotate the Dial to select 'Restore Factory Settings', and press the 'Confirm' button to enter factory reset;
Rotate the Dial to choose 'Yes/No'. Press 'Yes' to confirm the restoration to factory settings, or press 'No' to exit the restoration interface.
Restoring factory settings will delete user-configured data. Use this function with caution.

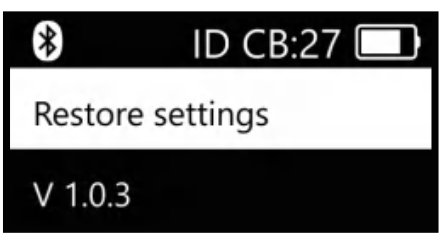

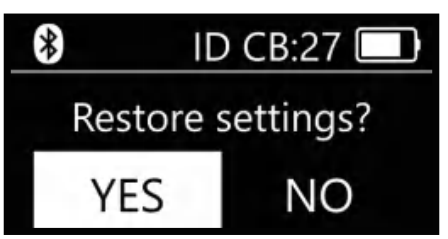

Function Setting

■ Temporary Lamp Shut-Off

Long press the Point & Surface Light Source button to turn the light off, and short press the power button again to turn the light on. Temporary light shut-off is a low-power mode. When the product is not in use, please check to make sure the product is fully shut down.

■ Device is off without battery power

In the power-off state with no battery power – the device cannot be turned on.

Note: Due to the discharge characteristics of the lithium battery and the power requirements of the TL30, please check if the battery indicator on the display is flashing when using the product. If the battery is low, the indicator will flash, indicating that you should charge it using the Type-C external power supply.

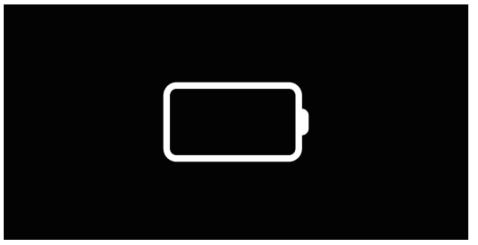

■ Slow Charging While Powered On

Slow charging while powered on - The screen will show: 'Please use Fast Charger!'

Note: When charging and using at a time, it is essential to use an 18W or above charger or a power bank for optimal performance.

Bluetooth Connection

■ Bluetooth Settings

1. To set up the Bluetooth connection, download the Lumin+ App to your mobile device (smartphone or tablet) and register. Then, open the Lumin+ App and create a new project. Once in the project, search for available devices and select the appropriate device using its name or code to establish the Bluetooth connection. A successful connection will be indicated by the light blinking three times. From the project device list, you can choose to control a single device or multiple devices. The Bluetooth icon will appear on the status bar, allowing you to adjust the internal lighting values. If the APP displays a Bluetooth connection failure, make sure your mobile device has Bluetooth enabled or reset Bluetooth on the product and try to reconnect.
2. Bluetooth reset: Press 'MENU', go to 'Settings', then 'Confirm' to enter settings. Use the Dial to select 'Bluetooth Reset' and 'Confirm'. Choose 'Yes' to reset or 'No' to exit the Bluetooth reset screen.

Note:

1. Please reset the Bluetooth on the device first, otherwise the device will not be found.
2. The TL30 and mobile device connection use Bluetooth BLE5.1 technology. Prior to opening the App to connect please ensure that Bluetooth has been enabled on your device. If using Android, you will need to enable Bluetooth on the APP also.
3. The Lumin+ App currently supports iOS 12.0 and above. It also supports mobile devices with Android 8.0 and above.
4. After connecting the device to the Lumin App via Bluetooth please ensure that, when prompted to make a firmware update, the battery power for all devices is sufficient to support the duration of the update.

APP Introduction

■Lumin App Overview

The Lumin+ App has multi-light control, Preset and music mode. For additional modes please download the Lumin+ App or visit www.suncrafter.com to access a detailed App user guide. To download the APP, please scan the QR code or search for Lumin+ App. For more information please visit www.suncrafter.com after registering you can operate the product using the APP, however should you change to another mobile device, the product will be reset via Bluetooth, after which you can use the APP connection.

Lumin+
App QR Code

App Store

android

Google play

■Preset and sequences

Within the Lumin+ APP, you can adjust the preset settings which can then be added to any sequence. By setting a flashing sequence layout, cycle mode, fade time, duration, etc. you can then switch between scenes and control and play the lighting effects wirelessly.

■Multi-light Control

Within the App's project device list, you can choose to add multiple lights to a project. By setting preset on each light you can create a multiple light sequence.

■Music mode

Music mode has a variety of ambient colours that react and change according to the music.

■Special Effects

The Lumin+ APP has 20 internal effects, and more parameters can be set in the APP according to your lighting needs.

List of Items

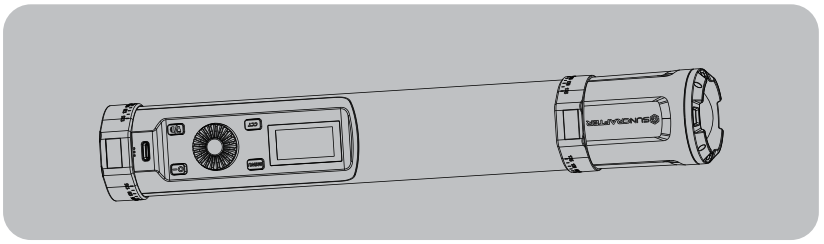

TL30 Main Light Body

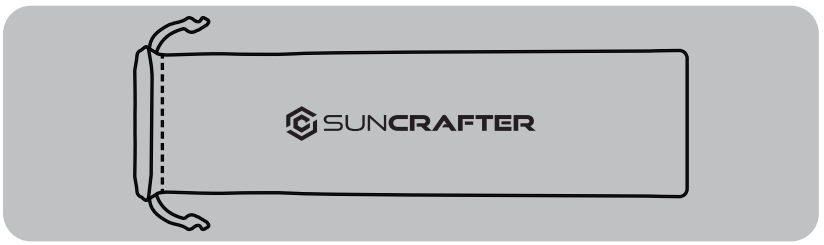

Carry Case

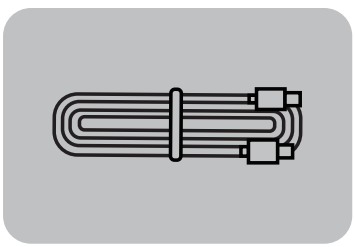

Type-C Charging Cable

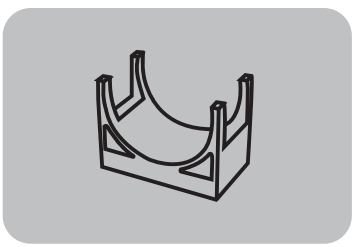

Pipe Clamp

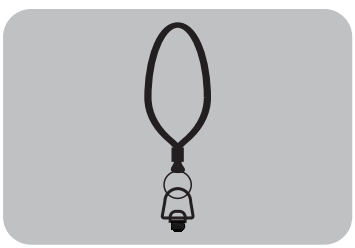

1/4″ Lanyard

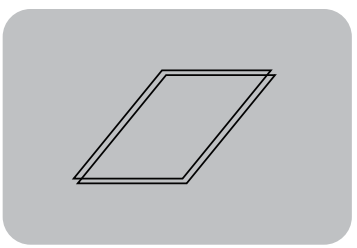

User Manual

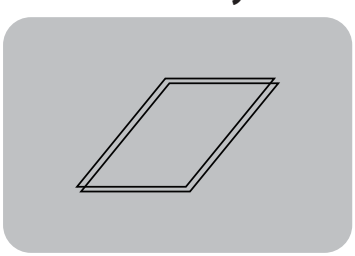

Warranty Card

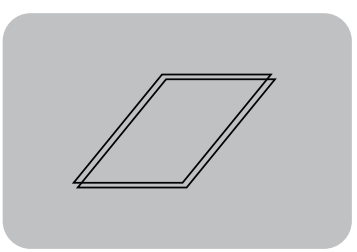

Certificate

Product Specifications

Product Name	SunCrafter TL30 Tube Light
Model	TL30
Power	10W
Charging	12V /1.5A
Battery Capacity	3.7V 5000mAh/18.2Wh
Run Time	90 minutes
Charging port	Type-C
SSI CIE-D55*	74
SSI CIE-D27*	88
IES TM-30*	Rf 95 Rg 102
CQS *	96
CRI *	96
TLCI *	99
Working Temperature	0℃~40℃
Colour temperature*	2700K-10000K
Brightness Range	0%~100%
100% Illuminance (5600K)	≈190 LUX (Bare Lamp , Distance 1 meter)
Mounting Method	1/4" thread, Magnet
Size	∅ 48x312mm
Weight	0.5 kg
Material	Aluminium alloy, PC, Magnets
Wireless Frequency	2.4GHz
Bluetooth transmission distance	15 meters (no interference)
Control Method	Bluetooth APP control, manual button control
Display Type	Monochrome OLED

*Note: The above data is based on SunCrafter Lab tests and there may be some variation in values with data marked with an asterick .

Illuminance Test Data

Colour temperature*	Distance	0.5m(Lux)	1m(Lux)	2m(Lux)
2700K	Bare Lamp	680	175	40
3200K	Bare Lamp	700	180	45
4300K	Bare Lamp	730	185	45
5600K	Bare Lamp	740	190	45
6500K	Bare Lamp	740	195	46
7500K	Bare Lamp	740	190	45
10000K	Bare Lamp	700	185	40

Notes

1. In order to avoid equipment failure, please do not expose this product to moisture or use in wet or rainy, sandy or dusty environments.
2. Do not disassemble or modify the product. Mishandling, including dropping the product, may result in permanent damage.
3. Keep this product and its parts out of the reach of children and animals.
4. Please ensure that the product is always free from moisture and is stored safely. Water and other liquids may contain minerals that can corrode the internal electronic circuits.
5. Avoid using or placing the product in high temperature environments, including direct strong, sunlight, as this may shorten the life of electronic parts, damage the battery or distort plastic parts or casings.
6. Avoid using the product in very low temperature environments as internal condensation or water particles may damage electronic circuitry as the temperature rises.
7. Avoid using or storing the product in dirty or dusty environments as this may damage components.
8. Avoid placing the product on or near hot surfaces or sources of heat such as lit cigarettes, naked flames or heating systems.
9. Do not disassemble the product by yourself. Inappropriate or unprofessional treatment may result in damage to the product.
10. Do not drop, knock or shake the product. Rough handling may damage the internal circuit board.
11. During use do not cover the light head with flammable materials.
12. To avoid burns, please do not handle the light if it is hot.
13. This product's battery contains potentially harmful materials and needs to be disposed of appropriately. Please follow your local waste management guidelines when recycling or disposing of the battery.

Maintenance

1. To prevent the accumulation of dust particles affecting the performance of the product, please carefully wipe the exterior of the product with a clean, soft, dry cloth at regular intervals.
2. The TL30 is covered by a 1-year warranty from the date of original purchase.
3. Product damage or failure to operate caused by inappropriate or irregular operation is not covered by the warranty.
4. Unauthorized repair or attempting repair will make the warranty void and any authorised repair will then be subject to charges.
5. If the product fails to function or is subjected to water or moisture please ensure it is professionally examined and repaired prior to using it.
6. Always use a clean, dry soft cloth to clean the lens on the product. Do not use harmful chemicals, cleaning agents or liquids to clean the product.
7. In the unlikely event that the product is found to be faulty please contact our Customer Service team who will be happy to assist you: cs@suncrafter.com.

*The timberpod, metal shelving featured and referenced in this manual are not included with this product but can be purchased separately.

FCC Warning

This device complies with part 15 of the FCC Rules. Operation is subject to the following two conditions: (1) This device may not cause harmful interference, and (2) this device must accept any interference received, including interference that may cause undesired operation.

Note: This equipment has been tested and found to comply with the limits for a Class B digital device, pursuant to part 15 of the FCC Rules. These limits are designed to provide reasonable protection against harmful interference in a residential installation. This equipment generates, uses and can radiate radio frequency energy and, if not installed and used in accordance with the instructions, may cause harmful interference to radio communications. However, there is no guarantee that interference will not occur in a particular installation. If this equipment does cause harmful interference to radio or television reception, which can be determined by turning the equipment off and on, the user is encouraged to try to correct the interference by one or more of the following measures:

—Reorient or relocate the receiving antenna.

—Increase the separation between the equipment and receiver.

—Connect the equipment into an outlet on a circuit different from that to which the receiver is connected.

—Consult the dealer or an experienced radio/TV technician for help.

Note: The Grantee is not responsible for any changes or modifications not expressly approved by the party responsible for compliance. such modifications could void the user's authority to operate the equipment.

The device has been evaluated to meet general RF exposure requirement.
This equipment complies with FCC's RF radiation exposure limits set forth for an uncontrolled environment. This device and its antenna(s) must not be co-located or conjunction with any other antenna or transmitter.

Statement

SunCrafter reserves the right to modify or correct all hardware and software specifications without prior notice. In the event of any discrepancy between the instruction manual and the actual product, please refer to the product itself. SunCrafter and its affiliates shall not be held liable for any direct, indirect, punitive, incidental, special, consequential, or property damage, or any harm to life resulting from the use or misuse of any SunCrafter product. The user assumes all risks associated with using this product, and this disclaimer does not affect your legal rights.

Lumin+
APP QR Code

To download the Lumin+ App, please scan the QR code or visit our website. For more information on operation modes please visit our website www.suncrafter.com

Manufacturer's Information

SUNCRAFTER

9meanders Inc

US Design & Made in China

Origin: China

Website: www.suncrafter.com