FCC REPORT

Report Reference No. ..... :	**TRE1804011702**	R/C…….: 68515
FCC ID ..... :	**2AOOFS401**	
Applicant's name ..... :	**Shenzhen Two Monkey technology co. Ltd.**	
Address.....:	Room 612, Building D, SDG Information Port, No.2 Kefeng Road, Nanshan District, Shenzhen, Guangdong, China	
Manufacturer.....:	Shenzhen Two Monkey technology co. Ltd.	
Address.....:	Room 612, Building D, SDG Information Port, No.2 Kefeng Road, Nanshan District, Shenzhen, Guangdong, China	
Test item description ..... :	**Translating Machine**	
Trade Mark .....:	DOSMONO	
Model/Type reference.....:	DOSMONO S401	
Listed Model(s) .....:	**-**	
Standard ..... :	**FCC CFR Title 47 Part 2** **FCC CFR Title 47 Part 22** **FCC CFR Title 47 Part 24**	
Date of receipt of test sample…….:	Apr.17,2018	
Date of testing……...:	Apr.18,2018-May.15,2018	
Date of issue…….:	May.16,2018	
Result..... ……...:	**Pass**	
Compiled by (position+printedname+signature)...:	File administrators Candy Liu	Candy Liu
Supervised by (position+printedname+signature)....:	Project Engineer Edward Pan	Edward Pan
Approved by (position+printedname+signature)....:	Manager Hans Hu	Hans Hu
Testing Laboratory Name ..... :	**Shenzhen Huatongwei International Inspection Co., Ltd.**	
Address.....:	1/F, Bldg 3, Hongfa Hi-tech Industrial Park, Genyu Road, Tianliao, Gongming, Shenzhen, China	

Shenzhen Huatongwei International Inspection Co., Ltd. All rights reserved.

This publication may be reproduced in whole or in part for non-commercial purposes as long as the Shenzhen Huatongwei International Inspection Co., Ltd. is acknowledged as copyright owner and source of the material. Shenzhen Huatongwei International Inspection Co., Ltd. takes no responsibility for and will not assume liability for damages resulting from the reader's interpretation of the reproduced material due to its placement and context.

The test report merely correspond to the test sample.

Contents

1.	**TEST STANDARDS AND REPORT VERSION**	**3**
1.1.	**Applicable Standards**	**3**
1.2.	**Report version information**	**3**
2.	**TEST DESCRIPTION**	**4**
3.	**SUMMARY**	**5**
3.1.	**Client Information**	**5**
3.2.	**Product Description**	**5**
3.3.	**Operation state**	**6**
3.4.	**EUT configuration**	**6**
3.5.	**Modifications**	**6**
4.	**TEST ENVIRONMENT**	**7**
4.1.	**Address of the test laboratory**	**7**
4.2.	**Test Facility**	**7**
4.3.	**Equipments Used during the Test**	**8**
4.4.	**Environmental conditions**	**9**
4.5.	**Statement of the measurement uncertainty**	**9**
5.	**TEST CONDITIONS AND RESULTS**	**10**
5.1.	**Conducted Output Power**	**10**
5.2.	**Peak-Average Ratio**	**11**
5.3.	**99% Occupied Bandwidth & 26 dB Bandwidth**	**12**
5.4.	**Band Edge**	**13**
5.5.	**Conducted Spurious Emissions**	**14**
5.6.	**Frequency stability VS Temperature measurement**	**15**
5.7.	**Frequency stability VS Voltage measurement**	**16**
5.8.	**ERP and EIRP**	**17**
5.9.	**Radiated Spurious Emission**	**20**
6.	**TEST SETUP PHOTOS OF THE EUT**	**24**
7.	**EXTERNAL AND INTERNAL PHOTOS OF THE EUT**	**24**
8.	**APPENDIX REPORT**	**24**

1. TEST STANDARDS AND REPORT VERSION

1.1. Applicable Standards

The tests were performed according to following standards:

FCC Rules Part 2: FREQUENCY ALLOCA-TIONS AND RADIO TREATY MAT-TERS; GENERAL RULES AND REG-ULATIONS
FCC Rules Part 22: PRIVATE LAND MOBILE RADIO SERVICES.
FCC Rules Part 24: PUBLIC MOBILE SERVICES
TIA/EIA 603 E March 2016:Land Mobile FM or PM Communications Equipment Measurement and Performance Standards.
ANSI C63.26: 2015: American National Standard for Compliance Testing of Transmitters Used in Licensed Radio Services
KDB 971168 D01 Power Meas License Digital Systems v03: MEASUREMENT GUIDANCE FOR CERTIFICATION OF LICENSED DIGITAL TRANSMITTERS

1.2. Report version information

Revision No.	Date of issue	Description
N/A	May.16,2018	Original

2. Test Description

Test Item	Section in CFR 47	Result	Test Engineer
Conducted Output Power	Part 2.1046 Part 22.913(a) Part 24.232(c)	Pass	Baozhu Hu
Peak-to-Average Ratio	Part 24.232	Pass	Baozhu Hu
99% Occupied Bandwidth & 26 dB Bandwidth	Part 2.1049 Part 22.917(b) Part 24.238(b)	Pass	Baozhu Hu
Band Edge	Part 2.1051 Part 22.917 Part 24.238	Pass	Baozhu Hu
Conducted Spurious Emissions	Part 2.1051 Part 22.917 Part 24.238	Pass	Baozhu Hu
Frequency stability vs temperature	Part 2.1055(a)(1)(b) Part 22.355 Part 24.235	Pass	Baozhu Hu
Frequency stability vs voltage	Part 2.1055(d)(1)(2) Part 22.355 Part 24.235	Pass	Baozhu Hu
ERP and EIRP	Part 22.913(a) Part 24.232(b)	Pass	Jiuru Pan
Radiated Spurious Emissions	Part 2.1053 Part 22.917 Part 24.238	Pass	Jiuru Pan

Note: The measurement uncertainty is not included in the test result.

3. SUMMARY

3.1. Client Information

Applicant:	Shenzhen Two Monkey technology co. Ltd.
Address:	Room 612, Building D, SDG Information Port, No.2 Kefeng Road, Nanshan District, Shenzhen, Guangdong, China
Manufacturer:	Shenzhen Two Monkey technology co. Ltd.
Address:	Room 612, Building D, SDG Information Port, No.2 Kefeng Road, Nanshan District, Shenzhen, Guangdong, China

3.2. Product Description

Name of EUT:	Translating Machine
Trade Mark:	DOSMONO
Model No.:	DOSMONO S401
Listed Model(s):	-
IMEI Code:	Conducted: 866811030978590 Radiated: 866811030978525
SIM Information:	Support One SIM Card
Power supply:	DC 3.7V
Adapter information:	Model:JHD-AP015U-050300BA-C Input: 100-240V a.c., 50/60Hz, 0.45A Output: 5V d.c., 3000mA
Hardware version:	YK919_FB_SH_V0.3
Software version:	V1.0.1
3G:	
Operation Band:	FDD Band II, FDD Band V
Power Class:	Class 3
Modulation Type:	QPSK
Transmit frequency:	FDD Band II: 1852.40MHz~1907.60MHz FDD Band V: 826.40MHz~846.60MHz
Receive frequency:	FDD Band II: 1932.40MHz~1987.60MHz FDD Band V: 871.40MHz~891.60MHz
DC-HSUPA Release Version:	Not Supported
Antenna type:	PIFA Antenna
Antenna gain:	Band II: 1.0dBi, Band V: 1.0dBi

3.3. Operation state

➢ **Test frequency list**

FDD Band II		FDD Band V	
Channel	Frequency (MHz)	Channel	Frequency (MHz)
9262	1852.40	4132	826.40
9400	1880.00	4183	836.60
9538	1907.60	4233	846.60

➢ **Test mode**

Antenna port conducted and radiated test items were performed according to KDB 971168 D01 Power Meas. License Digital Systems v03 and ANSI C63.26-2015 with maximum output power.

Radiated measurements were performed with rotating EUT in different three orthogonal test planes to find the maximum emission.

Radiated emissions were investigated as following frequency range:

30 MHz to 10th harmonic for FDD Band II, Band V.

All modes and data rates and positions were investigated.

Test modes are chosen to be reported as the worst case configuration below:

Test modes		
Band	**Radiated**	**Conducted**
WCDMA Band V	■ RMC 12.2Kbps Link	■ RMC 12.2Kbps Link
WCDMA Band II	■ RMC 12.2Kbps Link	■ RMC 12.2Kbps Link

3.4. EUT configuration

The following peripheral devices and interface cables were connected during the measurement:

● - supplied by the manufacturer

○ - supplied by the lab

○	/	Manufacturer:	/
		Model No.:	/
○	/	Manufacturer:	/
		Model No.:	/

3.5. Modifications

No modifications were implemented to meet testing criteria.

4. TEST ENVIRONMENT

4.1. Address of the test laboratory

Laboratory: Shenzhen Huatongwei International Inspection Co., Ltd.
Address: 1/F, Bldg 3, Hongfa Hi-tech Industrial Park, Genyu Road, Tianliao, Gongming, Shenzhen, China.

4.2. Test Facility

CNAS-Lab Code: L1225

Shenzhen Huatongwei International Inspection Co., Ltd. has been assessed and proved to be in compliance with CNAS-CL01 Accreditation Criteria for Testing and Calibration Laboratories (identical to ISO/IEC17025: 2005 General Requirements) for the Competence of Testing and Calibration Laboratories.

A2LA-Lab Cert. No.: 3902.01

Shenzhen Huatongwei International Inspection Co., Ltd. EMC Laboratory has been accredited by A2LA for technical competence in the field of electrical testing, and proved to be in compliance with ISO/IEC 17025: 2005 General Requirements for the Competence of Testing and Calibration Laboratories and any additional program requirements in the identified field of testing.

FCC-Registration No.: 762235

Shenzhen Huatongwei International Inspection Co., Ltd. EMC Laboratory has been registered and fully described in a report filed with the FCC (Federal Communications Commission). The acceptance letter from the FCC is maintained in our files.

IC-Registration No.:5377B-1

Two 3m Alternate Test Site of Shenzhen Huatongwei International Inspection Co., Ltd. has been registered by Certification and Engineering Bureau of Industry Canada for the performance of radiated measurements with Registration No.: 5377B-1.

ACA

Shenzhen Huatongwei International Inspection Co., Ltd. EMC Laboratory can also perform testing for the Australian C-Tick mark as a result of our A2LA accreditation.

4.3. Equipments Used during the Test

RF Conducted Test						
Item	Equipment	Manufacturer	Model No.	Serial No.	Last Cal. (mm-dd-yy)	Next Cal. (mm-dd-yy)
1	Universal Radio Communication	Rohde&Schwarz	CMU200	112012	11/11/2017	11/11/2018
2	Wide Radio communication tester	Rohde&Schwarz	CMW500	137688	10/26/2017	10/25/2018
3	Spectrum Analyzer	Rohde&Schwarz	FSW26	103440	11/11/2017	11/10/2018
4	MXA Signal Analyzer	Agilent	N9020A	MY5050187	11/10/2017	11/09/2018
5	Splitter	Mini-Circuit	ZAPD-4	400059	03/20/2017	03/19/2018
6	Climate Chamber	ESPEC	EL-10KA	05107008	11/10/2017	11/09/2018

Radiated Emissions						
Item	Equipment	Manufacturer	Model No.	Serial No.	Last Cal. (mm-dd-yy)	Next Cal. (mm-dd-yy)
1	EMI Test Receiver	R&S	ESCI	101247	11/11/2017	11/10/2018
2	Loop Antenna	R&S	HFH2-Z2	100020	11/20/2017	11/19/2018
3	Ultra-Broadband Antenna	SCHWARZBECK	VULB9163	538	04/05/2017	04/04/2020
4	Preamplifier	SCHWARZBECK	BBV 9743	9743-0022	10/18/2017	10/17/2018
5	RF Connection Cable	HUBER+SUHNER	RE-7-FL	N/A	11/21/2017	11/20/2018
6	EMI Test Software	R&S	ESK1	N/A	N/A	N/A
7	Spectrum Analyzer	R&S	FSP40	100597	11/11/2017	11/10/2018
8	Horn Antenna	SCHWARZBECK	9120D	1011	03/27/2017	03/26/2020
9	Horn Antenna	SCHWARZBECK	BBHA9170	25841	03/27/2017	03/26/2018
10	Broadband Preamplifier	SCHWARZBECK	BBV 9718	9718-248	10/18/2017	10/17/2018
11	High pass filter	Compliance Direction systems	BSU-6	34202	11/11/2017	11/10/2018
12	RF Connection Cable	HUBER+SUHNER	RE-7-FH	N/A	11/21/2017	11/20/2018
13	Signal Generator	Rohde&Schwarz	SMB100A	114360	06/13/2017	06/12/2018
14	Universal Radio Communication	Rohde&Schwarz	CMU200	112012	11/11/2017	11/11/2018
15	Wide Radio communication tester	Rohde&Schwarz	CMW500	137688	10/26/2017	10/25/2018
16	EMI Test Software	Audix	E3	N/A	N/A	N/A
17	Turntable	MATURO	TT2.0	N/A	N/A	N/A
18	Antenna Mast	MATURO	TAM-4.0-P	N/A	N/A	N/A

4.4. Environmental conditions

During the measurement the environmental conditions were within the listed ranges:

Voltage	VN=Nominal Voltage	DC 3.70V
	VL=Lower Voltage	DC 3.60V
	VH=Higher Voltage	DC 4.20V
Temperature	TN=Normal Temperature	25 °C
	Extreme Temperature	From −30° to + 50° centigrade
Humidity	30~60 %	
Air Pressure	950-1050 hPa	

4.5. Statement of the measurement uncertainty

The data and results referenced in this document are true and accurate. The reader is cautioned that there may be errors within the calibration limits of the equipment and facilities. The measurement uncertainty was calculated for all measurements listed in this test report acc. to TR-100028-01”Electromagnetic compatibilityand Radio spectrum Matters (ERM);Uncertainties in the measurementof mobile radio equipment characteristics;Part 1”and TR-100028-02 “Electromagnetic compatibilityand Radio spectrum Matters (ERM);Uncertainties in the measurementof mobile radio equipment characteristics;Part 2 “ and is documented in the Shenzhen Huatongwei International Inspection Co., Ltd quality system acc. to DIN EN ISO/IEC 17025. Furthermore, component and process variability of devices similar to that tested may result in additional deviation. The manufacturer has the sole responsibility of continued compliance of the device.

Hereafter the best measurement capability for Shenzhen Huatongwei laboratory is reported:

Test Items	MeasurementUncertainty	Notes
Frequency stability	25 Hz	(1)
Transmitter power conducted	0.57 dB	(1)
Transmitter power Radiated	2.20 dB	(1)
Conducted spurious emission 9KHz-12.75 GHz	1.60 dB	(1)
Conducted Emission 9KHz-30MHz	3.39 dB	(1)
Radiated Emission 30~1000MHz	4.24 dB	(1)
Radiated Emissio 1~18GHz	5.16 dB	(1)
Radiated Emissio 18-40GHz	5.54 dB	(1)
Occupied Bandwidth	---------	(1)

(1) This uncertainty represents an expanded uncertainty expressed at approximately the 95% confidence level using a coverage factor of k=1.96.

5. TEST CONDITIONS AND RESULTS

5.1. Conducted Output Power

LIMIT

N/A

TEST CONFIGURATION

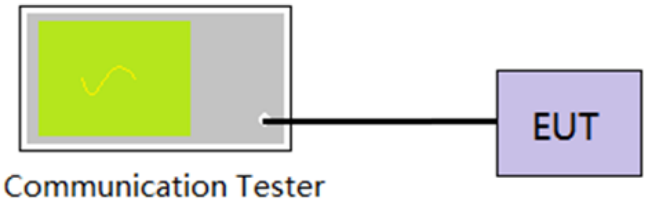

TEST PROCEDURE

1. The EUT output port was connected to communication tester.
2. Set EUT at maximum power through communication tester.
3. Select lowest, middle, and highest channels for each band and different modulation.
4. Measure the maximum burst average power.

TEST MODE:

Please refer to the clause 3.3

TEST RESULTS

☒ **Passed** ☐ **Not Applicable**

Refer to appendix A on the section 8 appendix report

5.2. Peak-Average Ratio

LIMIT

13dB

TEST CONFIGURATION

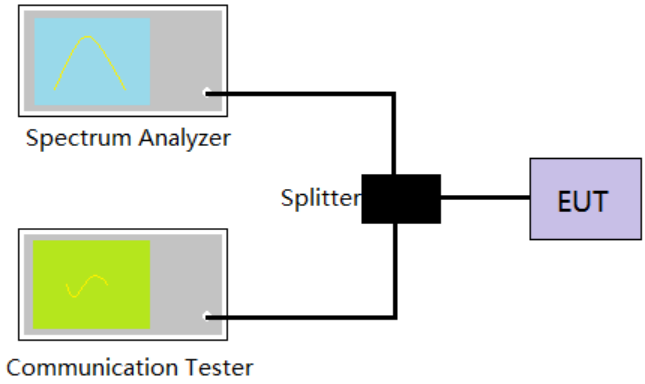

TEST PROCEDURE

1. The EUT was connected to the spectrum analyzer and communication tester via a power splitter
2. Set EUT in maximum power output.
3. Center Frequency = Carrier frequency, RBW > Emission bandwidth of signal
4. The signal analyzer was set to collect one million samples to generate the CCDF curve
5. The measurement interval was set depending on the type of signal analyzed.
   i. For continuous signals (>98% duty cycle), the measurement interval was set to 1ms.
   ii. For bursttransmissions, the spectrum analyzer is set to use an internal " RF Burst" trigger that issynced with an incoming pulse and the measurement interval is set to less than the durationof the " on time" of one burst to ensure that energy is only captured during a time in whichthetransmitter is operating at maximum power
6. Record the maximum PAPR level associated with a probability of 0.1%.

TEST MODE:

Please refer to the clause 3.3

TEST RESULTS

☒ **Passed** ☐ **Not Applicable**

Refer to appendix B on the section 8 appendix report

5.3. 99% Occupied Bandwidth & 26 dB Bandwidth

LIMIT

N/A

TEST CONFIGURATION

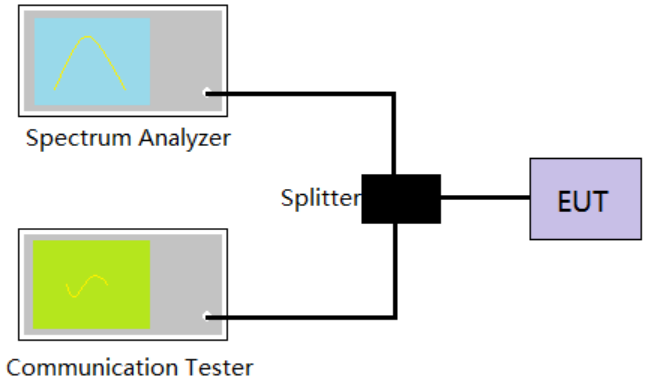

TEST PROCEDURE

1. The EUT was connected to the spectrum analyzer and communication tester via a power splitter
2. Set EUT in maximum power output.
3. Spectrum analyzer setting as follow:

   Center Frequency= Carrier frequency, RBW=1% to 5% of anticipated OBW, VBW= 3 * RBW, Detector=Peak,

   Trace maximum hold.
4. Record the value of 99% Occupied bandwidth and -26dB bandwidth.

TEST MODE:

Please refer to the clause 3.3

TEST RESULTS

☒ **Passed** ☐ **Not Applicable**

Refer to appendix C on the section 8 appendix report

5.4. Band Edge

LIMIT

Part 24.238 and Part 22.917 specify that the power of any emission outside of the authorized operating frequency ranges must be attenuated below the transmitting power (P) by a factor of at least 43 + 10 log(P) dB.

The specification that emissions shall be attenuated below the transmitter power (P) by at least 43 + 10 log (P) dB, translates in the relevant power range (1 to 0.001 W) to -13 dBm. At 1 W the specified minimum attenuation becomes 43 dB and relative to a 30 dBm (1 W) carrier becomes a limit of -13 dBm. At 0.001 W (0 dBm) the minimum attenuation is 13 dB, which again yields a limit of -13 dBm. In this way a translation of the specification from relative to absolute terms is carried out.

TEST CONFIGURATION

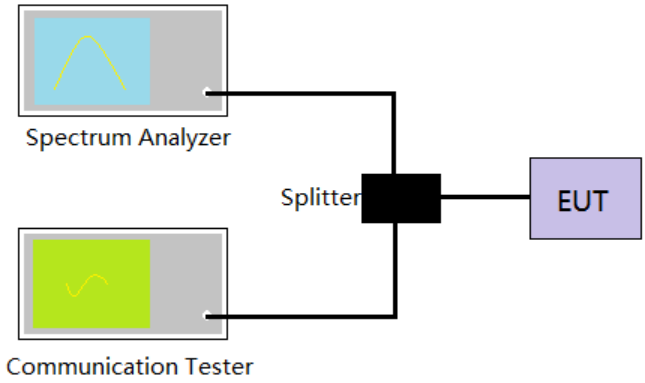

TEST PROCEDURE

1. The EUT was connected to the spectrum analyzer and communication tester via a power splitter
2. Set EUT in maximum power output.
3. The band edges of low and high channels were measured.
4. Spectrum analyzer setting as follow:

   RBW=100KHz, VBW = 300KHz, Sweep time= Auto
5. Record the test plot.

TEST MODE:

Please refer to the clause 3.3

TEST RESULTS

☒ **Passed** ☐ **Not Applicable**

Refer to appendix D on the section 8 appendix report

5.5. Conducted Spurious Emissions

LIMIT

Part 24.238 and Part 22.917 specify that the power of any emission outside of the authorized operating frequency ranges must be attenuated below the transmitting power (P) by a factor of at least 43 + 10 log(P) dB.

The specification that emissions shall be attenuated below the transmitter power (P) by at least 43 + 10 log (P) dB, translates in the relevant power range (1 to 0.001 W) to -13 dBm. At 1 W the specified minimum attenuation becomes 43 dB and relative to a 30 dBm (1 W) carrier becomes a limit of -13 dBm. At 0.001 W (0 dBm) the minimum attenuation is 13 dB, which again yields a limit of -13 dBm. In this way a translation of the specification from relative to absolute terms is carried out.

TEST CONFIGURATION

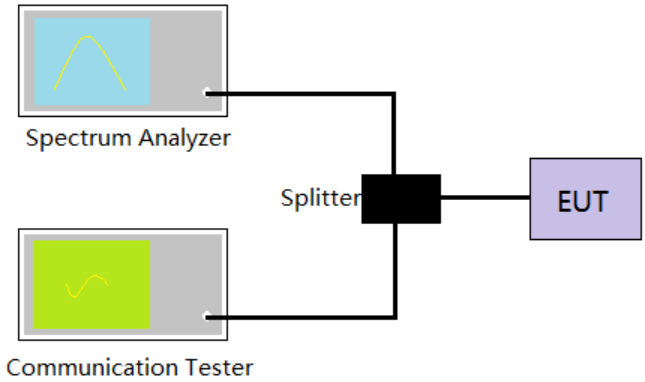

TEST PROCEDURE

1. The EUT was connected to the spectrum analyzer and communication tester via a power splitter
2. Set EUT in maximum power output.
3. Spectrum analyzer setting as follow:

   Below 1GHz, RBW=100KHz, VBW = 300KHz, Detector=Peak, Sweep time= Auto

   Above 1GHz, RBW=1MHz, VBW=3MHz, Detector=Peak, Sweep time= Auto

   Scan frequency range up to 10th harmonic.
4. Record the test plot.

TEST MODE:

Please refer to the clause 3.3

TEST RESULTS

☒ **Passed** ☐ **Not Applicable**

Refer to appendix E on the section 8 appendix report

5.6. Frequency stability VS Temperature measurement

LIMIT

2.5ppm

TEST CONFIGURATION

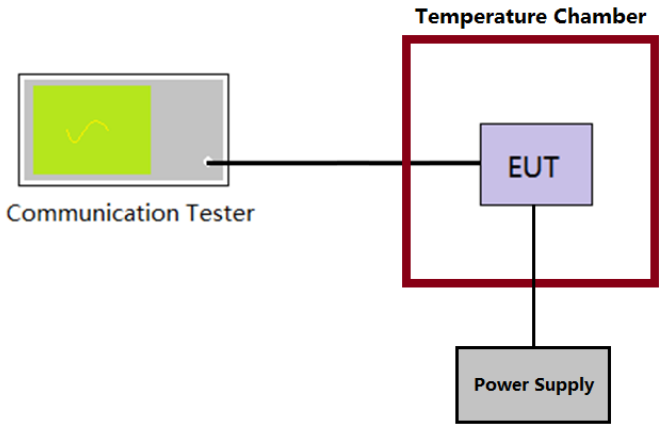

TEST PROCEDURE

1. The equipment under test was connected to an external DC power supply and input rated voltage.
2. The EUT output port was connected to communication tester.
3. The EUT was placed inside the temperature chamber.
4. Turn EUT off and set the chamber temperature to –30°C. After the temperature stabilized for approximately 30 minutes recorded the frequency.
5. Repeat step 4 measure with 10°C increased per stage until the highest temperature of +50°C reached.

TEST MODE:

Please refer to the clause 3.3

TEST RESULTS

☒ **Passed** ☐ **Not Applicable**

Refer to appendix F on the section 8 appendix report

5.7. Frequency stability VS Voltage measurement

LIMIT

2.5ppm

TEST CONFIGURATION

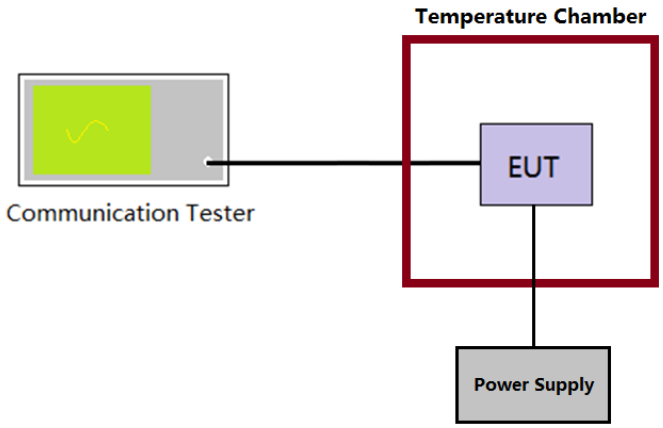

TEST PROCEDURE

1. The equipment under test was connected to an external DC power supply and input rated voltage.
2. The EUT output port was connected to communication tester.
3. The EUT was placed inside the temperature chamber at 25°C
4. The power supply voltage to the EUT was varied ±15% of the nominal value measured at the input to the EUT
5. Record the maximum frequency change.

TEST MODE:

Please refer to the clause 3.3

TEST RESULTS

☒ **Passed** ☐ **Not Applicable**

Refer to appendix F on the section 8 appendix report

5.8. ERP and EIRP

LIMIT

WCDMA Band V: 7W (38.45dBm) ERP

WCDMA Band II: 2W (33dBm) EIRP

TEST CONFIGURATION

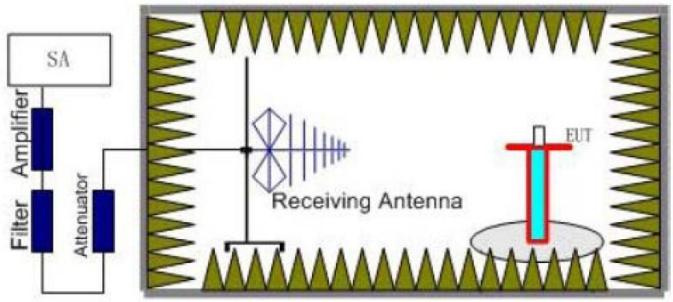

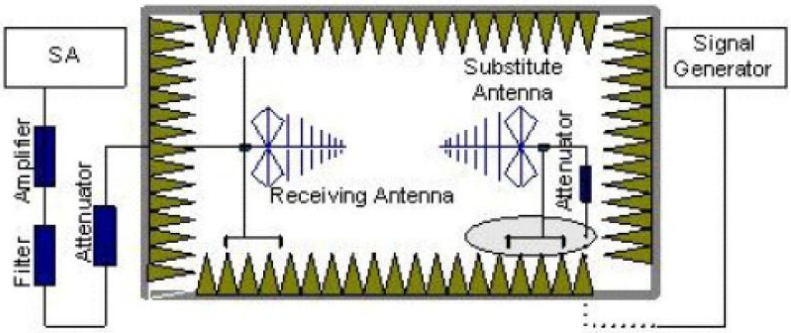

TEST PROCEDURE

1. EUT was placed on a 0.8 meter for below 1GHz and 1.5 meter for above 1GHz high non-conductive stand at a 3 meter test distance from the receive antenna. A receiving antenna was placed on the antenna mast 3 meters from the EUT for emission measurements. The height of receiving antenna is 1.0m. Detected emissions were maximized at each frequency by rotating the EUT through 360° and adjusting the receiving antenna polarization. The radiated emission measurements of all transmit frequencies in three channels (High, Middle, Low) were measured with peak detector.
2. A log-periodic antenna or double-ridged waveguide horn antenna shall be substituted in place of the EUT. The log-periodic antenna will be driven by a signal generator and the level will be adjusted till the same power value on the spectrum analyzer or receiver. The level of the spurious emissions can be calculated through the level of the signal generator, cable loss, the gain of the substitution antenna and the reading of the spectrum analyzer or receiver.
3. The EUT is then put into continuously transmitting mode at its maximum power level during the test.Set Test Receiver or Spectrum RBW=1MHz,VBW=3MHz for above 1GHz and RBW=100kHz,VBW=300kHz for 30MHz to 1GHz,, And the maximum value of the receiver should be recorded as (Pr).
4. The EUT shall be replaced by a substitution antenna. In the chamber, an substitution antenna for the frequency band of interest is placed at the reference point of the chamber. An RF Signal source for the frequency band of interest isconnected to the substitution antenna with a cable that has been constructed to not interfere with the radiation pattern of the antenna. A power (PMea) is applied to the input of the substitution antenna, and adjust the level of the signal generator output until the value of the receiver reach the previously recorded (Pr). The power of signal source (PMea) is recorded. The test should be performed by rotating the test item and adjusting the receiving antenna polarization.
5. A amplifier should be connected to the Signal Source output port. And the cable should be connect between the Amplifier and the Substitution Antenna. The cable loss (Pcl) ,the Substitution Antenna Gain (Ga) and the Amplifier Gain (PAg) should be recorded after test.

6. The measurement results are obtained as described below:
   Power(EIRP)=PMea- PAg - Pcl + Ga
   We used SMF100A micowave signal generator which signal level can up to 33dBm,so we not used power Amplifier for substituation test; The measurement results are amend as described below:
   Power(EIRP)=PMea- Pcl + Ga
7. This value is EIRP since the measurement is calibrated using an antenna of known gain (2.15 dBi) and known input power.
   ERP can be calculated from EIRP by subtracting the gain of the dipole, ERP = EIRP-2.15dBi.

TEST MODE:

Please refer to the clause 3.3

TEST RESULTS

☒ **Passed** ☐ **Not Applicable**

Mode	Channel	Antenna Pol.	EIRP	Limit (dBm)	Result
WCDMA Band II	9262	V	22.85	<33.00	Pass
		H	27.49		
	9400	V	21.81		
		H	26.4		
	9538	V	24.45		
		H	28.34		

Mode	Channel	Antenna Pol.	ERP	Limit (dBm)	Result
WCDMA Band V	4132	V	19.91	<38.45	Pass
		H	22.4		
	4183	V	16.53		
		H	20.65		
	4233	V	20.47		
		H	22.66		

5.9. Radiated Spurious Emission

LIMIT

-13dBm

TEST CONFIGURATION

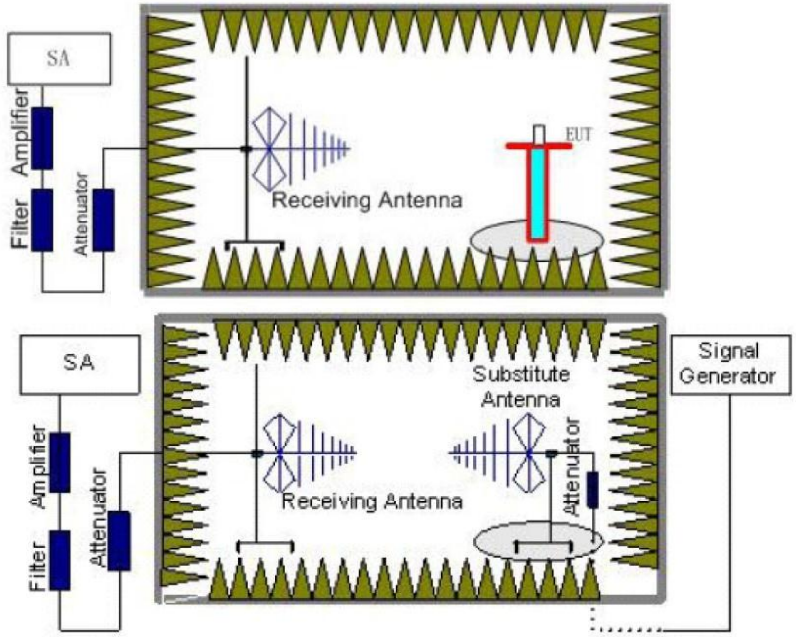

TEST RESULTS

1. EUT was placed on a 0.8 meter for below 1GHz and 1.5 meter for above 1GHz high non-conductive stand at a 3 meter test distance from the receive antenna. A receiving antenna was placed on the antenna mast 3 meters from the EUT for emission measurements. The height of receiving antenna is 1.0m. Detected emissions were maximized at each frequency by rotating the EUT through 360° and adjusting the receiving antenna polarization. The radiated emission measurements of all transmit frequencies in three channels (High, Middle, Low) were measured with peak detector.
2. A log-periodic antenna or double-ridged waveguide horn antenna shall be substituted in place of the EUT. The log-periodic antenna will be driven by a signal generator and the level will be adjusted till the same power value on the spectrum analyzer or receiver. The level of the spurious emissions can be calculated through the level of the signal generator, cable loss, the gain of the substitution antenna and the reading of the spectrum analyzer or receiver.
3. The EUT is then put into continuously transmitting mode at its maximum power level during the test.Set Test Receiver or Spectrum RBW=1MHz,VBW=3MHz for above 1GHz and RBW=100kHz,VBW=300kHz for 30MHz to 1GHz, And the maximum value of the receiver should be recorded as (Pr).
4. The EUT shall be replaced by a substitution antenna. In the chamber, an substitution antenna for the frequency band of interest is placed at the reference point of the chamber. An RF Signal source for the frequency band of interest isconnected to the substitution antenna with a cable that has been constructed to not interfere with the radiation pattern of the antenna. A power (PMea) is applied to the input of the substitution antenna, and adjust the level of the signal generator output until the value of the receiver reach the previously recorded (Pr). The power of signal source (PMea) is recorded. The test should be performed by rotating the test item and adjusting the receiving antenna polarization.
5. A amplifier should be connected to the Signal Source output port. And the cable should be connect between the Amplifier and the Substitution Antenna. The cable loss (Pcl) ,the Substitution Antenna Gain (Ga) and the Amplifier Gain (PAg) should be recorded after test.

6. The measurement results are obtained as described below:
   Power(EIRP)=PMea- PAg - Pcl + Ga
   We used SMF100A micowave signal generator which signal level can up to 33dBm,so we not used power Amplifier for substituation test; The measurement results are amend as described below:
   Power(EIRP)=PMea- Pcl + Ga
7. This value is EIRP since the measurement is calibrated using an antenna of known gain (2.15 dBi) and known input power.
   ERP can be calculated from EIRP by subtracting the gain of the dipole, ERP = EIRP-2.15dBi.

TEST MODE:

Please refer to the clause 3.3

TEST RESULTS

☒ **Passed** ☐ **Not Applicable**

Note: Worst case at WCDMA Band II/ WCDMA Band V

WCDMA Band II					
Channel	Frequency (MHz)	Spurious Emission		Limit (dBm)	Result
		Polarization	Level (dBm)		
9262	266.39	Vertical	-54.88	<-13.00	Pass
	598.09	V	-55.08		
	1260.88	V	-51.34		
	2519.18	V	-49.85		
	3705.85	V	-43.97		
	5562.15	V	-41.28		
	184.14	Horizontal	-59.97	<-13.00	Pass
	266.39	H	-55.00		
	1258.11	H	-53.46		
	1933.18	H	-47.21		
	3700.48	H	-37.16		
	5562.15	H	-36.55		
9400	266.39	Vertical	-55.83	<-13.00	Pass
	600.20	V	-55.42		
	1259.49	V	-51.24		
	2519.18	V	-46.00		
	3754.53	V	-39.24		
	5643.40	V	-36.61		
	184.14	Horizontal	-57.03	<-13.00	Pass
	600.20	H	-61.66		
	1259.49	H	-51.85		
	2274.50	H	-50.34		
	3754.53	H	-45.99		
	5643.40	H	-41.41		
9538	204.63	Vertical	-58.58	<-13.00	Pass
	414.90	V	-57.90		
	1262.26	V	-51.37		
	2440.18	V	-47.24		
	3814.91	V	-40.30		
	5725.84	V	-33.01		
	266.39	Horizontal	-63.36	<-13.00	Pass
	492.92	H	-63.96		
	1258.11	H	-48.25		
	1987.01	H	-45.52		
	3814.91	H	-43.40		
	5725.84	H	-37.86		

Remark:
1. The emission behaviour belongs to narrowband spurious emission.
2. The emission levels of not record in the report are very lower than the limit and not show in test report.

WCDMA Band V					
Channel	Frequency (MHz)	Spurious Emission		Limit (dBm)	Result
		Polarization	Level (dBm)		
4132	184.14	Vertical	-54.53	<-13.00	Pass
	598.09	V	-55.36		
	1652.13	V	-49.62		
	2475.28	V	-46.65		
	4101.82	V	-56.75		
	6814.28	V	-49.52		
	184.14	Horizontal	-56.34	<-13.00	Pass
	266.39	H	-57.14		
	1650.32	H	-51.32		
	2450.93	H	-45.85		
	3377.36	H	-58.31		
	5505.96	H	-52.84		
4183	266.39	Vertical	-56.06	<-13.00	Pass
	600.20	V	-58.22		
	1713.13	V	-46.57		
	2513.65	V	-44.93		
	4101.82	V	-56.83		
	7466.20	V	-47.50		
	184.14	Horizontal	-56.89	<-13.00	Pass
	266.39	H	-55.82		
	1674.06	H	-51.00		
	2519.18	H	-47.33		
	5076.48	H	-52.93		
	6273.63	H	-50.71		
4233	184.14	Vertical	-52.41	<-13.00	Pass
	600.20	V	-55.74		
	1690.69	V	-47.80		
	2535.84	V	-42.79		
	3382.26	V	-57.27		
	4228.66	V	-56.07		
	184.14	Horizontal	-59.20	<-13.00	Pass
	266.39	H	-57.62		
	1694.41	H	-48.57		
	2538.63	H	-46.25		
	3382.26	H	-57.17		
	7553.33	H	-46.88		

Remark:
1. The emission behaviour belongs to narrowband spurious emission.
2. The emission levels of not record in the report are very lower than the limit and not show in test report.

6. TEST SETUP PHOTOS OF THE EUT

Radiated emission:

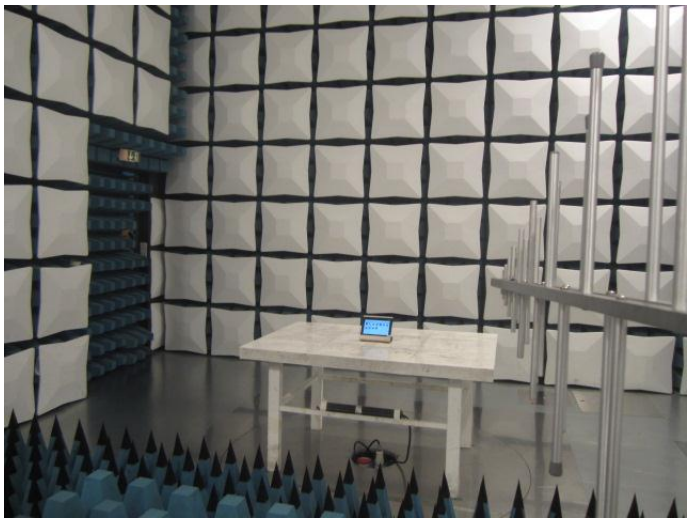

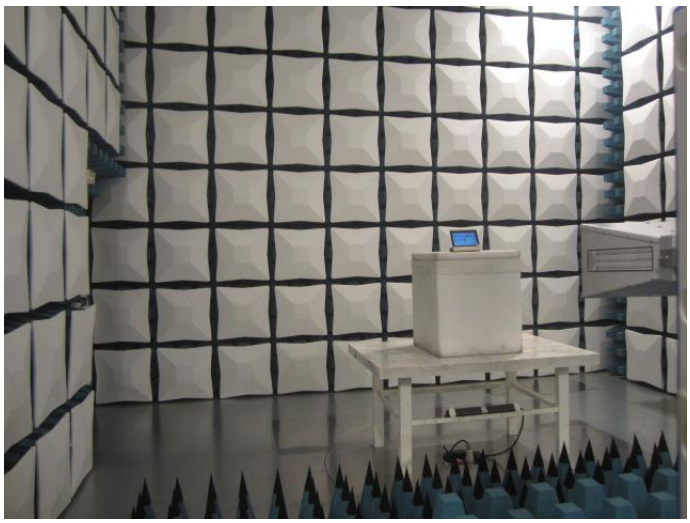

7. EXTERNAL AND INTERNAL PHOTOS OF THE EUT

Refere to the test report No.: TRE1804011701.

8. APPENDIX REPORT

8.1 Appendix A: Conducted Output Power

Test Result

Band	Channel	Power(dBm)	Limit(dBm)	Verdict
Band II	9262	22.70	33	PASS
Band II	9400	22.76	33	PASS
Band II	9538	22.57	33	PASS
Band V	4132	23.77	38.5	PASS
Band V	4182	23.74	38.5	PASS
Band V	4233	23.73	38.5	PASS

Band	Channel	SubTest	Power(dBm)	Limit(dBm)	Verdict
Band II	9262	HSDPA_Sub0	21.39	33	PASS
Band II	9262	HSDPA_Sub1	20.88	33	PASS
Band II	9262	HSDPA_Sub2	20.90	33	PASS
Band II	9262	HSDPA_Sub3	20.92	33	PASS
Band II	9400	HSDPA_Sub0	21.45	33	PASS
Band II	9400	HSDPA_Sub1	20.96	33	PASS
Band II	9400	HSDPA_Sub2	20.97	33	PASS
Band II	9400	HSDPA_Sub3	20.95	33	PASS
Band II	9538	HSDPA_Sub0	21.36	33	PASS
Band II	9538	HSDPA_Sub1	20.92	33	PASS
Band II	9538	HSDPA_Sub2	20.96	33	PASS
Band II	9538	HSDPA_Sub3	20.92	33	PASS
Band V	4132	HSDPA_Sub0	22.58	38.5	PASS
Band V	4132	HSDPA_Sub1	22.11	38.5	PASS
Band V	4132	HSDPA_Sub2	22.14	38.5	PASS
Band V	4132	HSDPA_Sub3	22.12	38.5	PASS
Band V	4182	HSDPA_Sub0	22.57	38.5	PASS
Band V	4182	HSDPA_Sub1	22.12	38.5	PASS
Band V	4182	HSDPA_Sub2	22.18	38.5	PASS
Band V	4182	HSDPA_Sub3	22.16	38.5	PASS
Band V	4233	HSDPA_Sub0	22.62	38.5	PASS
Band V	4233	HSDPA_Sub1	22.10	38.5	PASS
Band V	4233	HSDPA_Sub2	22.17	38.5	PASS
Band V	4233	HSDPA_Sub3	22.13	38.5	PASS

Band	Channel	SubTest	Power(dBm)	Limit(dBm)	Verdict
Band II	9262	HSUPA_Sub1	19.00	33	PASS
Band II	9262	HSUPA_Sub2	20.03	33	PASS
Band II	9262	HSUPA_Sub3	19.99	33	PASS
Band II	9262	HSUPA_Sub4	19.06	33	PASS
Band II	9262	HSUPA_Sub5	19.91	33	PASS
Band II	9400	HSUPA_Sub1	19.09	33	PASS
Band II	9400	HSUPA_Sub2	20.10	33	PASS
Band II	9400	HSUPA_Sub3	20.10	33	PASS
Band II	9400	HSUPA_Sub4	19.13	33	PASS
Band II	9400	HSUPA_Sub5	20.02	33	PASS
Band II	9538	HSUPA_Sub1	19.08	33	PASS
Band II	9538	HSUPA_Sub2	20.04	33	PASS
Band II	9538	HSUPA_Sub3	19.83	33	PASS
Band II	9538	HSUPA_Sub4	19.08	33	PASS
Band II	9538	HSUPA_Sub5	20.02	33	PASS
Band V	4132	HSUPA_Sub1	19.97	38.5	PASS
Band V	4132	HSUPA_Sub2	21.01	38.5	PASS
Band V	4132	HSUPA_Sub3	21.05	38.5	PASS
Band V	4132	HSUPA_Sub4	20.03	38.5	PASS
Band V	4132	HSUPA_Sub5	20.95	38.5	PASS
Band V	4182	HSUPA_Sub1	20.02	38.5	PASS
Band V	4182	HSUPA_Sub2	20.71	38.5	PASS
Band V	4182	HSUPA_Sub3	21.03	38.5	PASS
Band V	4182	HSUPA_Sub4	20.04	38.5	PASS
Band V	4182	HSUPA_Sub5	20.95	38.5	PASS
Band V	4233	HSUPA_Sub1	19.98	38.5	PASS
Band V	4233	HSUPA_Sub2	20.97	38.5	PASS
Band V	4233	HSUPA_Sub3	20.86	38.5	PASS
Band V	4233	HSUPA_Sub4	20.04	38.5	PASS
Band V	4233	HSUPA_Sub5	20.96	38.5	PASS

8.2 Appendix B: Peak-to-Average Ratio

Test Result

Band	Channel	Peak-to-Average Ratio(dB)	Limit(dBm)	Verdict
Band II	9262	2.92	13	PASS
Band II	9400	2.84	13	PASS
Band II	9538	2.77	13	PASS
Band V	4132	2.86	13	PASS
Band V	4182	2.62	13	PASS
Band V	4233	2.79	13	PASS

Test Graphs

Band II_9262

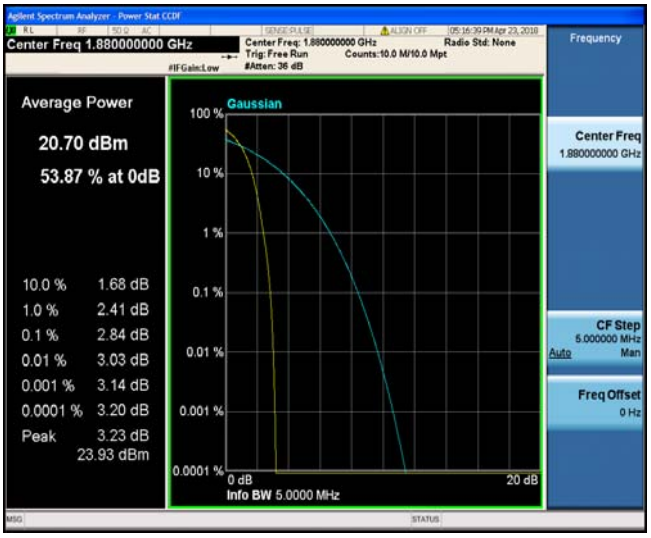

Band II_9400

Band II_9538

Band V_4132

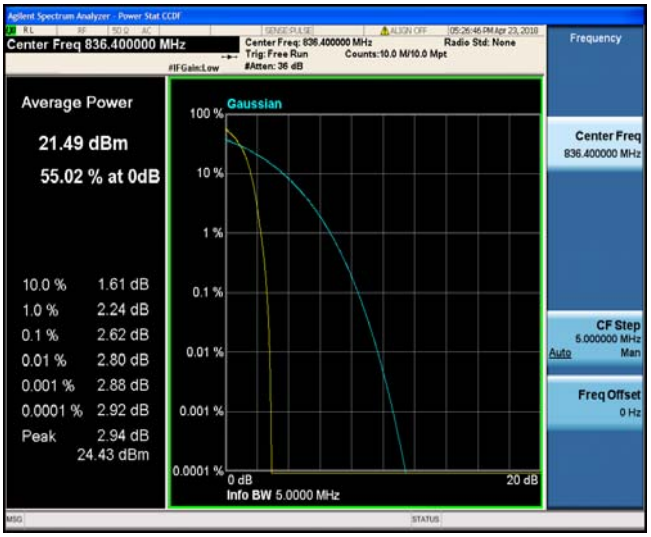

Band V_4182

Band V_4233

8.3 Appendix C: 26dB Bandwidth and Occupied Bandwidth

Test Result

Band	Channel	Occupied Bandwidth (kHz)	26dB Bandwidth (kHz)	Limit(kHz)	Verdict
Band II	9262	4219.7	4847	---	PASS
Band II	9400	4201.7	4851	---	PASS
Band II	9538	4208.2	4858	---	PASS
Band V	4132	4198.5	4855	---	PASS
Band V	4182	4205.2	4891	---	PASS
Band V	4233	4198.2	4855	---	PASS

Test Graphs

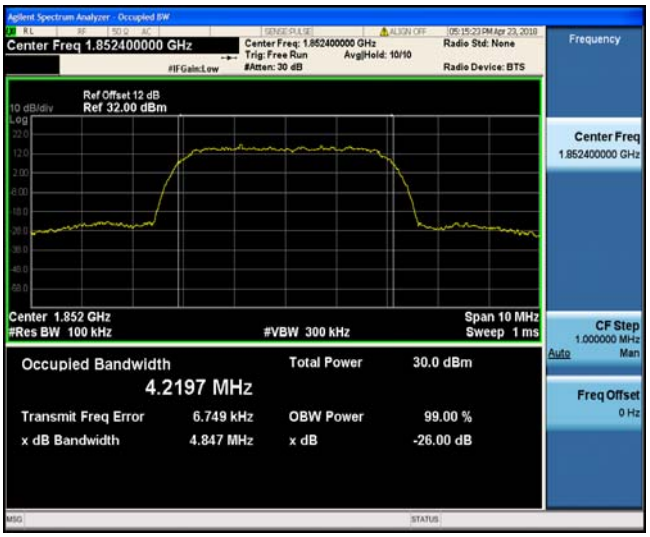

Band II_9262

Band II_9400

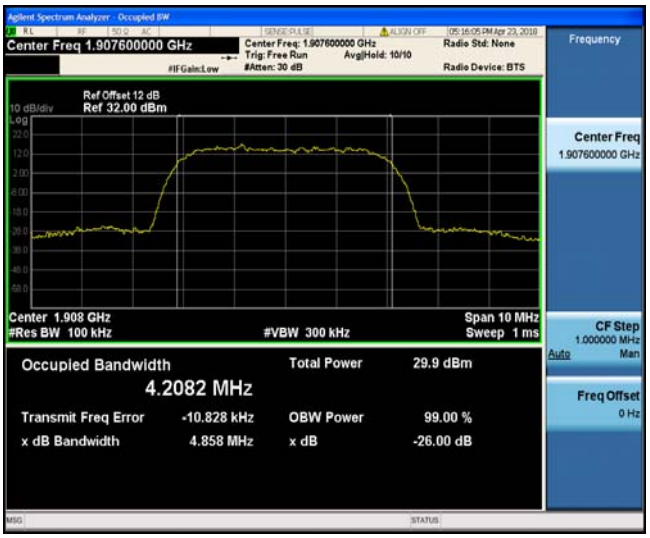

Band II_9538

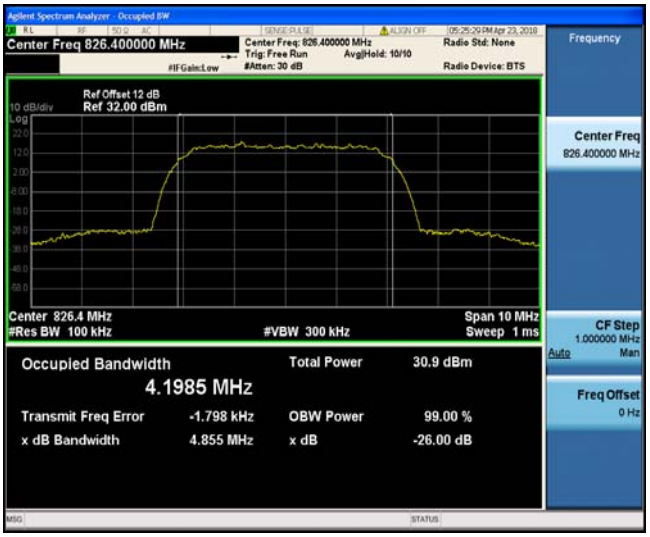

Band V_4132

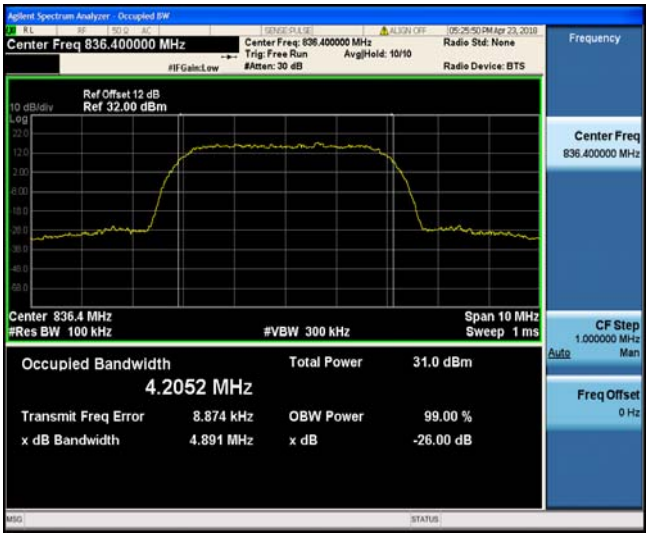

Band V_4182

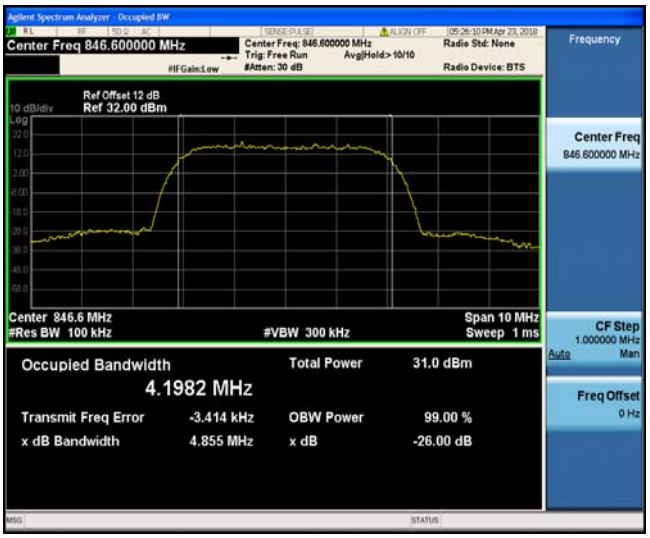

Band V_4233

8.4 Appendix D: Band Edge

Test Result

Band	Channel	Value(dBm)	Limit(dBm)	Verdict
Band II	9262	-24.03	-13	PASS
Band II	9538	-24.07	-13	PASS
Band V	4132	-25.82	-13	PASS
Band V	4233	-23.84	-13	PASS

Test Graphs

Band II_9262

Band II_9538

Band V_4132

Agilent Spectrum Analyzer - Swept SA
Center Freq 849.000000 MHz
PNO: Wide
IFGain:Low
Trig: Free Run
#Atten: 30 dB
Avg Type: RMS
Avg|Hold:> 100/100
10:00:31 AM Apr 24, 2018
Frequency
Auto Tune
Ref Offset 12 dB
10 dB/div
Ref 32.00 dBm
Log
Mkr1 849.00 MHz
-23.842 dBm
Center Freq
849.000000 MHz
Start Freq
844.000000 MHz
Stop Freq
854.000000 MHz
CF Step
1.000000 MHz
Auto
Man
Freq Offset
0 Hz
Center 849.000 MHz
#Res BW 100 kHz
#VBW 300 kHz*
Span 10.00 MHz
Sweep 1.267 ms (1001 pts)

Band V_4233

8.5 Appendix E: Conducted Spurious Emission

Test Result

Band	Channel	Frequency Rang(Mhz)	Value(dBm)	Limit(dBm)	Verdict
Band II	9262	30~1000	-38.78	-13	PASS
Band II	9262	1000~20000	-19.30	-13	PASS
Band II	9400	30~1000	-38.39	-13	PASS
Band II	9400	1000~20000	-19.80	-13	PASS
Band II	9538	30~1000	-38.80	-13	PASS
Band II	9538	1000~20000	-19.95	-13	PASS
Band V	4132	30~1000	-37.67	-13	PASS
Band V	4132	1000~20000	-19.13	-13	PASS
Band V	4182	30~1000	-38.49	-13	PASS
Band V	4182	1000~20000	-19.33	-13	PASS
Band V	4233	30~1000	-38.19	-13	PASS
Band V	4233	1000~20000	-19.49	-13	PASS

Test Graphs

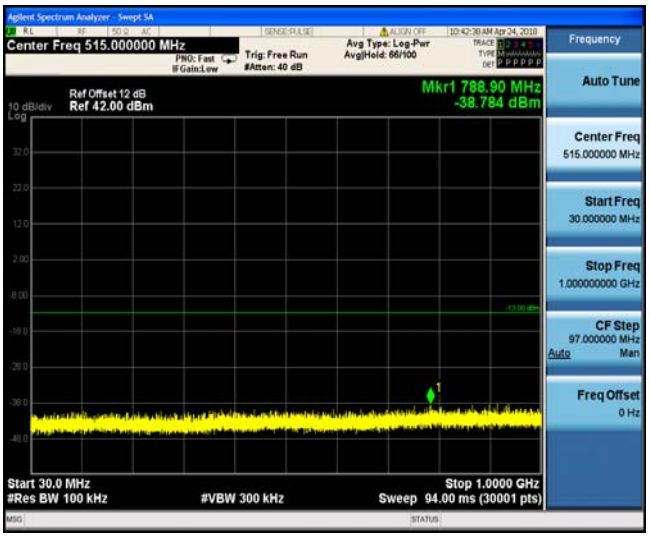

Band II_9262

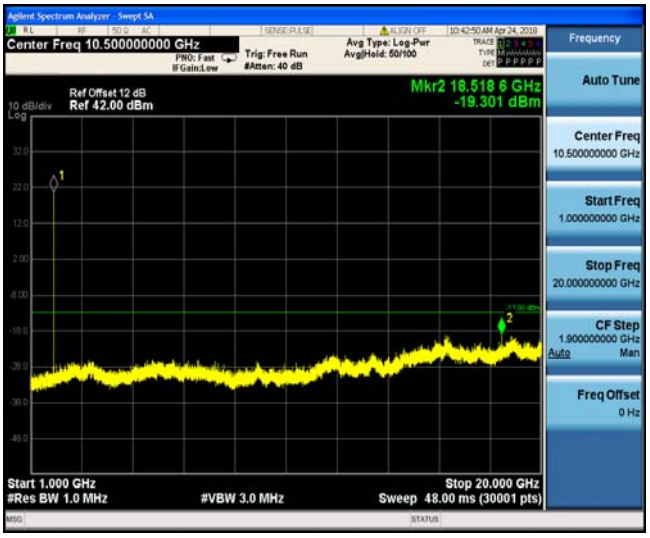

Band II_9262

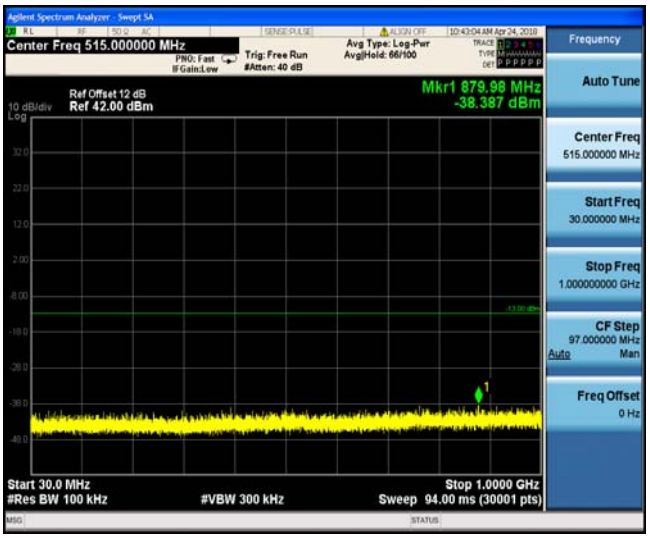

Band II_9400

Band II_9400

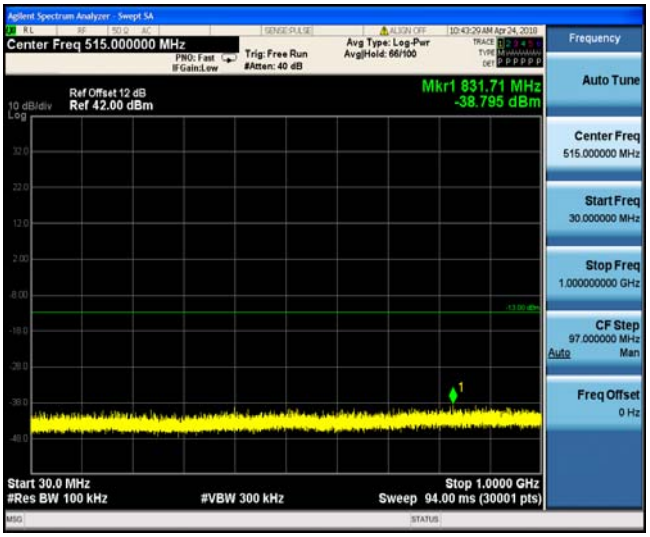

Band II_9538

Band II_9538

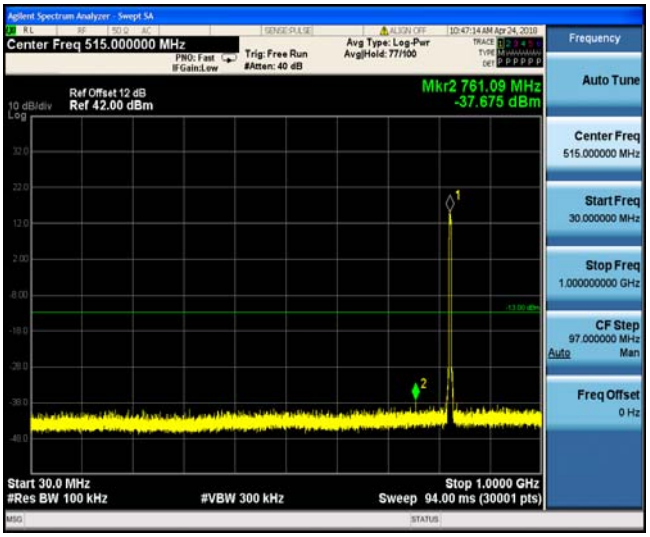

Band V_4132

Band V_4132

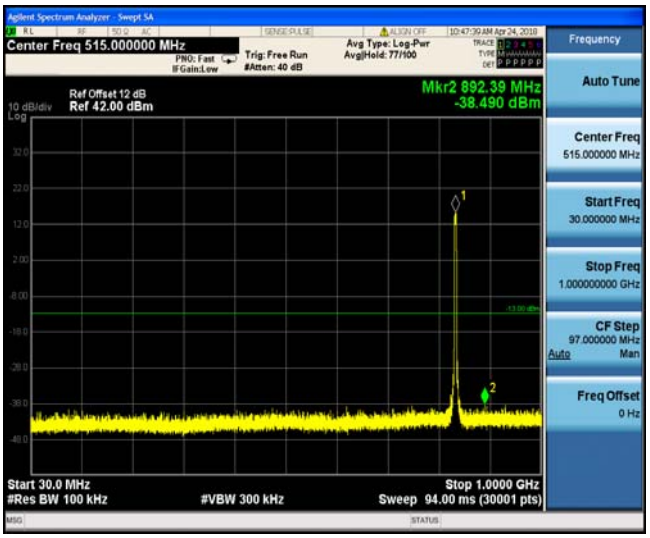

Band V_4182

Band V_4182

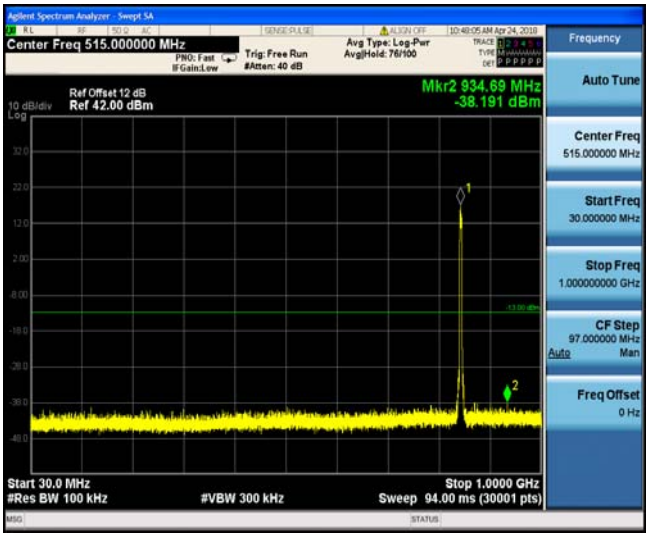

Band V_4233

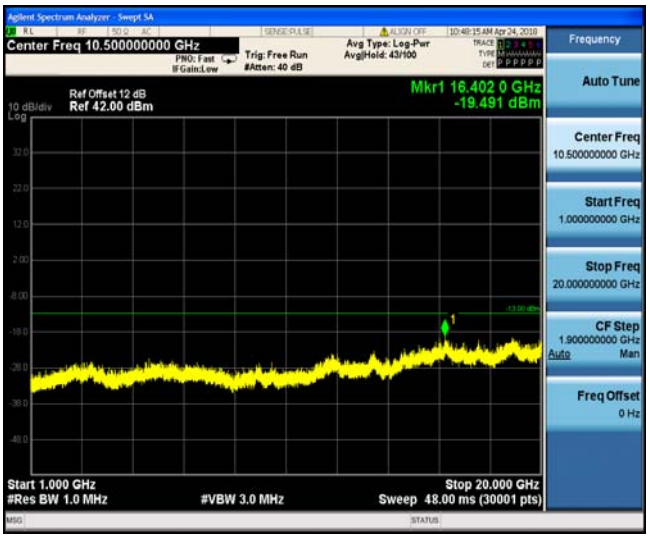

Band V_4233

8.6 Appendix F: Frequency Stability

Test Result

Voltage							
Band	Channel	Voltage (Vdc)	Temperature (℃)	Deviation (Hz)	Deviation (ppm)	Limit (ppm)	Verdict
Band II	9262	VL	TN	3.86	0.002085	2.5	PASS
Band II	9262	VN	TN	0.79	0.000425	2.5	PASS
Band II	9262	VH	TN	0.36	0.000197	2.5	PASS
Band II	9400	VL	TN	2.81	0.001495	2.5	PASS
Band II	9400	VN	TN	5.19	0.002762	2.5	PASS
Band II	9400	VH	TN	-0.43	-0.000228	2.5	PASS
Band II	9538	VL	TN	3.29	0.001725	2.5	PASS
Band II	9538	VN	TN	4.00	0.002096	2.5	PASS
Band II	9538	VH	TN	0.56	0.000292	2.5	PASS
Band V	4132	VL	TN	-1.54	-0.001869	2.5	PASS
Band V	4132	VN	TN	-1.11	-0.001342	2.5	PASS
Band V	4132	VH	TN	-1.63	-0.001973	2.5	PASS
Band V	4182	VL	TN	-0.71	-0.000847	2.5	PASS
Band V	4182	VN	TN	-0.28	-0.000334	2.5	PASS
Band V	4182	VH	TN	1.50	0.001796	2.5	PASS
Band V	4233	VL	TN	1.33	0.001571	2.5	PASS
Band V	4233	VN	TN	0.29	0.000338	2.5	PASS
Band V	4233	VH	TN	1.04	0.001225	2.5	PASS

Temperature							
Band	Channel	Voltage (Vdc)	Temperature (℃)	Deviation (Hz)	Deviation (ppm)	Limit (ppm)	Verdict
Band II	9262	VN	-30	4.28	0.002313	2.5	PASS
Band II	9262	VN	-20	3.83	0.002066	2.5	PASS
Band II	9262	VN	-10	2.48	0.001340	2.5	PASS
Band II	9262	VN	0	2.18	0.001178	2.5	PASS
Band II	9262	VN	10	1.31	0.000707	2.5	PASS
Band II	9262	VN	20	3.71	0.002000	2.5	PASS
Band II	9262	VN	30	3.06	0.001653	2.5	PASS
Band II	9262	VN	40	1.34	0.000726	2.5	PASS
Band II	9262	VN	50	6.22	0.003355	2.5	PASS
Band II	9400	VN	-30	3.93	0.002089	2.5	PASS
Band II	9400	VN	-20	2.42	0.001286	2.5	PASS
Band II	9400	VN	-10	0.24	0.000129	2.5	PASS
Band II	9400	VN	0	5.03	0.002675	2.5	PASS
Band II	9400	VN	10	2.13	0.001134	2.5	PASS
Band II	9400	VN	20	1.53	0.000814	2.5	PASS
Band II	9400	VN	30	0.51	0.000270	2.5	PASS
Band II	9400	VN	40	-1.65	-0.000879	2.5	PASS
Band II	9400	VN	50	2.70	0.001438	2.5	PASS
Band II	9538	VN	-30	3.00	0.001571	2.5	PASS
Band II	9538	VN	-20	3.78	0.001980	2.5	PASS
Band II	9538	VN	-10	0.85	0.000446	2.5	PASS
Band II	9538	VN	0	3.80	0.001991	2.5	PASS
Band II	9538	VN	10	5.19	0.002722	2.5	PASS
Band II	9538	VN	20	3.61	0.001894	2.5	PASS
Band II	9538	VN	30	6.05	0.003172	2.5	PASS
Band II	9538	VN	40	6.53	0.003423	2.5	PASS
Band II	9538	VN	50	1.28	0.000671	2.5	PASS
Band V	4132	VN	-30	1.03	0.001246	2.5	PASS
Band V	4132	VN	-20	-2.67	-0.003228	2.5	PASS
Band V	4132	VN	-10	0.16	0.000199	2.5	PASS
Band V	4132	VN	0	-0.19	-0.000225	2.5	PASS
Band V	4132	VN	10	-0.74	-0.000891	2.5	PASS
Band V	4132	VN	20	-2.72	-0.003289	2.5	PASS
Band V	4132	VN	30	-0.41	-0.000493	2.5	PASS
Band V	4132	VN	40	-1.45	-0.001757	2.5	PASS
Band V	4132	VN	50	-1.47	-0.001783	2.5	PASS
Band V	4182	VN	-30	1.32	0.001573	2.5	PASS
Band V	4182	VN	-20	-1.75	-0.002087	2.5	PASS
Band V	4182	VN	-10	1.28	0.001531	2.5	PASS
Band V	4182	VN	0	0.84	0.001001	2.5	PASS
Band V	4182	VN	10	0.25	0.000299	2.5	PASS
Band V	4182	VN	20	0.25	0.000299	2.5	PASS
Band V	4182	VN	30	-0.46	-0.000556	2.5	PASS
Band V	4182	VN	40	-0.45	-0.000539	2.5	PASS
Band V	4182	VN	50	-0.36	-0.000436	2.5	PASS
Band V	4233	VN	-30	-0.29	-0.000338	2.5	PASS
Band V	4233	VN	-20	2.57	0.003033	2.5	PASS
Band V	4233	VN	-10	2.10	0.002475	2.5	PASS

Band V	4233	VN	0	1.14	0.001343	2.5	PASS
Band V	4233	VN	10	-0.63	-0.000743	2.5	PASS
Band V	4233	VN	20	1.37	0.001622	2.5	PASS
Band V	4233	VN	30	1.05	0.001242	2.5	PASS
Band V	4233	VN	40	0.06	0.000076	2.5	PASS
Band V	4233	VN	50	-0.02	-0.000025	2.5	PASS

----------End of the Report ----------