SUSIE IV – Hybrid Charge Controller

Instruction Manual (Version 1.0)

Table of Contents

1.0 Introduction

2.0 Safety Instructions

2.1 General Safety
2.2 Installations Safety
2.3 ISP Safety

3.0 Application

4.0 Features and Specifications

4.1 Main Features
4.2 Device Protection Features
4.3 Specifications
4.4 Default Settings

5.0 Installation

5.1 Mounting the Controller
5.2 Susie VI Connectors
5.3 Connecting the Wind turbine, Solar PV, Battery and Load

6.0 Operation

6.1 LCD Display and Settings
6.2 Susie IV App

7.0 Communications

7.1 SIM Card Installation
7.2 Connecting to Susie IV via GPRS
7.3 ZigBee Networking
7.4 Internet Port Mapping
7.5 SMS Commands

8.0 Technical Specification

9.0 Recycling

10.0 Warranty Statement

1.0 Introduction

The SUSIE IV – Hybrid Charge Controller is designed to simultaneously collect wind and solar energy, converting it to stored energy by the use of a battery bank. This stored energy can be utilised for numerous off-grid applications including lighting, CCTV and air pollution monitoring etc.

The SUSIE IV – Hybrid Charge Controller includes on-board communications modules for direct connection via GPRS and controller to controller communication via ZigBee.

2.0 Safety Instructions

Please read this manual very carefully. Failure to do so may result in serious injury and permanent damage to the SUSIE IV – Hybrid Charge Controller and any attached equipment. While every attempt has been made to ensure the information contained in this guide is accurate. We advise that we will not be liable for any omissions or inaccuracies.

2.1 General Safety

Do not start installing the SUSIE IV – Hybrid Charge Controller until you fully understand all the technical details described within this manual.

Always observe the battery manufacturer's handling instructions: As failure to do so could result in an explosion or acid leak.

The installation of SUSIE IV – Hybrid Charge Controller must be carried out in accordance to local and national electrical regulations.

SUSIE IV – Hybrid Charge Controller must only be operated within the manufacturers' specification.

2.2 Installation Safety

- Do not allow the unit to be exposed to moisture, rain or other liquids.
- Protect the unit from direct sun and excess heat.
- The ventilation openings must not be covered.
- Ensure the unit is protected from unauthorised access (including children).
- Ensure all components are rated at the same voltage i.e. if you have a turbine rated at 12 volts, the solar panel and battery should also be rated at 12 volts. The same applies for 24 volt systems.
- Ensure the total wattage of the unit is not exceeded the TOTAL input with the ideal mix being 1500 watt turbine and 500 watt solar.
- Ensure all connections are firmly tightened.
- Select suitably wire sizes for the currents being generated.
- Please ensure the unit is connected to Earth before connecting wind turbine or PV panels.
- Please ensure the unit is connected to dump load resistance before connecting the wind turbine.

2.3 ISP (Independent Smart Pole) Safety

When installing SUSIE IV – Hybrid Charge Controller within the Airsynergy ISP, please follow the installations and safety instructions within the ISP installation manual.

Note: The ISP is a 24V system.

3.0 Application

The SUSIE IV – Hybrid Charge Controller is designed to charge Lead Acid or Lithium Ion batteries by the use of wind turbine (WT) and photovoltaic (PV) sources simultaneously. The battery type must be set by the controller, before the batteries are connected to the system. No other types of charging sources should be connected to the controller.

The SUSIE IV – Hybrid Charge Controller must be installed within a metal enclosure of IP rating (IP??). In the case of installing SUSIE IV within the Airsynergy IPS pole, the pole itself considered to be an enclosure of suitable specifications.

The SUSIE IV – Hybrid Charge Controller must only be operated within the manufacturer's specification. The manufacturer will accept no liability when the device is used in a mode outside the stated specification. Ensure that all ancillary components (e.g. Wind Turbine, PV Cell, Battery, etc.) are installed using their manufactures' manuals and that all wiring is appropriately sized.

4.0 Features and Specifications

4.1 Main Features

- LCD display with user input keys
- Susie IV Application with PC interface for remote access monitoring and set-up
- Dual wind turbine (WT) and solar (PV) connection (1500W (WT) and 500W (PV) max)
- Auto sensing of battery connection (via voltage)
- A "Load" output where external devices can be switched on and off at user determined voltages.
- Wind generation optimisation (via MPPT curve configuration)
- State of Charge Indicator
- The unit will store information such as:
  - Total amps generated
  - Total kW hours generated
  - Amps used by load
  - And many more
- Access by GPRS wireless connection
- Access and monitor other controllers via automatic ZIGBEE network.
- Access by Network cable
- Manual Brake
- Lighting switching by time, sunrise, sunset or ambient light level
- Light dimming control (e.g. Load control by PWM or 0-10V)
- Motion sensor input support

4.2 Device Protection Features

- Automatic braking of the turbine when battery fully charged.
- Automatic braking of the turbine when charge current is too high i.e. in very high winds
- Manual brake switch, also have remote brake interface.
- On-board battery maintenance preventing overcharging and over discharging.
- The "load" output is current limited to protect the connected device

4.3 Specifications

	Susie IV	ISP-Street light	UL Limits*
Battery Voltage	12V / 24V	24V	12V / 24V
Wind Power	1500W max	300W	300W max
PMG Voltage	150V	150V	150V
Charge Current Wind	40A	40A	40A
PV Power	500W max	500W max	500W max
Charge Current Solar PV	20A	20A	20A
Load Output	500Wmax	160Wmax	160Wmax
Temperature Range	-10C to 40C (4F to 104F)	-10C to 40C (4F to 104F)	-10C to 40C (4F to 104F)

*When UL is a requirement for the installation the UL limits must be followed

4.4 Default Settings

	12 Volt Battery	24 Volt Battery
Charge Off	14.4 Volts	28.8 Volts
Float Charge	13.8 Volts	27.6 Volts
User Off	10.5 Volts	21.0 Volts
User On	12.6 Volts	25.2 Volts
Brake Voltage	200 Volts	200 Volts
Brake Current	20.0 Amps	20.0 Amps

5.0 Installation

For installations of the SUSIE IV – Hybrid Charge Controller into the Airsynergy ISP Streetlight, please refer to the ISP manual for the installation procedure.

5.1 Mounting the controller

Do not install the controller outside, it must be mounted within a **metal** enclosure of IP57 or better in all situations. The controller should be mounted using the location points at the rear, highlighted by the **green** arrows, and the location fixing point highlighted by the **black** arrow. The ventilation louvres highlighted by the **blue** arrows must not be covered.

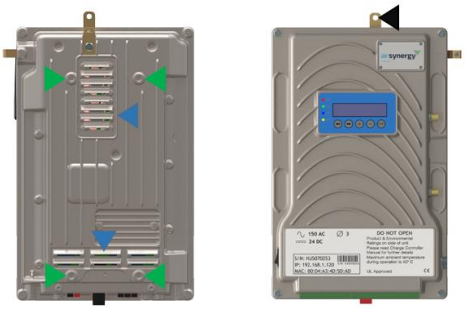

Figure 1: Susie IV mounting positions Rear and Front

The battery cable should be no longer than 2m (6.5ft) in order to minimise losses and be of 6AWG (13.3mm^2)

5.2 Susie IV Connectors

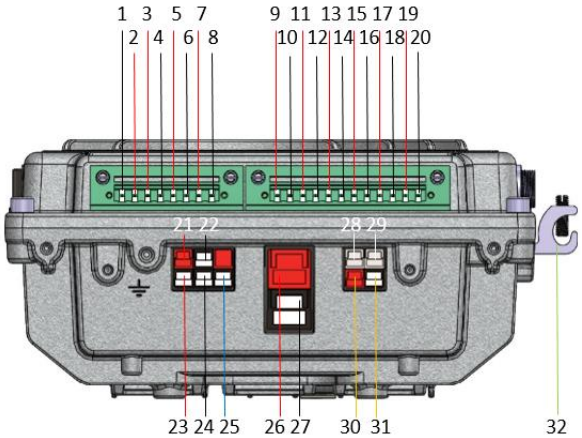

Figure 2: Underside Connections

	Name	Line Type		Name	Line Type
1	Motion Sensor IN -	1 – 2.5 mm^2	17	Digital Output 1 +	1 – 2.5 mm^2
2	Motion Sensor IN +	1 – 2.5 mm^2	18	Digital Output 1 -	1 – 2.5 mm^2
3	Motion Sensor OUT+	1 – 2.5 mm^2	19	Digital Output 2 +	1 – 2.5 mm^2
4	Motion Sensor OUT -	1 – 2.5 mm^2	20	Digital Output 2 -	1 – 2.5 mm^2
5	Dimming OUT +	1 – 2.5 mm^2	21	Load +	PA45
6	Dimming OUT -	1 – 2.5 mm^2	22	Load -	PA45
7	Wind Speed Sensor +	1 – 2.5 mm^2	23	Wind Generator (AC1)	PA45
8	Wind Speed Sensor -	1 – 2.5 mm^2	24	Wind Generator (AC2)	PA45
9	Wind Direction Sensor +	1 – 2.5 mm^2	25	Wind Generator (AC3)	PA45
10	Wind Direction Sensor -	1 – 2.5 mm^2	26	Battery +	PA75
11	Solar Irradiation Sensor +	1 – 2.5 mm^2	27	Battery -	PA75
12	Solar Irradiation Sensor -	1 – 2.5 mm^2	28	Dump Load Resistor +	PA45
13	Digital Input 1 +	1 – 2.5 mm^2	29	Dump Load Resistor -	PA45
14	Digital Input 1 -	1 – 2.5 mm^2	30	Solar PV +	PA45
15	Digital Input 2 +	1 – 2.5 mm^2	31	Solar PV -	PA45
16	Digital Input 2 -	1 – 2.5 mm^2	32	Earth/Ground (100mm^2)	AWG7

Table 1: Susie IV Underside Connections

Connection Sequence to the Susie IV controller

i) Connect the Battery First (Important for Safety)
ii) Connect the Dump Load Resistor (Important for Safety)
iii) Connect the Solar PV Panels
iv) Connect the Wind Turbine
v) Connect the Load (e.g. LED Lighting Fixture)
vi) Connect the Earth to ground BEFORE powering up (Important for Safety)

If you do not follow the correct sequence the system may not work properly and the battery could be damaged. A spinning generator (PMG) can produce power even when **not** connected to the controller. Therefore it is commended that the PMG is prevented from spinning during installation. Solar PV panels can also produce power when light is incident on them, it is recommend that the panels be covered during installation. These measures will reduce the risk of creating sparks.

5.3 Connecting the Wind turbine, Solar PV, Battery and Load

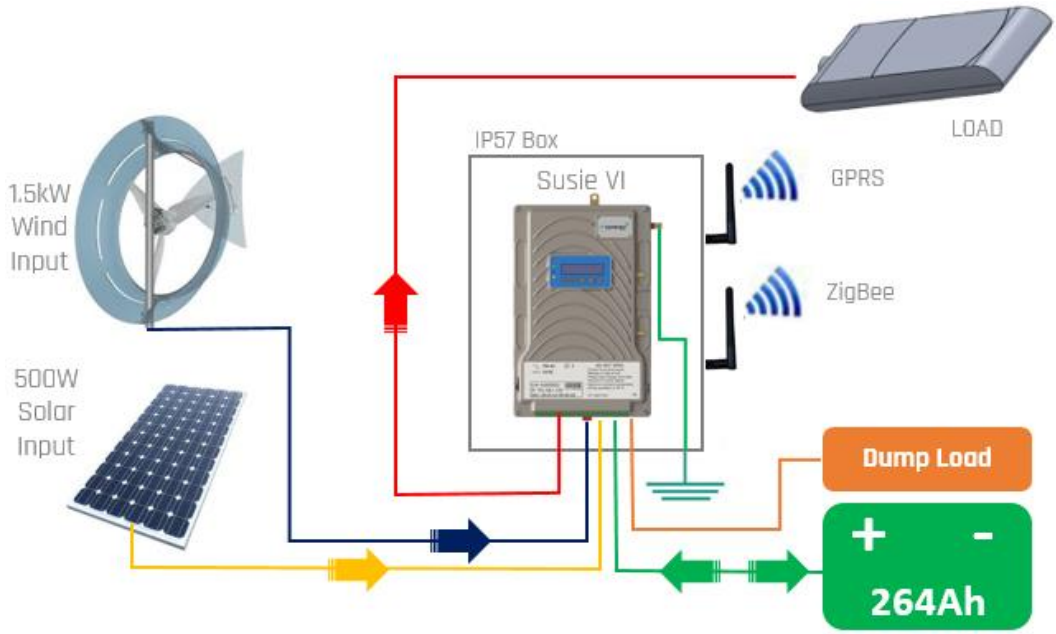

Figure 3: Susie IV Installation Schematic

Appropriate switch gear should be selected in order to isolate any of the components from the set-up for maintenance proposes. All components should be grounded in accordance with local regulations.

6.0 Operation

6.1 LCD Display and Settings

- Use the forward and backward arrow keys to scroll through the menu
- Use the + and – keys to alter the settings as required
- Use the RESET key to restart the unit
- BRAKE Indicator LED: MANUAL BRAKE IS ON
- LOAD Indicator LED:
- LAMP Indicator LED: LAMP WIRING IS OPEN CIRCUIT
- EMPTY Indicator LED: BATTERY CHARGE IS LOW

Figure 4: LCD Display

HJ161012 192.168.1.120	C Self: 0 Nwk ID: 27514
1 - Device Name and IP Address	2 - Device ID and Network ID
FW Ver: 1.00 Z: 1.00M: 1.00	Battery U 25.60V TP 25C I 7.28A
3 - Firmware Versions: Controller, ZigBee and Main board	4 – Battery Voltage, Temperature, Charge Current
Charge off 28.80V + 0 V	Brake voltage: 200.00V
5 - Set charge off voltage, display Temperature compensation voltage. Press "+" or "-" to set the value	6 - Set brake voltage. Default value is 200V
Battery capacity rated 200.00AH	Battery capacity curr: 168.45AH
7 - Set battery rated capacity (Ah). The charge and discharge control are not to be used as reference, only for calculating the percentage of current battery power for your reference.	8 - Battery capacity. It will update the current battery power according to charge and discharge value. When battery power is lower than load cut-off power, if the setting of load cut off according to power is active, the load will be cut off; if this setting is not valid, the load will not be cut off.
Battery capacity load off120.00AH	G: 124rpm 228.6W 57.60V 6.80A
9 - Set battery load off capacity. When the battery current level is below this value, if the battery power control load switch setting is active, the load will be cut off.	10 - Display the current wind generator speed and power, voltage and charging current
Gen 8.31Ah 0.320kwh	Solar: 78.4 W 25.60 V 3.12 A
11 - Display the accumulating wind generator charging Ah and kWh value.	12 - Display the power of solar panel, voltage and charging current
Load current 2.76 A	Load 22.38Ah 0.528kwh
13 - Load discharge current.	14 - Load discharge Ah and kWh value
Gateway 192.168.1.1	Subnet Mask 255.255.0.0
15 - Current gateway address	16 - Subnet mask
Primary DNS 192.168.1.1	Secondary DNS 192.168.1.1
17 - Primary DNS address	18 - Secondary DNS address
Date time:(s) 20161014 10:3826	GPRS PORT: 15000 59. 40.235.119
19 - The current time. "s" is summer time	20 - Set the IP address and port that GPRS connected. Please set referring to the following GPRS connection and setting

Table 2: Settings

6.2 Susie IV App

The Susie IV App allows the user to remotely monitor the performance and set-up the parameters within the controller.

Features:

- Live Dashboard giving the device current status
- Device Information: Including Nome and IP address
- Battery Settings
- Wind Generator Settings: Including MPPT setup
- Solar PV Setting
- Load Settings: Including Dimming Function and Timings
- Time Settings: Including Time Zone and Location

In order to connect to SUSIE IV via the SUSIE IV App, the software must be installed on a PC and the controller must be configured in order to communicate with the controller, refer to section 7 of this manual for further information.

Figure 5 – Susie IV App – Listening Symbol, Connected Status

Open the Susie IV App, and click on Listening symbol, the software will connect to the co-ordinator unit, usually within 1 minute. If the connection is successfully, a "Connected" status with be shown at the bottom of the window. The device list will also appear in the list box. If not, please click the "Refresh" button to re-connect.

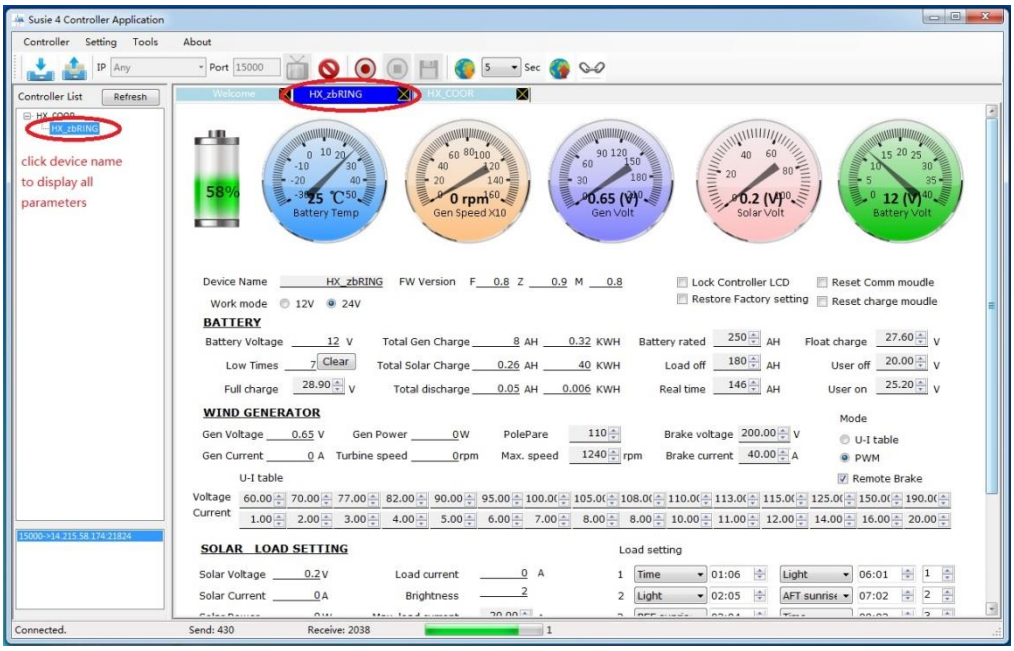

Figure 6 – Susie IV App – Device Status

When a connection has been established, click on any device name, the application will load the device information on the main window. This information indicate the live status of the unit. The default auto-refresh time is 5 seconds, this can be changed from the selection box.

The data display interface also allows the user to change values with a given field. When a parameter is modified the text colour will change to red. The user can them upload this modification to the controller by clicking the "Upload" button. When complete the text colour will revert back to black. Please press the refresh button to confirm the update is complete. Because of GPRS transfer delay, the update typically need 3-7 seconds.

When you no longer need to monitor the device, you can click on the X (Close) symbol on the device information page. The page will close and data will no longer be read from the device.

7.0 Communications

7.1 SIM Card Installation (Co-ordinator Mode)

In order to remotely communicate to the SUSIE IV – Hybrid Charge Controller a SIM card needs to be inserted into the SIM card slot located under the Airsynergy name plate on the front face of the unit.

Figure 7: SIM Card Slot, located under the Airsynergy name plate

7.2 Connecting to Susie IV via GPRS (Co-ordinator Mode)

Run Susie IV App, the software interface is shown below:

Figure 8: Connecting to Susie IV via GPRS

The Susie IV device (Co-ordinator Mode) is a client, it connects to the PC software via GPRS.

Before a connection can be made, the following steps need to be taken. Set the controller's server IP address and port. The user needs to set the controller's target server IP address and port. The GPRS will connect if the server is listening. The controller will connect to the server, then began data communications.

The IP address can be set in two ways:

1: Using the Controller Keys Pad
After the controller is powered on, press the Backward Arrow key, confirm the device type is set up as a Co-ordinator (LCD Screen: C Self: 0, Nwk ID: 27514), continue to press the Backward Arrow key until LCD shows the GPRS Set-up Screen:

Co-ordinator Confirmation Screen

Figure 9: GPRS Set-up Screen

Press OK button for 3 seconds, a cursor will appear under the first digit of 16000, press + or – to change the value. Press **OK** to edit next bit until the IP address and Port match the target IP address and Port.
Note the controller will need to be restarted for the changes to take effect.

2: Using SMS messaging
To change the IP Address
Send SMS text "123456ip = xxx.xxx.xxx.xxx" to the SIM card number, where xxx.xxx.xxx.xxx represents the target IP Address.
You will receive a reply stating "Success changed :)": If the change has been successful.

To change the Port
Send SMS to GPRS "123456pt = xxxxx" to the SIM card number, where xxxxx represents the target Port.
You will receive a reply stating "Success changed :)": If the change has been successful.

7.3 ZigBee Networking

In order to set-up a Zigbee Network one Susie IV is needed to act as a co-ordination the other units can be set as routers. The routers can communicate directly with the co-ordinator or indirectly via another router (depending on set-up configuration).

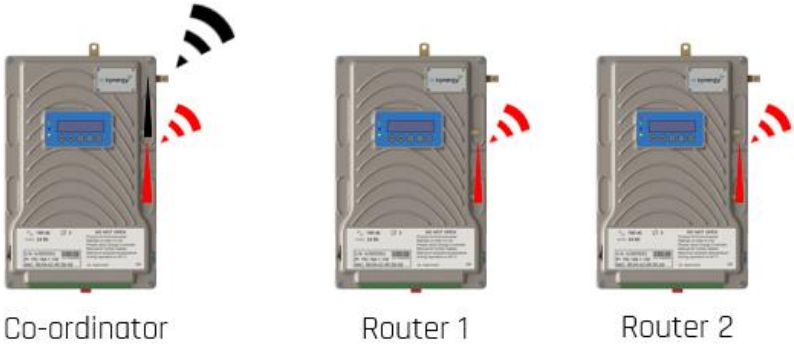

Figure 10: ZigBee Network: ZigBee Comms Network in RED, GPRS in BLACK

Typically the ZigBee network communication set-up will be completed after 6 seconds, after the system configuration has been set. Press the Back Arrow once on the Co-ordinator, the ZigBee ID will be display as shown below:

Figure 11: ZigBee Network ID

The number 0 is Co-ordinator default ID, number 27514 is the ZigBee network default ID. To avoid conflicts with other ZigBee networks, if the network ID is 27515 or 27516 etc., it means the network ID 27514 is used by other coordinator. Need to check and reset the coordinator, otherwise the Router will not connect successfully.

Press MENU on Router LCD, the LCD display below:

Figure12: Router ID

The letter "R" means that the devices is in Router Mode. The number 34616 is router default ID, the device ID is automatically generated it is different for each device. 0 indicates the parent device is co-ordinator. If the parent device is another router, the Parent ID should be the router ID.

7.4 Internet Port Mapping

If your PC connects to internet via dial-up or direct connection, the IP address is the PC's network connection IP Address, the port must be set to the same as the co-ordinator unit. The recommended setting is 15,000.

If your PC is connected to internet via LAN, you will need to set GPRS server IP address to the router IP address, and you will also need map the port on your router. Depending on the type of the router, this is usually achieved through the router menu via forwarding rules, or virtual server settings.

The external network port should be coordinated with the port on the GPRS setting. The internal port needs to be the same with the Susie4App software port settings. It is recommend to set the both port to 15000. (Please refer to the screenshot below). Sorry for no English version)

Figure 13 – External Network Port Set-up

7.5 SMS Commands

Send SMS commands to the SIM card number. The examples below use password 123456

Command	Function	Comment
reset pwd	Reset Password	Changes password to default: 123456
123456reboot	Reboot GPRS/ZigBee	Reboots the communications modules
12356pwd=******	Change Password (Case Sensitive)	Changes the password to your choice "**********" *SMS Reply "Successful Change ☺"*
123456ip=xxx.xxx.xxx.xxx	Change IP Address	Changes the IP Address to your choice. "**xxx.xxx.xxx.xxx**" *SMS Reply "Successful Change ☺"*
123456pt=xxxxx	Change PORT	Changes the Port to your choice. "**xxxxx**" *SMS Reply "Successful Change ☺"*
123456ip?	Query IP	Returns the current IP setting
123456pt?	Query PORT	Returns the current PORT setting

Table 3: SMS Commands

8.0 Technical Information

SUSIE IV	#	Information
	1	Display Screen, Touch Keys and Indicators
	2	Manual Brake
	3	Sim Card Cover
	4	GPRS Antenna Connection
	5	ZigBee Antenna Connection
	6	Auxiliary Power Port
	Mass	???kg / ???lbs
	Dimensions	348mm x 228mm x 109mm 13.7" x 9.0" x 4.2"
	Mounting	Within a Metal Enclosure (IP57) or ISP Pole
	Casing	Cast Aluminium

Table 4: Technical Specifications

9.0 Recycling

The Susie IV – Hybrid Charge Controller has been designed to be fully recyclable at end of life. Plastic components have been kept to a minimum and only used when absolutely necessary, the product can be easily disassembled and separated into its various components. All electrical printed circuit boards should be recycled in accordance to local and national requirements.

Susie IV	#	Material
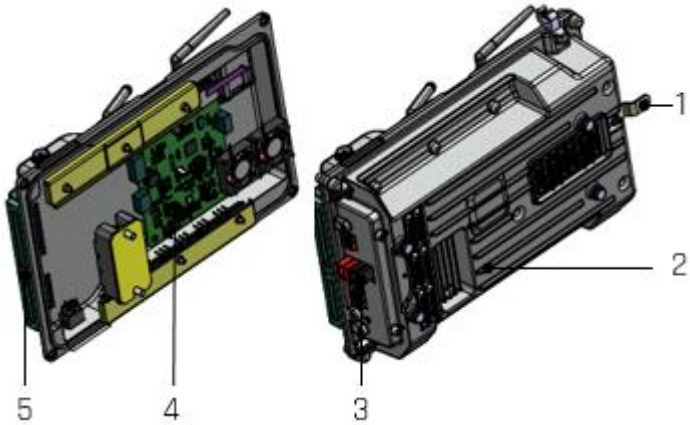	1	Steel
	2	Aluminium
	3	Polycarbonate
	4	PCB Boards
	5	Polycarbonate
	Other	Copper, Rubber
	Note	All materials with the Controller are UL approved

Table 5: Susie IV – Material Breakdown (Major Components Only)

10.0 Warranty

FCC STATEMENT :

1. This device complies with part 15 of the FCC Rules. Operation is subject to the condition that this device does not cause harmful interference.

Warning: Changes or modifications not expressly approved by the party responsible for compliance could void the user's authority to operate the equipment.

NOTE: This equipment has been tested and found to comply with the limits for a Class B digital device, pursuant to Part 15 of the FCC Rules. These limits are designed to provide reasonable protection against harmful interference in a residential installation. This equipment generates uses and can radiate radio frequency energy and, if not installed and used in accordance with the instructions, may cause harmful interference to radio communications. However, there is no guarantee that interference will not occur in a particular installation. If this equipment does cause harmful interference to radio or television reception, which can be determined by turning the equipment off and on, the user is encouraged to try to correct the interference by one or more of the following measures:

Reorient or relocate the receiving antenna.

Increase the separation between the equipment and receiver.

Connect the equipment into an outlet on a circuit different from that to which the receiver is connected.

Consult the dealer or an experienced radio/TV technician for help.

FCC Radiation Exposure Statement:

This equipment complies with FCC radiation exposure limits set forth for an uncontrolled environment. This equipment should be installed and operated with minimum distance 20cm between the radiator & your body.