Parking Brake Arm

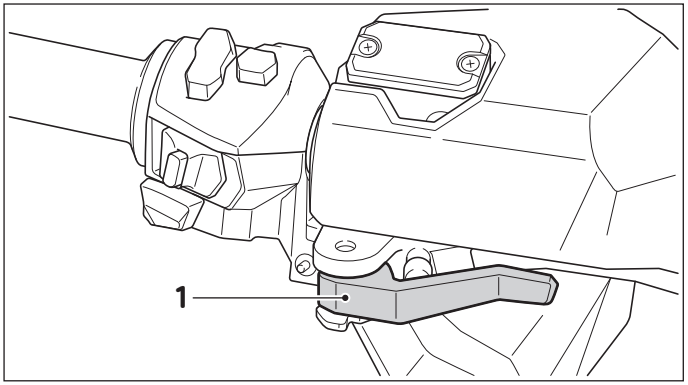

1: Parking Brake Arm

This vehicle is provided with a Parking Brake Arm for locking up the rear tire, so as to prevent accident caused by rear tire movement when parking the vehicle on a slope.

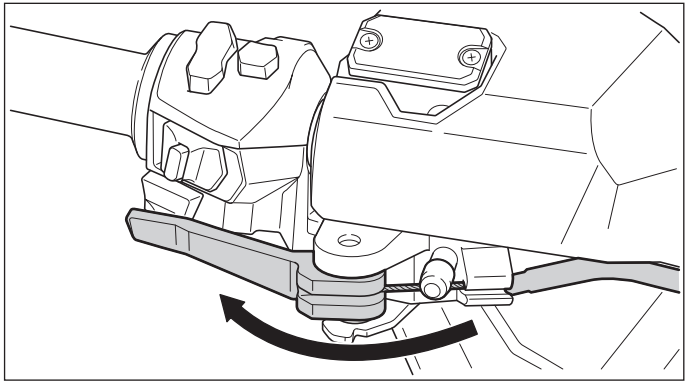

Turn Parking Brake Arm to the left and click into lock position. To unlock, just turn Parking Brake Arm back to its original position (on the right).

⚠ WARNING

- **Never use the Parking Brake Arm while riding the vehicle, or loss of control of the scooter and an accident may occur. Make sure the vehicle is fully stopped before using this Parking Brake Arm.**
- **When using the Parking Brake Arm, verify if rear tire is truly stopped from moving.**
- **Before riding your scooter, verify if the Parking Brake Arm is released, otherwise output power may be affected and the Parking Brake may be damaged.**

KYMCO
AK 550
The Thrills of Touring
Owner's Manual

FCC Statement:

This device complies with part 15 of the FCC Rules. Operation is subject to the following two conditions:

(1) This device may not cause harmful interference, and

(2) this device must accept any interference received, including interference that may cause undesired operation.

Attention

This equipment has been tested and found to comply with the limits for a Class B digital device, pursuant to part 15 of the FCC Rules. These limits are designed to provide reasonable protection against harmful interference in a residential installation.

This equipment generates, uses and can radiate radio frequency energy and, if not installed and used in accordance with the instructions, may cause harmful interference to radio communications. However, there is no guarantee that interference will not occur in a particular installation.

If this equipment does cause harmful interference to radio or television reception, which can be determined by turning the equipment off and on, the user is encouraged to try to correct the interference by one or more of the following measures:

—Reorient or relocate the receiving antenna.

—Increase the separation between the equipment and receiver.

—Connect the equipment into an outlet on a circuit different from that to which the receiver is connected.

—Consult the dealer or an experienced radio/TV technician for help.

Changes or modifications not expressly approved by the party responsible for compliance could void the user’s authority to operate the equipment.

Dear User,

Thank you very much for purchasing our AK 550 Series product.
This Manual gives detailed instructions on how to operate, maintain and adjust the AK 550 Series for prolonged durability and comfort. This model of vehicles complies with EPA regulations on scooter emission control standards, therefore complying environmental requirements in terms of low pollution, low noise and low energy consumption. Although having exceptional quality, regular maintenance is still essential for keeping the product in giving optimal performances.
In order to enjoy a safe and comfortable journey with your motorcycle, please read this manual thoroughly.

Contents

1 Precautions on Safe Driving 5

2 Owner Information 8

ID Number Record Field.....8

3 Parts Names 10

Left View of Scooter..... 10

Right View of Scooter.....11

Dashboard and Control Mechanism 12

4 Control Functions of Mechanism 13

LED Dashboard Function 13

LED Dashboard - Adjustment Zone.....13

LED Dashboard - Display Zone 15

To access the noodoe system.....17

noodoe Function.....17

KEYLESS Remote Control 24

KEYLESS Sensing distance 26

KEYLESS Main Switch..... 26

Right Handlebar Switch..... 29

Left Handlebar Switch 32

Rear Brake Lever 35

Front Brake Lever..... 35

Parking Brake Arm 36

Helmet Hook..... 37

Luggage Box..... 37

Windshield 39

Back Mirror.....41

USB Power Socket 42

Rider Backrest..... 43

Main Stand.....44

Side Stand..... 45

Fuel Tank Decorative Cover/ Fuel Inlet Cover..... 45

TPMS, Electronic Tire Pressure Sensor 46

ABS (Anti-lock Braking System)..... 50

O_2 Sensor 52

Muffler and Catalytic Converter 52

Exhaust Control System..... 53

5 Proper Riding Method..... 54

Starting the Engine..... 54

Proper Riding Method 56

Brakes..... 58

6 Checks before Riding..... 62

Keep a good habit to perform checks before riding 62

Engine Oil and Oil Filter..... 62

Check/Replenish Engine Oil..... 62

Check/Replenish the Fuel 63

Check Steering Stem..... 64

Contents

Check and Adjust Brakes 64
Checking Front Brake Fluid 65
Replenishing Front Brake Fluid 65
Check Front/Rear Brake Lining 66
Check Tires 66
Check Brake Light 67
Check the Tail Light 68
Check the Winkers 68
Check the Winkers 69
Check Front/Rear Cushion 70
Side Stand 71

7 Simplified Maintenance and Repair 72
Regular Checks 72
Check Battery 74
Air Cleaner Element 77
CVT Transmission System Filter Wool 78
Change Oil 79
Spark Plug Check and Adjustment 82
Check Coolant 83

8 Specifications 86
AK 550 – SAA1AA 86

NOTE

The actual product shall prevail if any content in this manual differs from the actual product.

Precautions on Safe Driving

Peruse user manual and precautions.

- Driver shall wear a helmet, gloves, goggles, etc.
- Do not wear clothes that may impede safe driving.
- Excessively wide and loose sleeves may be caught by the brake lever and is extremely dangerous.
- Operation of brake lever shall in no case be obstructed.
- Daily and regular checks are necessities.
- Visually check tire appearance for any foreign object or unusual abrasion.
- Exhaust gas from the muffler contains carbon monoxide which is harmful to human body.
- Start the engine only in a well ventilated location.
- Buckle up the chin-belt when wearing a Helmet.
- Hold the Handlebar with both hands when riding. Do not ride with one hand as this is extremely dangerous.
- Wearing flat shoes is safer.

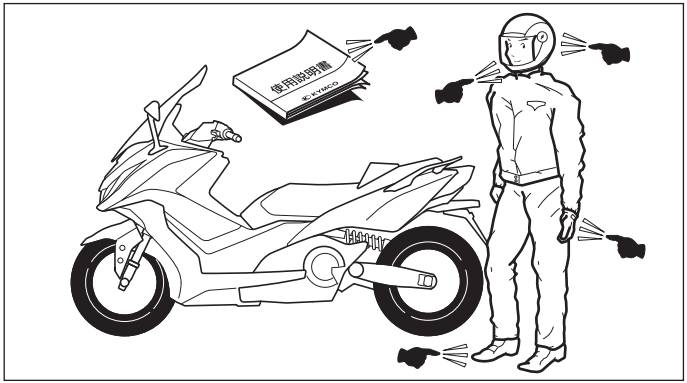

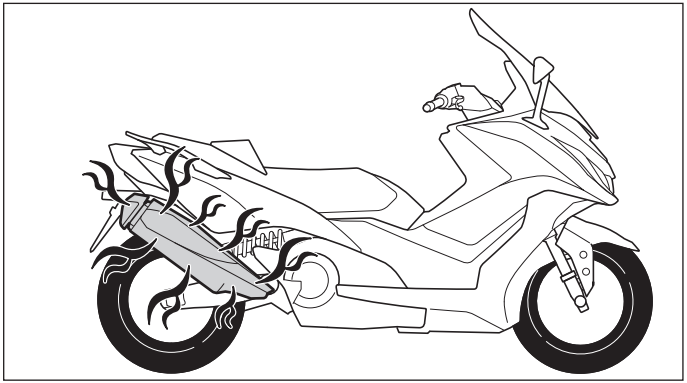

- The muffler is at a very high temperature after stopping the running engine, do not touch it.
- Avoid dry grasses or flammables when parking the scooter, for the prevention of fire risks.
- The muffler is at a very high temperature after stopping the engine; park the vehicle with the Muffler facing a wall or a location free of pedestrian, for preventing any hazard of burn.
- Metal or plastic parts of the scooter may reach a very high temperature after exposing to sunshine; care shall be taken not to touch such surfaces or a burn may occur.
- Avoid making sharp turns or one-handed driving.
- Abide by all traffic rules.
- Smoking is prohibited when replenishing fuel.
- Shutdown the engine when replenishing fuel.

- When mounting/dismounting the scooter, special care must be taken by the rear rider to prevent being burnt by the high-temp Exhaust Muffler.
- Operability of the handle varies in conditions with or without an extra load.
- When riding the motorcycle, the rider must place both feet on the pedals; the rear rider shall put their arms around the rider's waist and both feet on the rear pedals.

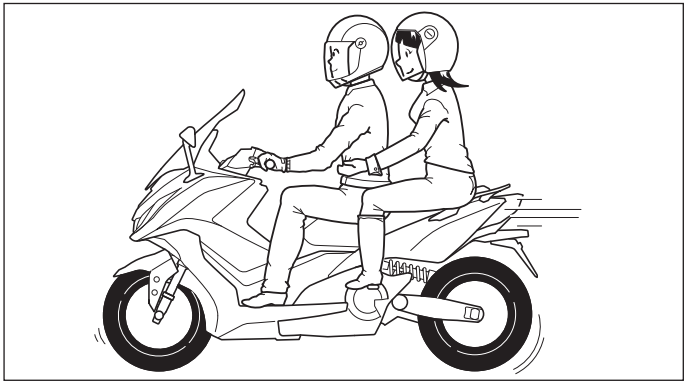

- Avoid overloading when carrying objects. Make sure that objects are fixed properly. Extra care must be taken for safe driving.
- Vehicle functionalities are related to its structure; arbitrary modification may deteriorate operability of vehicle, causing shortened service life and obstructed driver safety.
- Arbitrary modification of a vehicle is an illegal action forbidden by law. Never try to make any modification.
- Modification of vehicle may result in a nullified warrant.

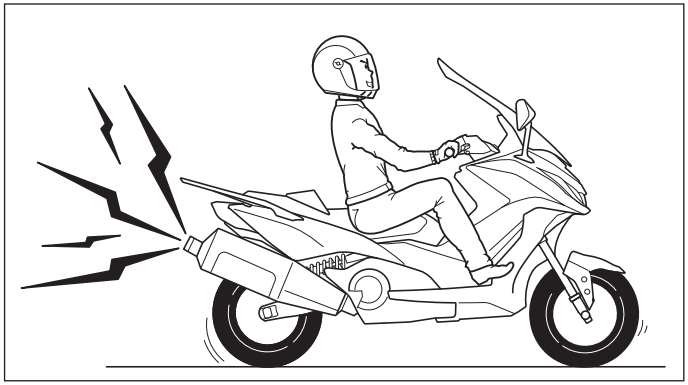

Attention

- **Natural mental relaxation and comfortable clothes are essentials to a safe driving.**
- **Abide by traffic rules, avoid anxiety, relax your mood, and pay attention to drive.**
- **Avoid wearing clothes that may impede driving safety when riding the scooter. (E.g., long skirt, flared trousers, etc.)**
- **The temperature of the Muffler is extremely high when the vehicle is running as well as within 30 minutes after stopping of driving; avoid contacting the vehicle with the body or skin to avoid burn injuries.**
- **Avoid dry grasses or flammables when parking the vehicle, for the prevention of fire risks.**

The Front Inner Box has a capacity of holding no more than 1.3 kg.
The Luggage Box has a capacity of holding no more than 10 kg.

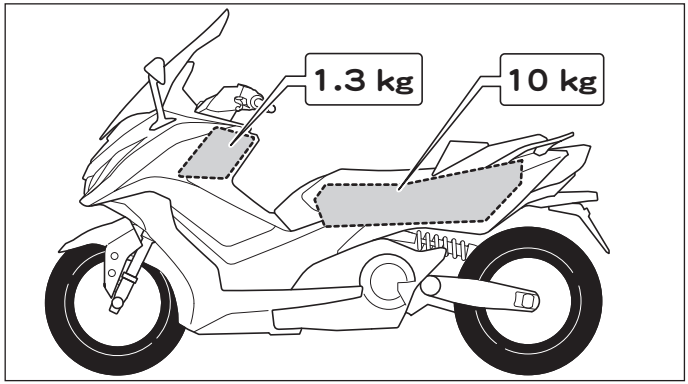

Do Not exceed the following load limits:

The Front Inner Box has a capacity of holding no more than

1.3 kg

The Luggage Box has a capacity of holding no more than

10 kg

It is forbidden to install a carrying basket or bracket on the front header. Carrying anything in front of the vehicle will surly block the headlight and significantly affect driving safety.

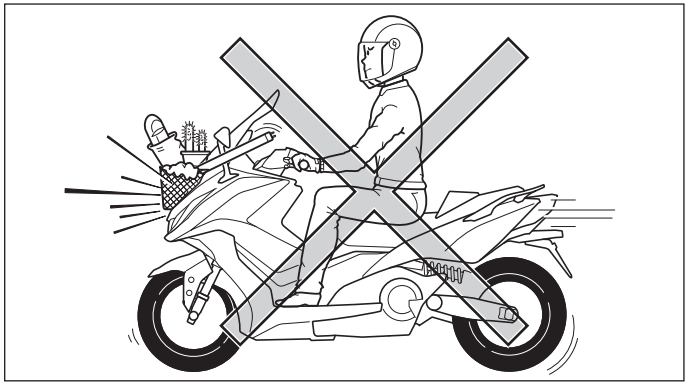

Owner Information

ID Number Record Field

Please note down the Engine Number and Vehicle Frame Number in the relevant fields below, to facilitate ordering spare parts from a KYMCO dealer, or for reference in the event of a lost of vehicle.

ID Number Record Field:

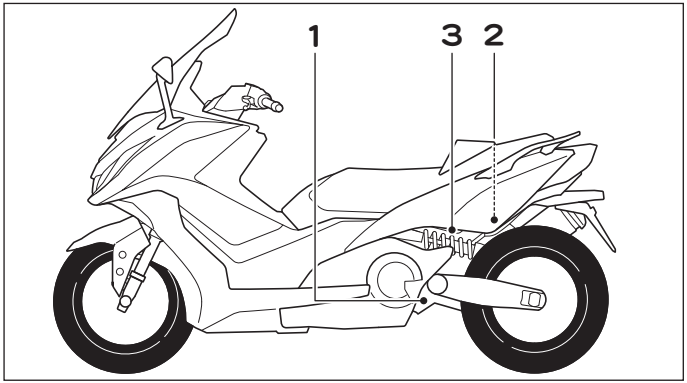

1: Engine Number engrave
2: Frame Number engrave
3: Aluminum Nameplate

Engine Number:

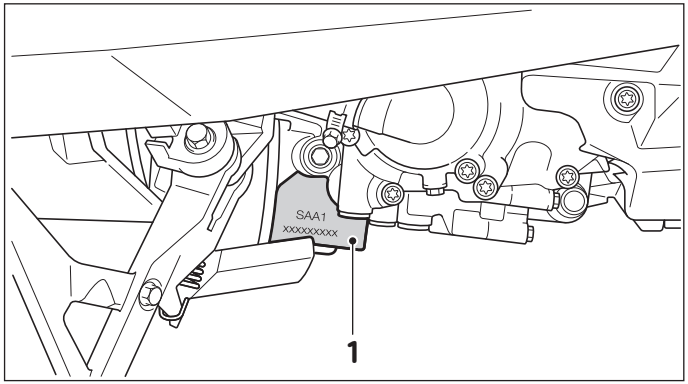

1: Engine Number engrave

The Engine Number is engraved on the crank case as shown in the figure.

Frame Number:

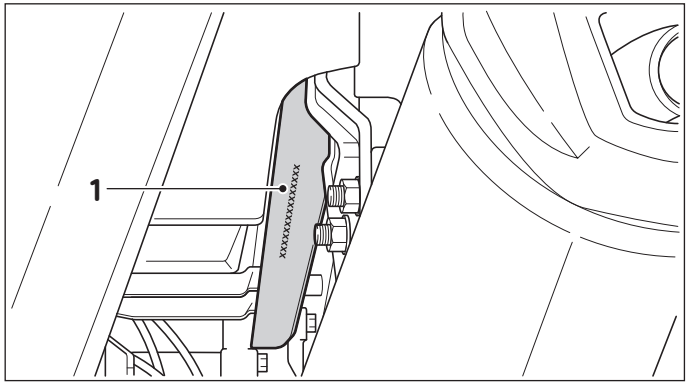

1: Frame Number engrave

The Frame Number is engraved on the chassis as shown in the figure. The Frame Number can be seen from lower-right upwards.

Aluminum Nameplate

The Aluminum Nameplate can be seen behind the Rear Cushion.

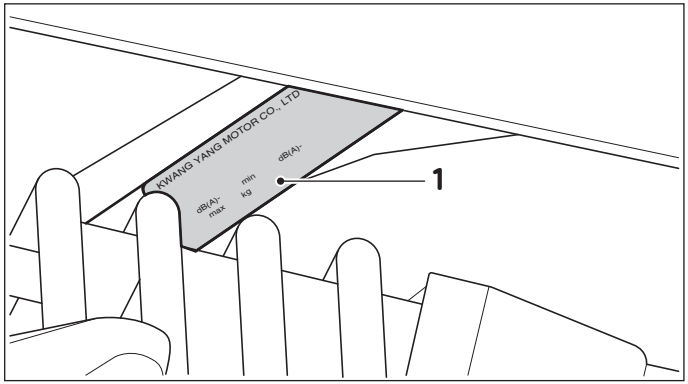

1: Aluminum Nameplate

KWANG YANG MOTOR CO., LTD.

☆ REFBE10000H1100101 ☆

L3e-A3	L3e-A2
e13*168/2013*00121	e13*168/2013*00122
88 dB(A)-3750 min^{-1}	89 dB(A)-3750 min^{-1}
max 395 kg	34.2 kW

Parts Names

Left View of Scooter

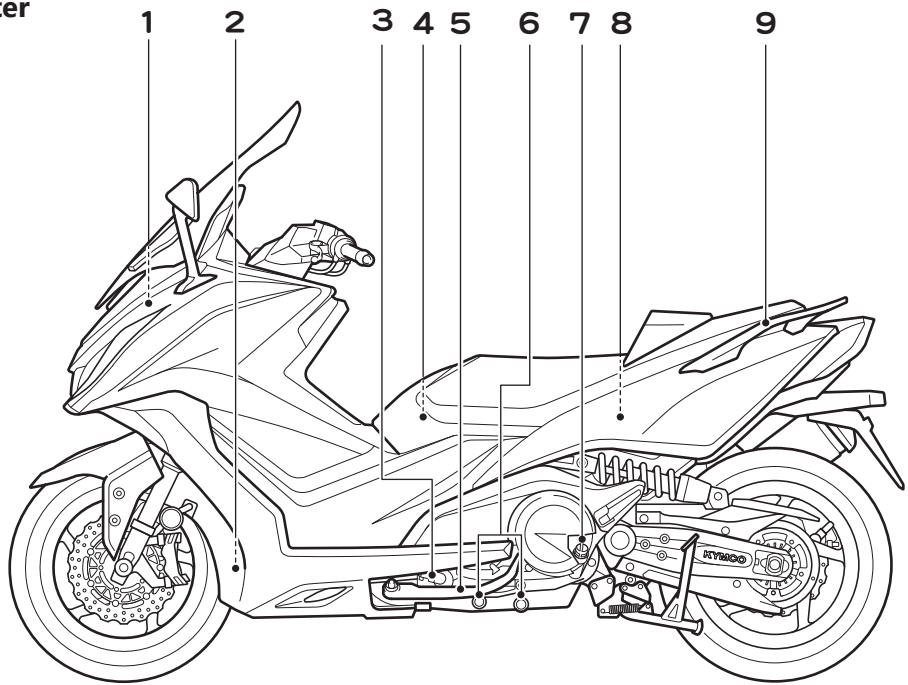

1: Battery
2: Coolant level viewing window
3: Oil filter element
4: Helmet Hook
5: Side Stand
6: Engine Oil Drain Bolt
7: Oil Level Guide
8: Luggage Box
9: Left-rear Grip

Right View of Scooter

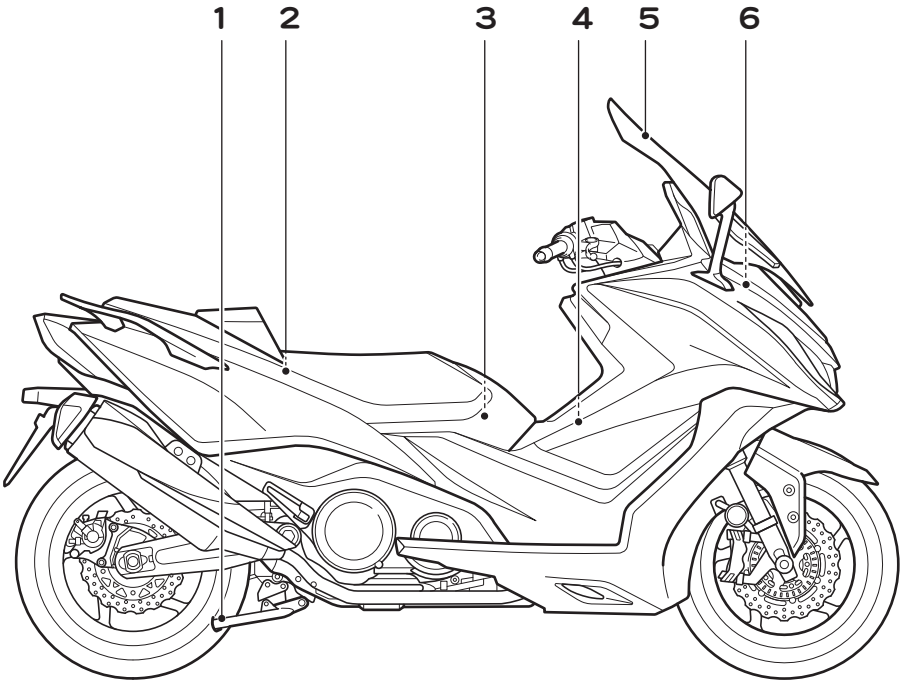

1: Main Stand 2: Tool Pack 3: Fuel Tank Decorative Cover 4: Air Cleaner Element 5: Windshield

6: Fuse

Dashboard and Control Mechanism

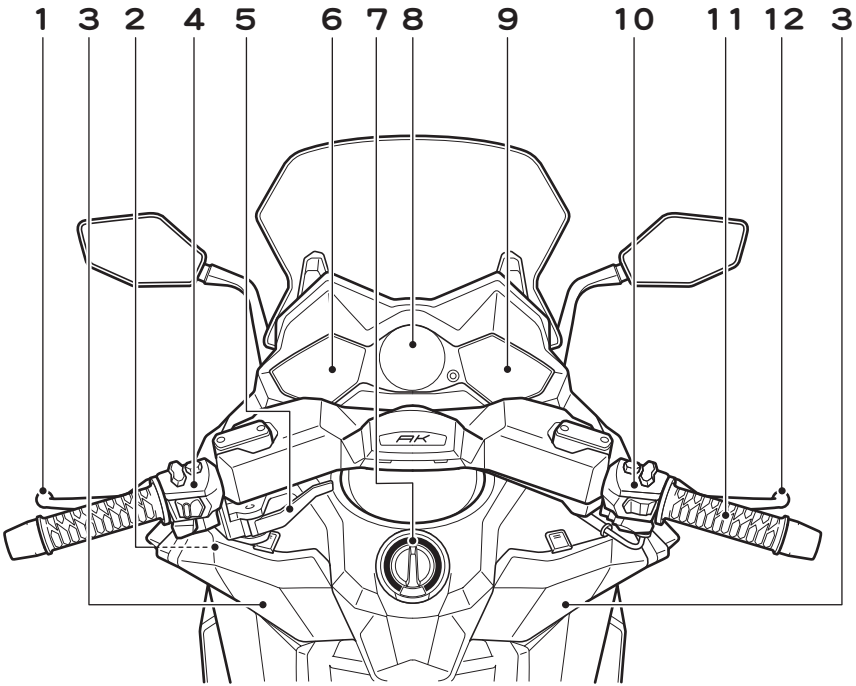

1: Rear Brake Lever

2: USB Power Socket

3: Front Inner Box

4: Left Handlebar Switch

5: Parking Brake Arm

6: Meter – adjustment zone

7: KEYLESS Main Switch

8: noodoe

9: Meter - Display Zone

10: Right Handlebar Switch

11: Throttle Grip

12: Front Brake Lever

Control Functions of Mechanism

LED Dashboard Function

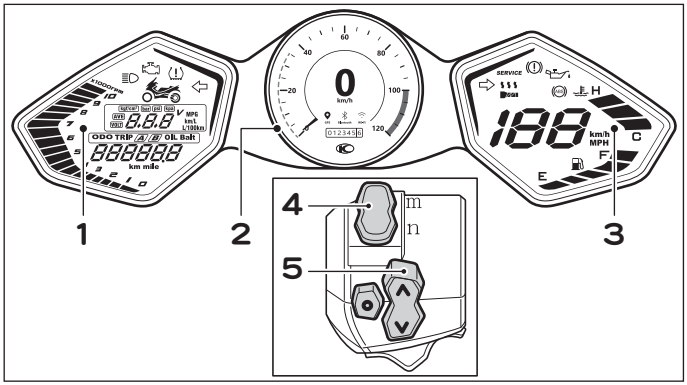

1: Adjustment Zone
2: noodoe
3: Display Zone
4: noodoe and dashboard switch button
5: noodoe and dashboard operation button

Attention

In order to prevent accidents, do not perform adjustment when riding the vehicle. Adjust settings of the LED Dashboard after parking at a safe location.

LED Dashboard - Adjustment Zone

Switch the Handlebar Switch to meter control position (m).

m → Meter

n → noodoe

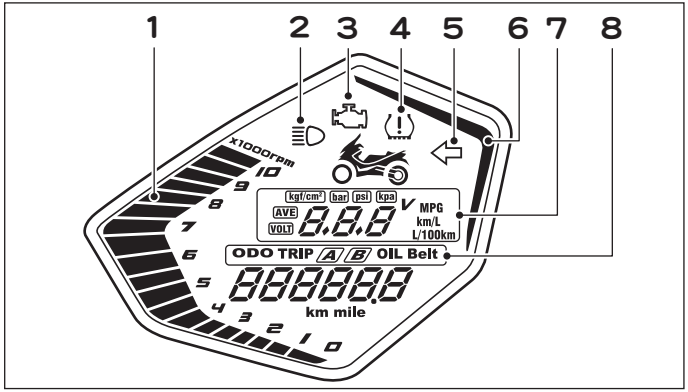

1: Tachometer: Indicates engine speed in rpm; each scale multiplied by 1000 rpm.
2: High Beam Indicator: Headlight is at High Beam Position when this indicator lights up.
3: Engine Detection Indicator: After KEY ON, this indicator lights up for 2s and then goes off automatically, indicating the vehicle is normal. If it does not light up for 2s after KEY ON or it lights up and keeps on after 2s, the vehicle is faulty and shall be checked up by a service station.

4: Tire Pressure Detection Indicator: After KEY ON, this indicator lights up if tire pressure is too high or too low. If tire pressure decreases rapidly, the indicator flashes quickly; if tire pressure decreases slowly, the indicator flashes slowly.

5: Direction Indicator: This indicator flashes when Winker Switch is activated.

6: Mode Indicator: In normal operation, the LED lights up in blue; pressing the MODE button on Left Handle Switch will change the LED into amber for Rainy Day Mode.

7: Function Zone:
- When switching m/n button of Right Handlebar Switch to m,
- Clicking UP (︿) button on the Right Handlebar Switch,
- VOLT (Battery Voltage) → AVE (Average Fuel Consumption) → (Instant Fuel Consumption) → TPS(Tire Pressure)
- VOLT → Indicates Battery Voltage
- AVE → Average Fuel Consumption (AVE) mode, indicates Average Fuel Consumption (km/L and L/100km), (after returning TRIP to Zero, AVE will also return to Zero.)
- → Instant Fuel Consumption Mode, AVE indicator goes off, indicating Instant Fuel Consumption of vehicle (in km/L and L/100km).
- Change unit of fuel consumption: When in AVE/ Instant Fuel Consumption Mode, Click "O" button on Right Handlebar Switch to switch-over between "km/L" and "l/100km".
- Change unit of tire pressure: When in Tire Pressure Display Interface, click "O" button on Right Handlebar Switch to switch-over units in the sequence of "kg/cm^2 → bar → psi → kpa".
- Km/Mile Unit Change-over: When in ODO Display Interface, Press-and-hold "O" button on Right Handlebar Switch for 2s to switch-over between Km and Mile display.

Attention

- **When selecting Mile Gauge, the displayed unit is MPG, i.e. miles per gallon.**
- **The Average Fuel Consumption or Instant Fuel Consumption of the vehicle displayed by the meter is for reference only. The actual fuel consumption is dependent on the actual vehicle behavior.**
- **When Battery Indication is lower than 12V, it means the battery power is low and an immediate check-up or recharge is required.**
- **When switching over between Km and Mile, units of all the meters are switched over simultaneously (except that of tire pressure).**

8: Mileage Information
- Pressing DOWN (﹀)button on the Right Handlebar Switch,
- ODO → TRIP A → TRIP B → OIL → Belt
- ODO → Total running Mileage displayed in Km or Mile.
- TRIP A/TRIP B → Single trip mileage; Single trip mileage can be zeroed by pressing and holding "O" button for 2s.
- OIL → Oil Indicator. After running 5,000km, the "services" symbol on the right of Dashboard lights up constantly, indicating an oil recheck is required.

- Belt → Belt Replacement Indicator. After running 20,000km, the "services" symbol on the right side of the Dashboard will light up constantly, indicating a CVT belt replacement is required.

Attention

- **Oil indicator will only light up after running 5,000km, therefore it will not light up for the first oil replacement at 1,000km. However, a Zero adjustment is still necessary after oil replacement at 1,000km so that the indicator can act correctly for a subsequent indication.**
- **Oil indicator will only light up after running 5,000km, Please go to a local KYMCO dealer for check-up immediately.**

LED Dashboard - Display Zone

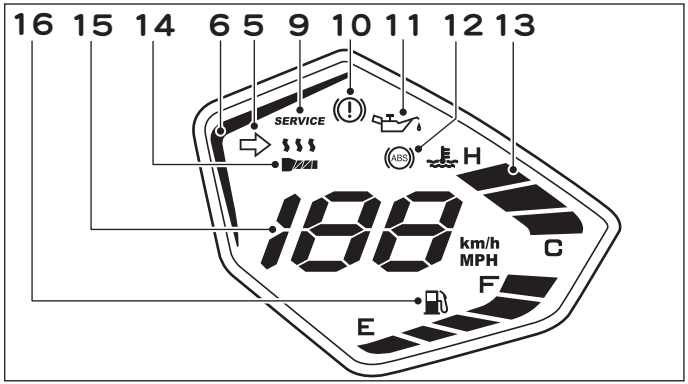

9: SERVICE Warning Indicator:
- The Oil Replacement Indicator (SERVICE Symbol) lights up when the mileage reaches 5000km. Switch to OIL Mode to turn off the Oil Replacement Indicator light (SERVICE Symbol) and reset the mileage readings to zero.
- The Belt Replacement Indicator (SERVICE Symbol) lights up when the mileage reaches 20,000km. Switch to Belt Mode to turn off the Belt Replacement Indicator light (SERVICE Symbol) and reset the mileage readings to zero.

Attention

When OIL mileage accumulation reaches 5000km or Belt mileage accumulation reaches 20000km, you need to zero both OIL and Belt mileage accumulation at the same time for turning off the service Symbols.

10: Parking Brake Indicator: If this indicator lights up, it indicates a locked Parking Brake.

11: Oil Pressure Warning Indicator:
- The Oil Pressure Warning Indicator lights up when KEYLESS Main Switch is activated.
- Oil Pressure Warning Indicator will go off when the engine is started.
- The Oil Pressure Warning Indicator will light up if the oil pressure is lower than normal action when the engine rotates. This denotes a system anomaly; you need to go to a KYMCO dealer for a check-up.

12: ABS Fault Indicator: The ABS Fault Indicator lights up constantly when the KEYLESS Main Switch is activated; it will go off when the vehicle speeds up ≧ 6km/h.

Attention

If ABS Fault Indicator stays lighting up when vehicle speed is ≧ 6km/h, it indicates the ABS system is faulty. Please go to a local KYMCO dealer for check-up immediately.

13: Water Thermometer: If water temperature reaches H (High-temp Position) when vehicle is running, it means water temperature is abnormal. Pull over and park your scooter safely, wait until the cooling water gets cooler before adding coolant and restart your engine. Go to the KYMCO dealer nearest to you for inspection and maintenance. Please note that riding your scooter with the water temperature at a high level may lead to engine failure.

14: Handlebar Heater: After turning ON the Main Switch, press and hold Handlebar Heater Button for 3s or more to activate/deactivate Handlebar Heating Function.

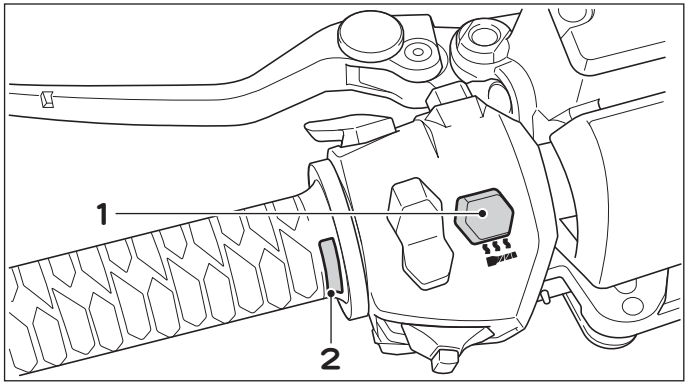

1: Heater Button 2: Handlebar Heater State Indicator

15: Speedometer: Vehicle speed is indicated in km/h or mph. (Switch over between metric and imperial systems by press-and-hole "O" button on Right Handlebar Switch for 2s in ODO Mode.)

16: Fuel Meter: Indicates fuel content in the tank. Replenish with 95 unleaded gasoline when Fuel Meter approaches the last scale near "E" (preventing fuel pump from running dry and damage).

To access the noodoe system

Step 1 See "Download noodoe APP" to download the APP. The noodoe system will get installed automatically after successful download.

Step 2 See the "Handlebar Control button overview" to learn about button operation.

Step 3 Pair with your scooter, please refer to "Pair with your scooter" and "Upload and create noodoe function".

noodoe Function

A See "APP function overview/creation mode" for APP function overview.

B See "Find scooter" to locate your scooter.

C See "Message alert" to learn about message notice function.

D See "Welcome flash" for welcome message function.

To access the noodoe system

Step 1 **See "Download noodoe APP" to download the APP. The noodoe system will get installed automatically after successful download.**

Download the noodoe APP: The user may enter the Google Play Shop (Android) or App Store (iOS) and search with the keyword "noodoe".

GET IT ON Google Play

Download on the App Store

Attention

- **Minimum supported version: Android 4.4.4. or above, iOS 9 or above.**
- **Your smartphone is required to have Google service support to operate the APP successfully.**

Step 2 **Handlebar Control button overview**

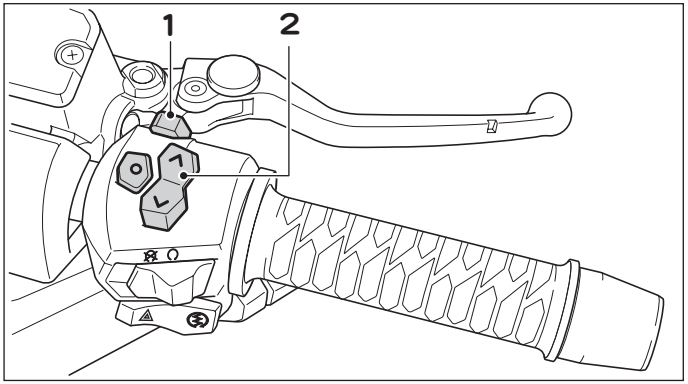

1: Dashboard and noodoe Change-over Switch
2: Dashboard and noodoe Operation Switch

m n	m → For operating the Dashboard functions on both sides of Dashboard.
	n → For operating noodoe function of the Dashboard.
	(︿) Button → Up Button
	(﹀) Button → Down Button
	(O) Button → Enter Button

While Driving:

- Operate (︿) and (﹀) buttons to switch-over between 4 screens of Dashboard noodoe functions.
- Press (O) button to end the action.

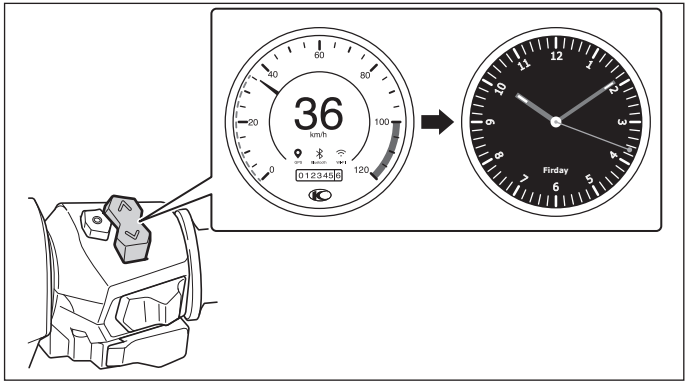

When Stopped:

Message Notice:

- Operate (︿) and (﹀) buttons to switch-over message notices in the Dashboard noodoe Function.
- Press (O) button to activate or close message notices.

Step 3 **Scooter Pairing**

Ignition on(Scooter) → set the switch to n position (Scooter) → Press (O) button for 5s to enter "Pairing Mode" (Scooter) → Select a new user (Scooter) by the Operation Button → Select Bluetooth Device (cell phone) → Link (cell phone) → Confirm Code (cell phone and Scooter) → Press (O) button → Pairing accomplished.

Upload Creation

User created Dashboard can be installed onto scooter.

- Cell phone display

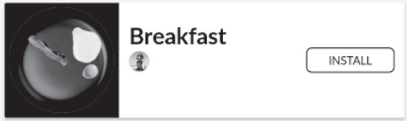

Upload creation to Scooter.

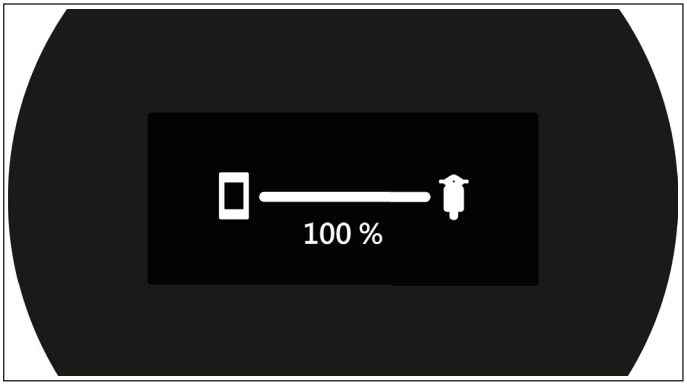

- Dashboard Display

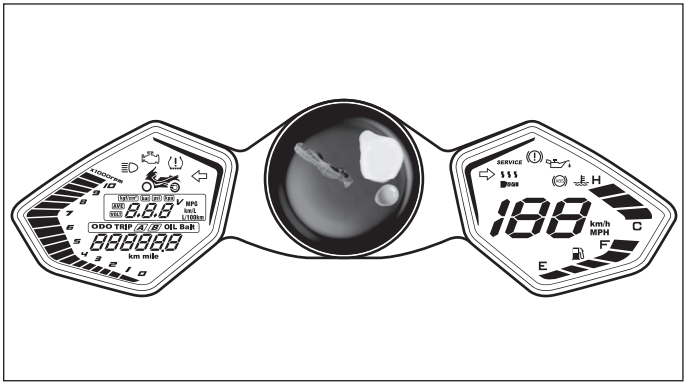

noodoe Function

A App Functions

- The user may browse and collect creations from users all over the world and install them into the Dashboard of your vehicle.
- The user may collect or remix any creation you find, or design his/her own dashboard in Create Mode.

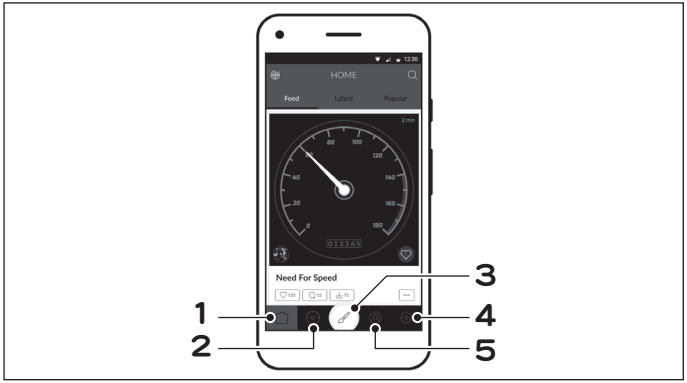

1: Home/Feed
2: My Dashboards
3: Create Mode
4: My Profile
5: Settings

Create Mode

- Create Mode allows you to remix an existing template to your liking.
- Pick between Clock, Weather, Compass or Speed and unleash your creativity. You can change colors, fonts, upload your own images and more possibilities.

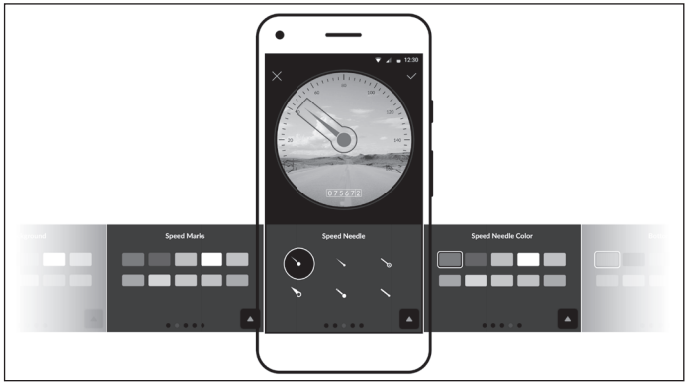

B Find My Scooter

- Forgot where you've parked? No worries, noodoe remembers.
- Tap the icon and the app will guide you back to where you last parked.

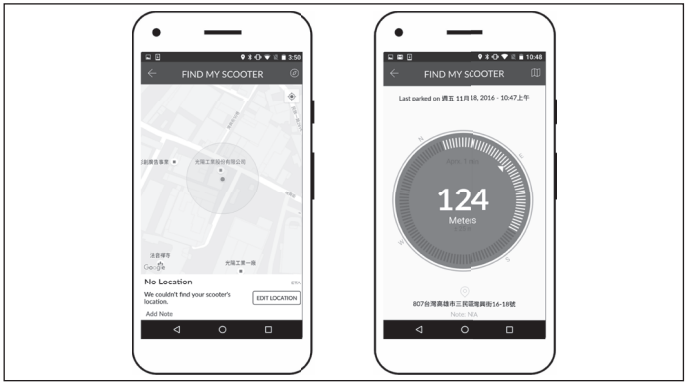

Both Bluetooth/GPS/Internet functions shall be activated in your cell phone.
There are 2 modes of "Find my Scooter" display
1.Map Mode
2.Azimuth Mode

C Message Notice

Once the cell phone is linked, any incoming message will be forwarded to the scooter dashboard (Android users may select display with → Setting → Application procedure in the selection).

- While Driving:

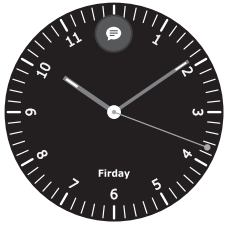

A message "For the sake of safety, no message is viewable when you drive the scooter." is displayed on the top of Dashboard noodoe.

- When Stopped:

Any message received during your ride will be displayed automatically when you make a subsequent stop.
You may also press the Up and Down button on the right handlebar switch (only when your stop the vehicle) to manually check message contents.

D Welcome Light:

Every time you approach your scooter, it will greet you with a Welcome Light. This is very useful when you're looking for your scooter in a crowded parking area or in nighttime.

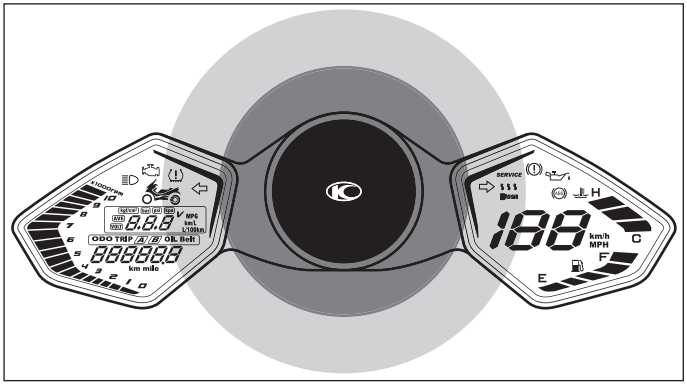

⚠ WARNING

- **When using the noodoe function, make sure that the batteries of both the cell phone and vehicle are fully charged. If you need to start the engine for charging, do it in a well ventilated place.**
- **When Ignition off and the battery voltage gets low, the noodoe system shuts off Bluetooth/connection/ welcome light function automatically . In case it fails to work after the engine has started, get the system checked and repaired by your dealer.**

Attention

1. **For enhancing the accuracy of displayed weather and local information, you should activate GPS and Network functions of your cell phone. (In case of cell phone signal failure, previous information will be displayed until resumption of the cell phone signal for displaying accurate information).**
2. **Switching over of Speed / Temperature / Time units are carried out from a cell phone; minor difference resulting from the frequency of data updating is within a reasonable range.**
3. **Scanning speed and results of Bluetooth Device may be limited in compatibility issues due to cell phone specifications.**
   a. Scanning speed of Bluetooth Device is slow.
   b. Pairing is unsuccessful.
   c. Bluetooth error occurs during the link.
4. **The User needs to set cell phone's Cloud Messaging function to facilitate noodoe message display.**
5. **While driving, noodoe will not display any message (including incoming call, message, LINE, FB, etc.). While vehicle stops, noodoe automatically displays incoming calls and relevant information.**
6. **The last screen at the previous shut down will be the first screen on a re-start.**
7. **Compass function must be activated by performing the setting on a cell phone. The minor errors may exist depending on the upgrade frequency of data.**

8. **Compass only performs self-verification to modify orientation when the vehicle starts to move, therefore it is normal that no orientation calibration is activated after connecting the noodoe App when the vehicle has not started moving yet.**
9. **Time of noodoe will be calibrated automatically after connecting noodoe with a cell phone.**
10. **The user shall never operate noodoe while riding the vehicle or an accident may occur.**
11. **Action of Welcome Light function can be set using an APP (On or Off).**

    When Breathing Light is set enabled:

    a. Welcome Light is only activated on a subsequent connection of a Bluetooth Device. Each activation lasts for 2 minutes before switching off automatically.

    b. After each riding, a single cell phone linkage will only activate Welcome Light 3 times; Welcome Light will shut off Bluetooth function automatically after being activate 3 times.

    c. Entering the Find My Scooter screen will include a and b limitations, the noodoe system will activated Welcome Light until the user leaves the Find My Scooter screen or shuts off the Bluetooth connection function.

    d. The welcome light remains in standby mode for 3 days after shutdown. The Bluetooth function turns off 3 days later or when welcome light or battery voltage gets too low (about 12V).
12. **When KEYLESS Main Switch is Off, all the information will be removed, for preventing leaking of personal info.**
13. **APP info display speed may be limited due to network transfer rate, therefore resulting in slow data indication under poor networking speed.**
14. **There are certain APP notice limitations between iOS and Android system.**
15. **There are possibilities that APP functions may become unusable after upgrading iOS and Android software; some new cell phone models may have unusable issues.**
16. **The noodoe system may shut off and enter into protection mode due to excessive temperature rise under certain special environments or mode; however the system will resume operation when the temperature drops.**

KEYLESS Remote Control

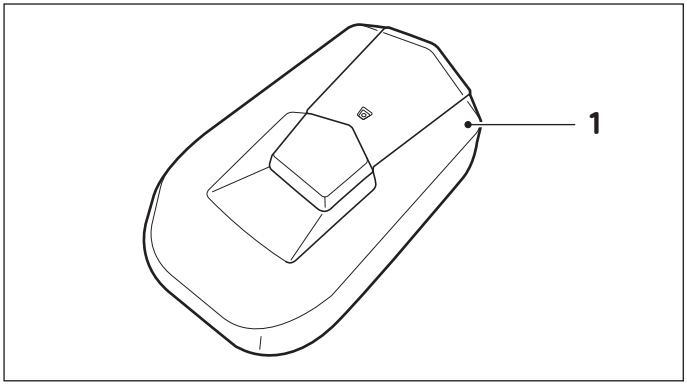

1: KEYLESS Remote Control

KEYLESS is a high-tech electronic master switch that requires no key (see Figure above).
Each vehicle is provided with two Remote Controls (see Figure above).
In case the Remote Control is lost, the KEYLESS Main Switch will be unable to be activated.
Customers must take special care of the safe storage of their remote controls.

⚠ WARNING

In case both KEYLESS remote controllers get lost or damaged, please visit your dealer for inspection or replacement.

Replacing battery of Remote Control

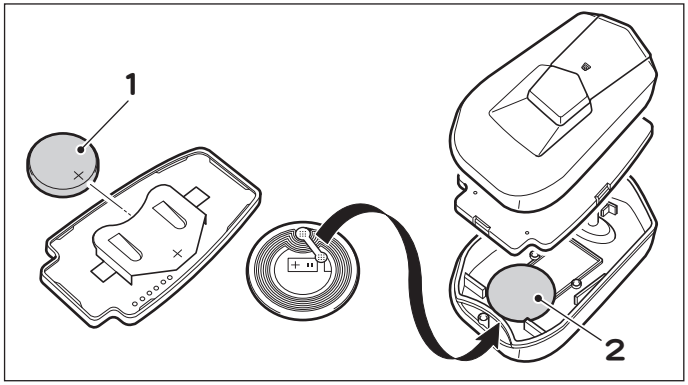

1: Battery of Remote Control 2: Antenna sticker

Battery Model for Remote Control: CR2450

⚠ WARNING

In case of replacing the case or battery, beware of the sticker placed on the case (shown above) do not lose it.

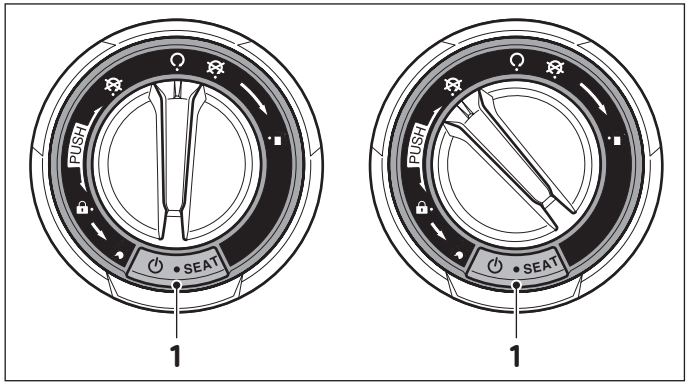

1. Button

To close down the Main Switch, turn the Main Switch to position, backlight of the Main Switch lights up in red (constantly); it will go off, with the buzzer giving a long beep, now that the KEYLESS system and backlight have been shut down.
When the button is pressed down, backlight of Main Switch will light up about 1s before going off. If the backlight is not on/off normally, immediately go to a KYMCO dealer for checkup.

: Steering Stem is locked at this position

: All the power of the vehicle is cut off at this position. (Engine stops)

: All the power of the vehicle is ON at this position. (Starting the engine is allowed.)

PUSH : Indicates a Push-down is required for the action.

: Indicates to open the seat pad.

: Indicates to open the Fuel Tank Outer Cover. ◦

● : Indicates the position of a segment.

KEYLESS Sensing distance

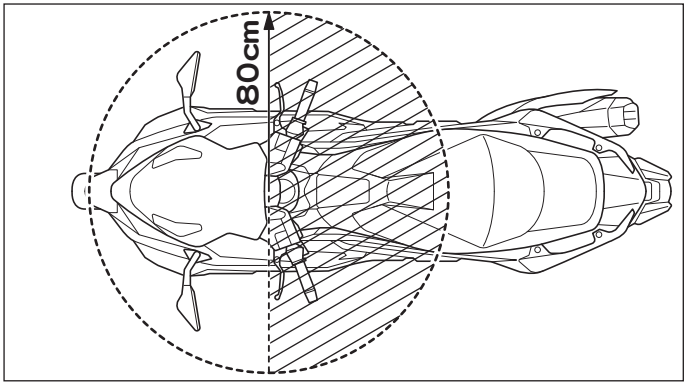

Remote Sensing: 0 ~ 80cm
Short-range Sensing: 0cm

Attention

- **The optimum sensor range is 80cm which may vary with ambient conditions.**
- **Please lock the steering rod, close the KEYLESS system, and carry the remote controller with you before leaving your scooter.**

KEYLESS Main Switch

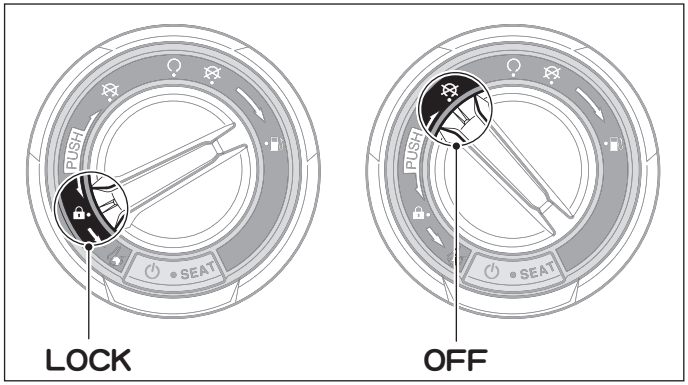

KEYLESS Controller Theft Prevention Setting – Remote Sensing (Locking)

1. When parking the vehicle and ready to leave, the user shall turn KEYLESS Main Switch from ON to OFF and LOCK position; this will activate the red indicator of KEYLESS Main Switch Decorative Cover; pressing the button on the bottom will activate a long BEEP and the knob turns automatically to complete locking.
   If the button is not pressed, the system will issue a long beep after several seconds, with the knob turned automatically.
2. When the power of Remote Control is weak or the surrounding is obstructive that Locking cannot be triggered.

KEYLESS CONTROLLER Theft Prevention Setting – Remote Sensing (Unlock)

KEYLESS Controller Remote Sensing Mode is operated as follows

1. Press down the button and the decorative cap of the Main Switch will light up in blue, accompanied by 2 short beep sounds. Turn the knob to any position other than idle, then to ON, blue light will go out. Now the engine is allowed to start.
2. When the power of Remote Control is weak or the surrounding is obstructive that Locking cannot be triggered, you may use short-range sensing by putting the back of Remote Control (the side without buttons) against the circular mark on the Front Inner Box and then operate the same as for the remote mode.

Attention

- **It is strongly recommended that the user shall use Remote Sensing (Locking) mode to activate the Theft Prevention function.**
- **In case the KEYLESS main switch failed to operate in remote mode, try replace battery of the remote controller with a new one or use local sensor to unlock your scooter.**

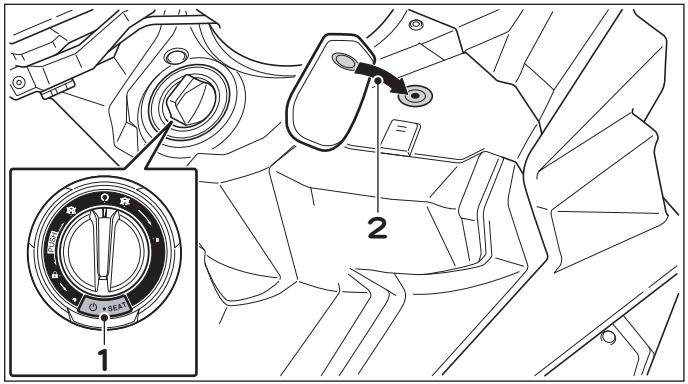

1. Button
2. Short-range Sensing: Place circle on the Remote Control against Circular Mark on the Luggage Cabinet.

KEYLESS CONTROLLER Theft Prevention Setting – Short-range Sensing (Unlock)

When the power of the Remote Control is weak or the surroundings are obstructive such that Locking cannot be triggered.

Put the back of the Remote Control (the side without buttons) against the circular mark on the Front Inner Box and press the button; after hearing 2 short BEEPs, the KEYLESS Main Switch turns from OFF to ON and the indicator on its decorative cover lights up in blue, indicating completion of Unlocking.

KEYLESS CONTROLLER Theft Prevention Setting – Short-range Sensing (Locking)

By following the same steps of the Remote Sensing (Locking).

Attention

- **In the LOCK and OFF state, if knob is not turned after unlocking, the blue light will stay on constantly. Turning the knob to ON will still allow starting the engine. Do NOT forget to press the button to activate locking.**
- **After turning ON → OFF, turning it back to ON before the long BEEP sounds up will allow you to operate the scooter again.**
- **In the ON or OFF state, pressing the button will open the Luggage Box. Turning the Knob to the refuel symbol on the right will open the outer cover of fuel tank (see drawing).**

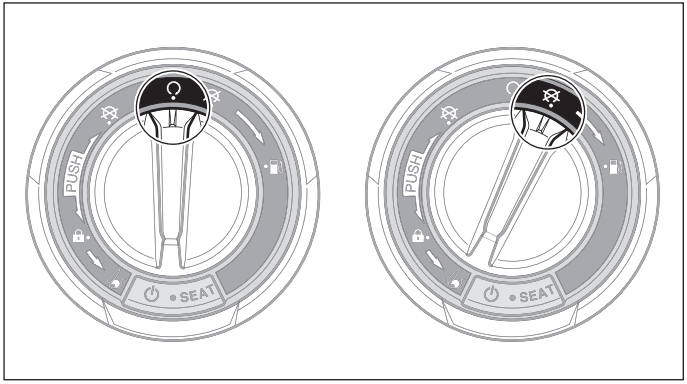

WARNING

Never turn the Main Switch to 🔒 or ⊘ when you are riding your vehicle, or an accident may occur.

Steering Stem Lock 🔒

For theft prevention, lock the steering stem when parking your scooter.

Locking Method:

Turn the Steering Stem to the left, then press the Main Switch inward and turn it to the left to "🔒" position.

Unlocking Method:

Press the Main Switch inward and turn it from "🔒" position to the right to "⊘", the lock is unlocked.

Attention

- **When locking the Steering Stem, turn the Main Switch to "🔒", verify is the stem is locked before leaving the vehicle.**
- **Do not mark your scooter at locations where traffic safety may be obstructed.**
- **The location (such as back pocket, back-bag, etc.) where you put your Remote Control may affect the KEYLESS System.**
- **Removing the Remote Control will disable the vehicle for start-up.**
- **When KEYLESS system is activated (Blue backlight is on), the Main Switch may still in the idle position; you will need to turn it to a set position (the right position) to start your vehicle.**
- **Avoid placing the Remote Control at a damp or high-temperature location.**

- **Sensing distance of remote control may alter when the battery power becomes week.**
- **Avoid improper actions when replacing battery of the Remote Control, for not damaging the unit. It is suggested that you should go to a professional service station for repair.**

Right Handlebar Switch

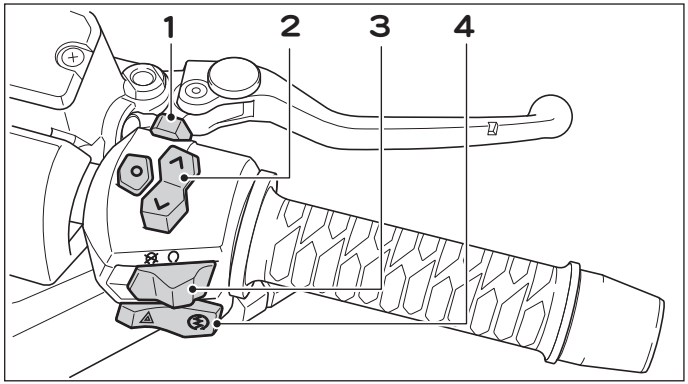

1: Dashboard and noodoe Change-over Switch
2: Dashboard and noodoe Operation Switch
3: Engine Start/Stop Switch
4: Park Alert Switch/ Electrical Start Switch

1. Dashboard and noodoe Change-over Switch: Press this button to change over between Dashboard and noodoe interfaces.

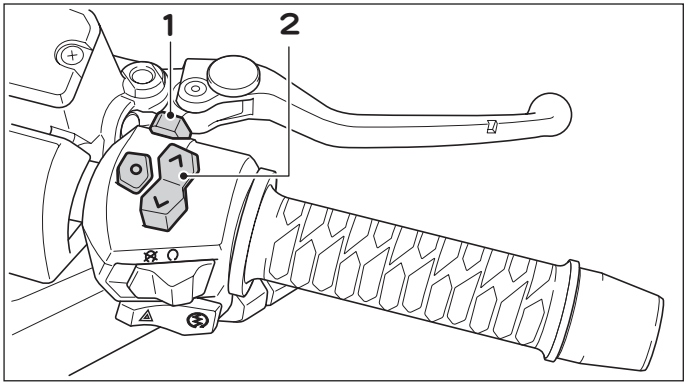

1: Noodoe Change-over Switch
2: Noodoe Operation Switch

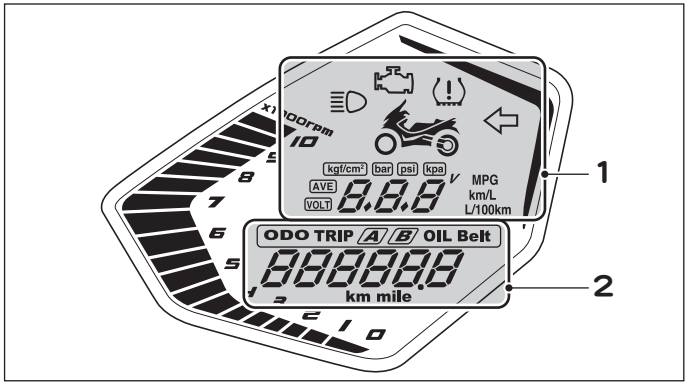

1: Set switch to "m" and select UP (︿) button
2: Set switch to "m" and select DOWN (﹀) button

2. Dashboard and noodoe Operation Switch
   - When the switch is at [m], selecting UP operation button (︿) will switch the vehicle information on the upper-left of Dashboard.
   - When the switch is at [m], selecting DOWN operation button (﹀) will switch the vehicle information on the lower-left of Dashboard.

- When the switch is at [n], selecting UP (︿) /Down (﹀) operation button will switch the noodoe information at the center of Dashboard.

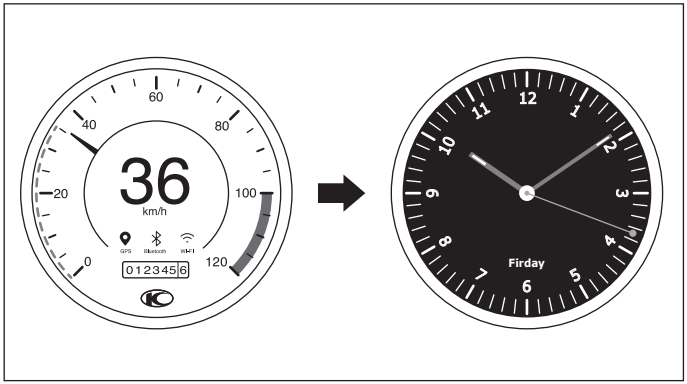

3: Engine Stop Switch

⊗ : At this position, engine is stopped and cannot be started; it requires switching back to "◯" position to start the engine.

◯ : At this position, starting the engine is allowed.
During normal riding, put the Engine Stop Switch at 「◯」 position. In the event of emergency, such as fuel cable jam or vehicle tumbling, turn the switch to 「⊗」 position to force-stop the engine.

4: Park Alert Switch/ Engine Ignition Switch
Park Alert Switch

⚠ : Push this switch to the left, all the Fault Alert Lights (4 winkers, left and right, front and rear) will flash.

OFF: Push this switch to the right, all the Fault Alert Lights stop flashing.

Attention

Do NOT use the Fault Alert Light for prolonged period after stopping the engine, or power of battery will deplete.

Electrical Start-up Switch

Turn ON Main Switch, do remember to pull-up both the front and rear brake levers; press down this button to start the engine.

Attention

To avoid insufficient voltage of battery and you cannot start the engine, go to KYMCO dealer for check-up when the starting motor becomes less powerful.

Left Handlebar Switch

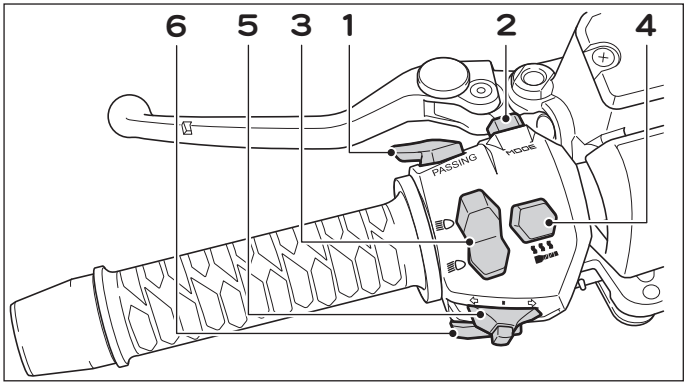

1: Over-pass Light SW.
2: Mode Change-over SW.
3: High/Low Beam SW.
4: Handlebar Heater SW.
5: Winker SW.
6: Horn SW.

1: Over-pass Light SW.: Pressing this button will activate High Beam.
2: Mode Change-over SW.: Pressing this button will turn the Dashboard LED into Yellow, for Rainy Day Mode (Deceleration Control).
3: High/Low Beam SW.: Pushing the switch to 「 ≡D 」 for High BEAM, to 「≡D」 for Low Beam.

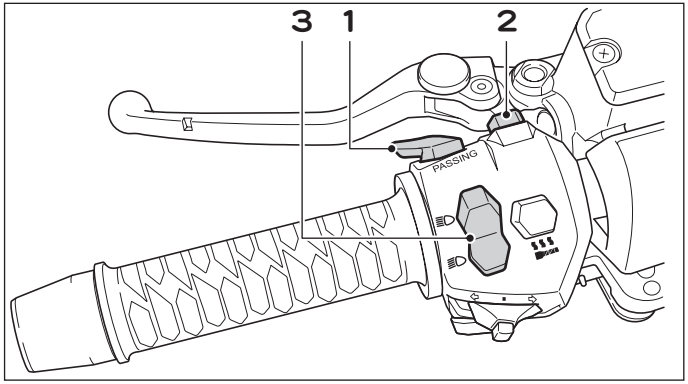

1: Over-pass Light SW.
2: Mode Change-over SW.
3: High/Low Beam SW.

4: Handlebar Heater SW.
- After turning ON the Main Switch, press and hold Handlebar Heater Button for 3s or more to activate/deactivate Handlebar Heating Function.
- After activating Handlebar Heater controller, click the button to select heating level in the sequence of 1 > 2 > 3 > 1 > 2 ..

Handlebar Heater State Indicator:

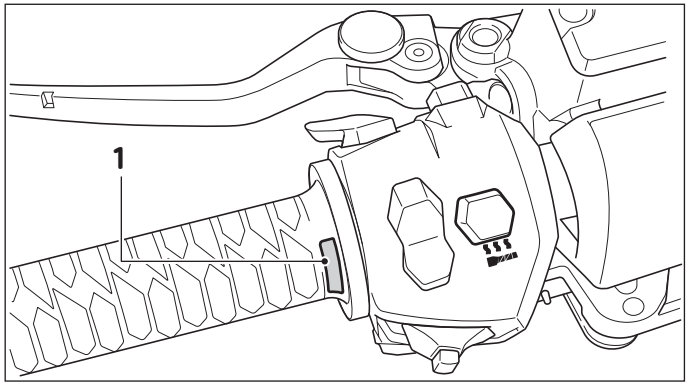

1: Handlebar Heater State Indicator

a. After turning ON KEYLESS Main Switch, a self-check is performed with the LED indicator flashing in a 1-white and 1-red format.
b. After KEYLESS Main Switch ON and indicator self-check, in the event of a Handlebar Heater anomaly, the indicator will flash in red, with the Handlebar Heater function disabled. (Refer to anomaly states below for indicator flashing modes.)
c. After KEYLESS Main Switch ON, press and hold the button to activate Handlebar Heater. Indicator lights in white constantly for normal operation.
d. Turn KEYLESS Main Switch OFF or press and hold the button to deactivate Handlebar Heater. The indicator will go out, indicating the function is switched off.
e. If Handlebar Heater is faulty, the indicator will flash in red. After eliminating the fault and re-starting (Key Off → Key On) the vehicle, indicator will resume normal operation. Clicking the button when the indicator is flashing in red will stop the flashing. For the sake of your safety, please go to a KYMCO dealer for check-up.

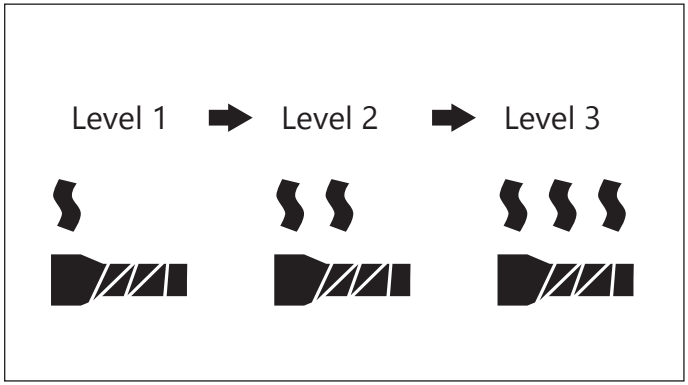

Dashboard Level Indication:

a. On activation of heating function, Dashboard will receive signal from controller and display the current heating level to the user.
b. Level Indication:
   •Level 1:45℃
   •Level 2:55℃
   •Level 3:65℃
   •Heating Function OFF: All goes off.

(This is only the setting value; the actual temperature depends on the environment temperature and vehicle condition, a difference may exist.)

c. If the signal from the controller to the dashboard is faulty for any cause, a symbol flashes in the Dashboard.

5. Winker SW.: Use the winker when making a turn or changing a lane. Pressing-in the button will deactivate the Winker.
   ⇦ : Use this position for Left Turn.
   ⇨ : Use this position for Right Turn.
   ■ : To release Winker, just press-in the button.

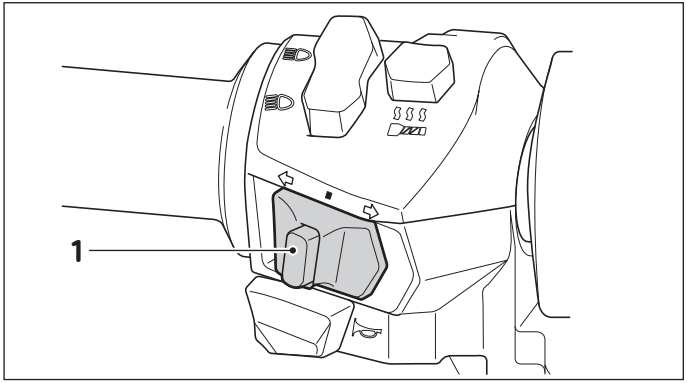

1: Winker SW.

Attention

Winker will not release automatically, it requires resuming after use. Forgetting to resume it may result in traffic safety issues.

Winker will not activate when the KEYLESS Main Switch is at " " position.

6. Horn Switch: Horn will sound when Main Switch KEY is turned ON at " " position.

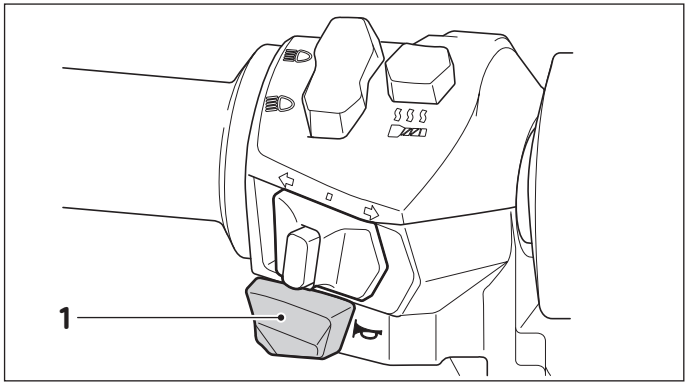

1: Horn SW.

Rear Brake Lever

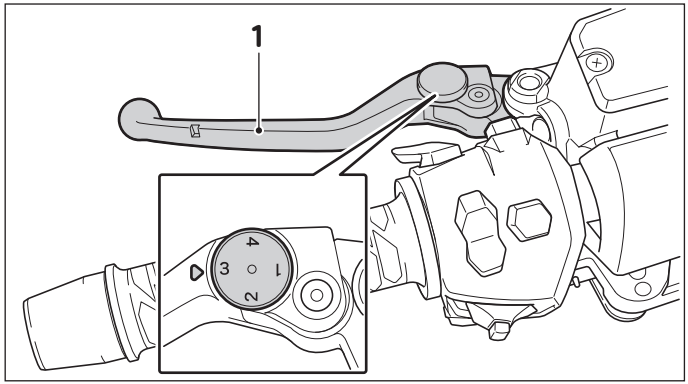

1: Rear Brake Lever

Rear Brake Lever situates on the Left Handlebar; when applying the Rear Brake, hold the Front Brake Lever with left hand and apply a proper force on it.

⚠ WARNING

Improper operation may result in danger.

Attention

Rear Brake Lever is provided with an adjustment knob, allowing adjusting the space between the Rear Brake Lever and the Left handlebar. Please set the knob to the proper position and align with the Alignment Mark on the Rear Brake Lever.

Front Brake Lever

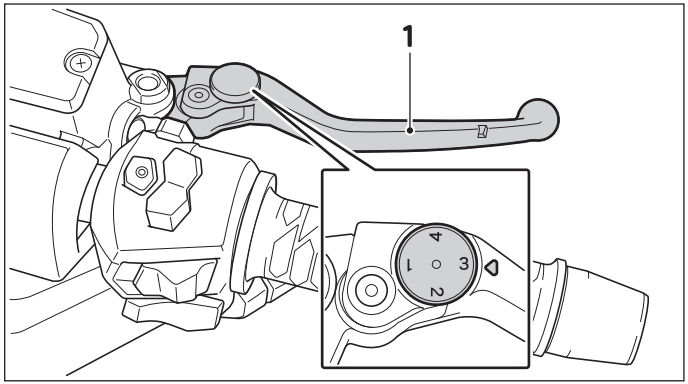

1: Front Brake Lever

Front Brake Lever situates on the Right Handlebar; when applying the Front Brake, hold the Front Brake Lever with right hand and apply a proper force on it.

⚠ WARNING

Improper operation may result in danger.

Attention

The Front Brake Lever is provided with an adjustment knob, allowing adjusting of the space between the Front Brake Lever and the throttle grip. Please set the knob to the proper position and align with the Alignment Mark on the Front Brake Lever.

Helmet Hook

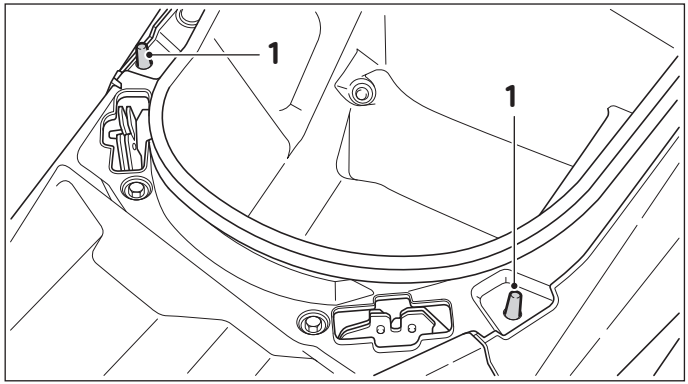

1: Helmet Hook

A Helmet Hook is provided on the front edge of Seat Pad. Lift up the Seat and put the buckle of the Helmet around the Hook, then close up the Seat Pad.

⚠ WARNING

DO NOT ride your scooter with the helmet attached to the hook. A hooked helmet may hit others or hamper your driving when riding your scooter which, in turn, may hamper your riding safety.

Luggage Box

Front Inner Box

Open the left/right Front Inner Box

Press down the Front Inner Box pushbutton and pull the cover downward to open it.

Close up the left/right Front Inner Box

Pushing the cover back to its original position will close it up.

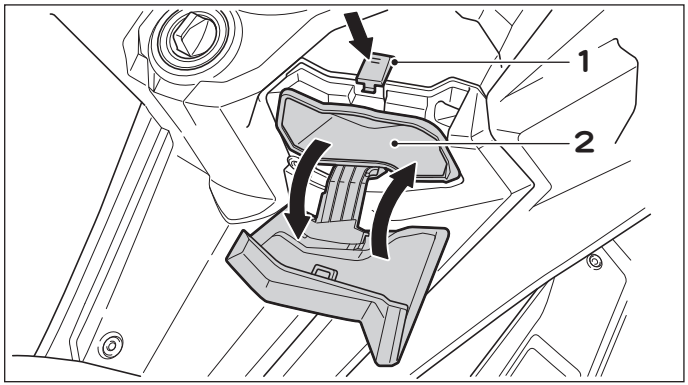

1: Front Inner Box pushbutton 2: Luggage Box

Luggage Box

The Luggage Box is situated beneath the Seat Pad. The Helmet and other objects may be carried in the Luggage Box.

Open Luggage Box

1. Mechanical:Push down Main Switch and turn it counter-clockwise to "" position to open the Luggage Box.
2. Electronic:
   - When using KEYLESS Main Switch for KEY ON, press the SEAT button below to open the Luggage Box.

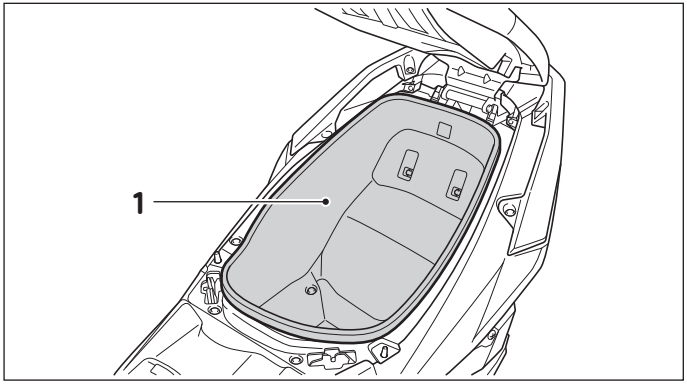

1: Luggage Box

Attention

Place the Helmet in an optimal manner. Anything exceeding the capacity of Luggage Box may damage the hinge of Seat Pad while closing the Seat.

Attention

- **It may be impossible to put a Helmet of different size and shape into the Luggage Box. Please select a Helmet that fits the capacity of the Luggage Box.**
- **For the purpose of theft prevention, do not put valuables in the Luggage Box. Close the Seat Pad when leaving the scooter.**
- **Make sure not to leave the key in the Luggage Box while closing it.**
- **To prevent mold generation, do not leave a wet raincoat or clothing in the Luggage Box.**
- **Empty the Luggage Box before washing the scooter, so that objects do not get wet.**
- **Due to engine operation and environmental factors, the Luggage Box tends to be warm and humid; do not put fragile, flammable or easy to decay objects in it.**

Do Not exceed the following load limits:

Front Inner Box

1.3 kg

Luggage Box

10 kg

Components inside the Luggage Box:

- Light (Lighting angle adjustable): The lamp lights up when Seat Pad is lifted up, goes out when closed. (The Luggage Box Light is provided with light-sensing switch; in case the user forgets to close the Seat Pad or the Seat fails to fully close up, system will cut the power automatically after a set time, preventing any power loss of battery.)

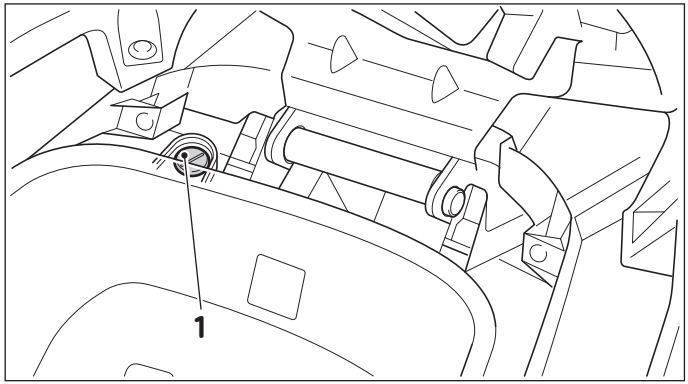

1: LED Light of Luggage Box, with Light Sensing Switch

Windshield

There are two options of Windshield Height subjecting to rider's need.

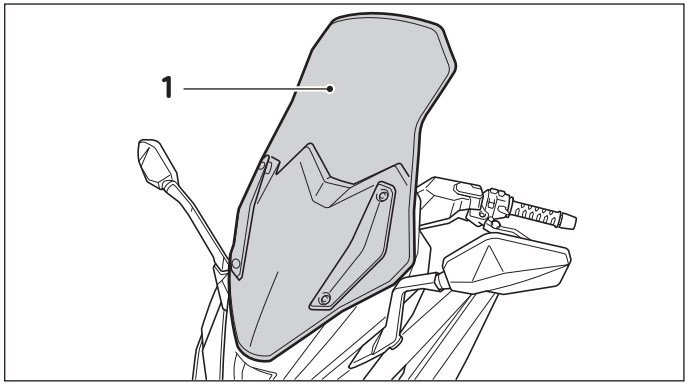

1：Windshield

Adjusting Windshield Height

1. Remove the Fixing Screws and Front Guards of the Windshield.

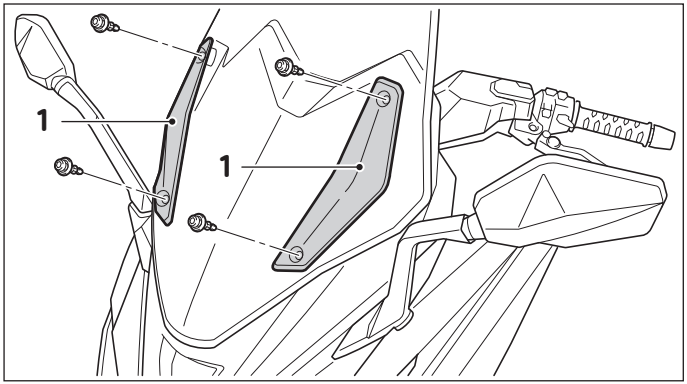

1: Front Guards of the Windshield

2. Remove Screws and Windshield.

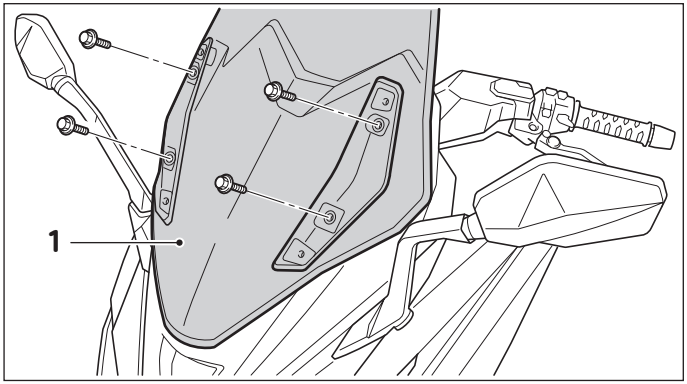

1: Windshield

3. Remove the Windshield Partition Panel Bracket.

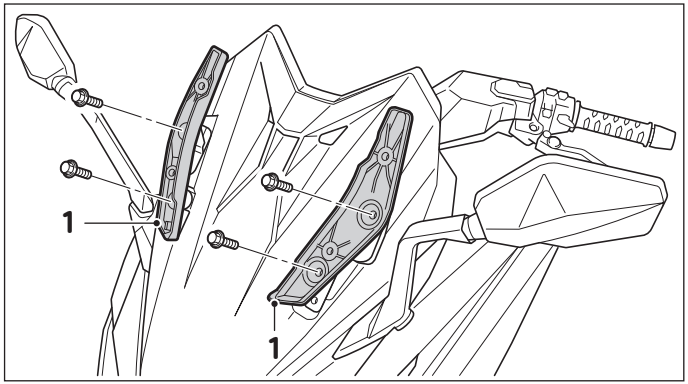

1: Windshield Partition Panel Bracket

4. Fix the Windshield Partition Panel Bracket to the desired position; Tighten screws to specified torque.
5. Install the Windshield with screws to the fixing position.
6. Tighten screws to specified torque.

⚠ WARNING

Slackened Windshield can lead to accidents. Make sure that screws are tightened to specified torque.

7. Re-install Windshield Front Guard and Quick-fix Screws.

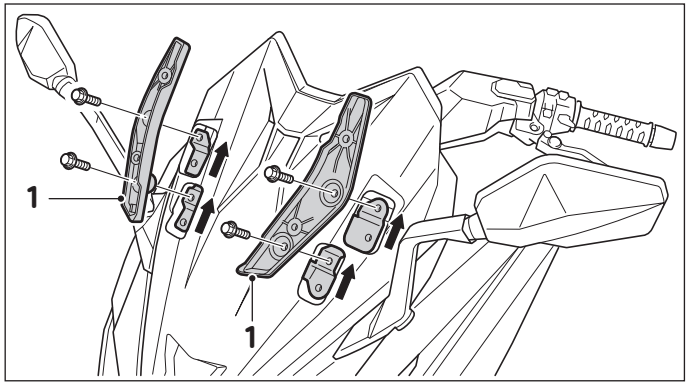

1: Windshield Partition Panel Bracket

Tightening Torque:
Bracket Screw
20-28 N-m (204-285.6 kgf-cm)
Windshield Screw
10-14 N-m (102-142.8 kgf-cm)

Back Mirror

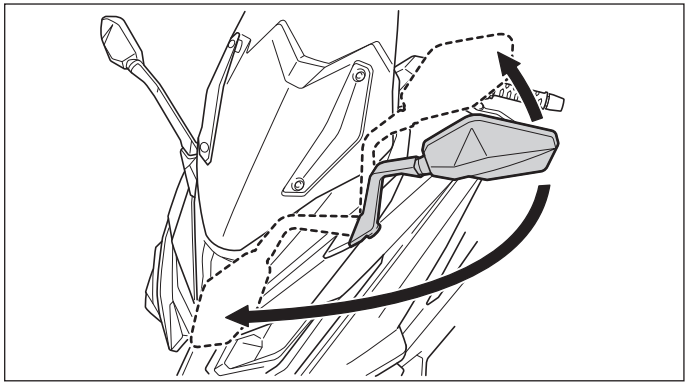

1: Back Mirror

Back Mirrors are the important equipment for securing the rider's safety before and during riding. Proper use of the Back Mirror is essential.
Back Mirror is designed to be capable of turning forward and backward. When parking in a narrow space or putting down the vehicle, you may adjust the Back Mirror to a proper position.

⚠ WARNING

- **Adjust Back Mirrors to proper positions before riding the vehicle.**
- **To secure safety of the rider as well as other vehicles in behind, never remove the Back Mirror or replace them with inadequate ones.**

USB Power Socket

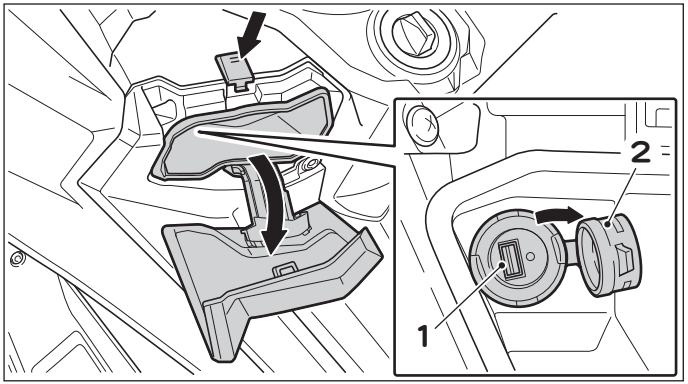

1: USB Power Socket 2: Protection Cap

This vehicle is provided with a USB Power Socket. Your may connect a low power consumption product to the Socket, for charging the product while the engine is running.

⚠ WARNING

- **To avoid electrocution or short-circuit, make sure to cover-up the protection cap after using the USB Power Socket.**
- **To prevent any accident from occurring, park your Scooter at a safe location before using the USB Power Socket.**

Attention

- **SB Power Socket can only be used with a running engine.**
- **To prevent power depletion of battery, do not charge a product using the USB Power Socket without running the engine.**
- **To prevent fuse from being blown, do not charge a product with a load exceeding 10W; if overheat occurs during charging, the system will cut off power supply automatically.**
- **After riding and before leaving the scooter, make sure the product is unplugged and the Protection Cap is properly covered back.**

Rider Backrest

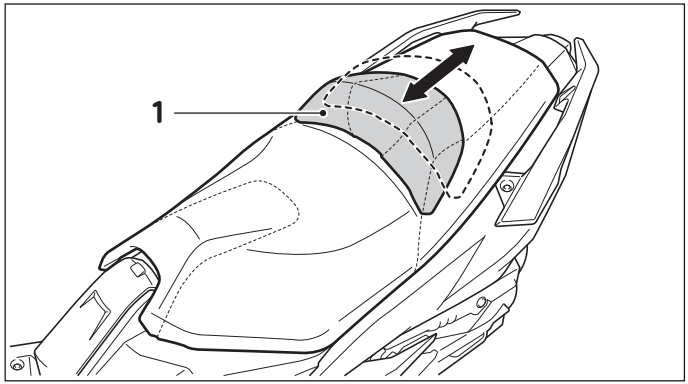

1: Rider Backrest

To enhance riding comfort, the Rider Backrest is adjustable to 2 different positions.

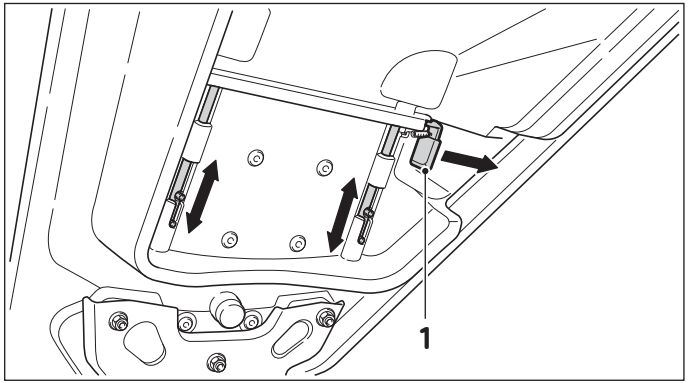

1: Lever

1. Lift up Seat Pad.
2. Push down the Lever.
3. Slide to the front or back for a position most fit the rider.
4. Release the Lever, slightly slide the Backrest to position.
5. Close up the Seat Pad.

Main Stand

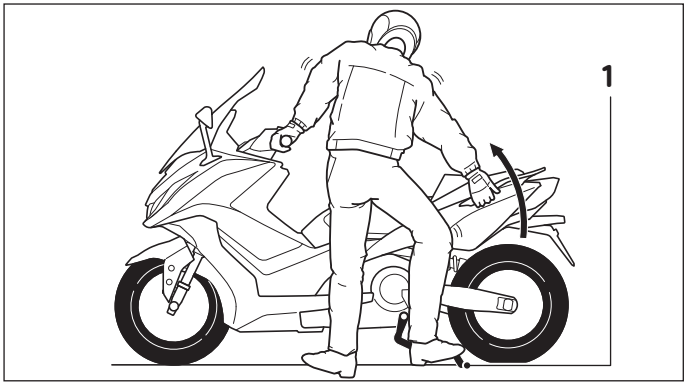

1: Main Stand

When parking with Main Stand, stop the engine and turn the Main Switch off.
While keeping the scooter perpendicular to the ground, holding the Left Handlebar with left hand and Rear Grip with right hand, thread upon the Main Stand using the right foot and exert force with both right foot and right hand to lift the vehicle up to a standing pose.

⚠ WARNING

- **Make sure the Main Stand springs up fully before riding the scooter.**
- **The Main Stand must not come in contact with the ground while riding the scooter, otherwise it may interfere the riding and cause loss of control due to abrasion with the ground.**
- **Main Stand may fail to spring up to position while running the vehicle if the bracket spring becomes weak. Go to a KYMCO service station for replacement as soon as possible.**

Side Stand

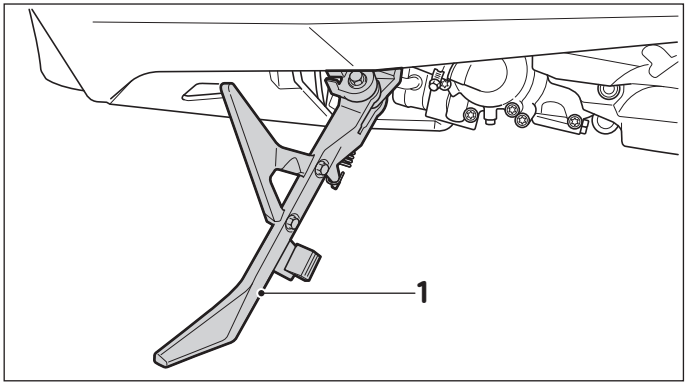

1: Side Stand

Side Stand situates on the left side of scooter; push the Side Stand down or up with your foot. Engine cannot be started when the Side Stand is pushed down.

⚠ WARNING

- **Side Stand Switch is a part of the ignition obstruction circuit; the rider must push the Side Stand up before riding the vehicle. If this function becomes inactive, go to a KYMCO service station for repair.**
- **Do NOT ride the vehicle if the Side Stand fails to lower down or maintain the pushed-up position; should the Side Stand touch the ground, the rider may lose control of the vehicle.**

Fuel Tank Decorative Cover/ Fuel Inlet Cover

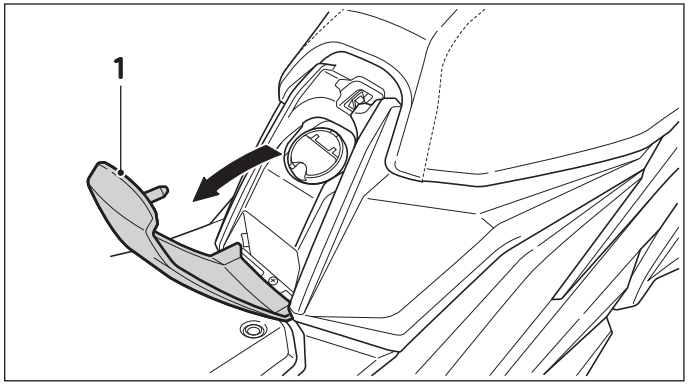

1: Fuel Tank Decorative Cover

Open Fuel Tank Decorative Cover

Turn the KEYLESS Main Switch to the OFF position, turn the knob clockwise to the end to release the Fuel Tank Decorative Cover ⛽.

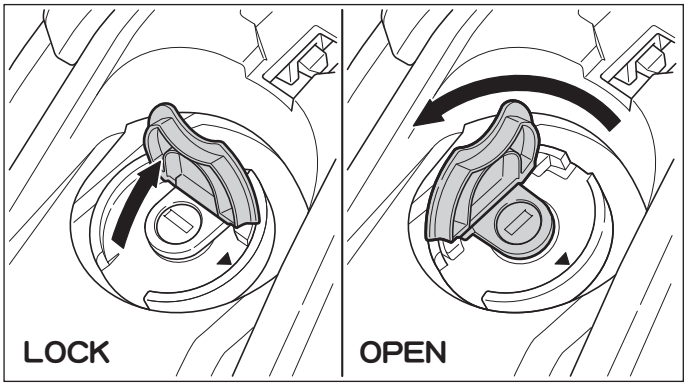

Open the Fuel Tank Cap upwards and rotate it to the right to open it.

To close the Fuel Tank Outer Cover

Turn the Fuel Tank Cap back, make sure the Fuel Tank Cap is in position before pressing the Fuel Tank Outer Cover back; ensure that Fuel Tank Outer Cover is fully engaged.

⚠ WARNING

In order to prevent fire risks caused by fuel overflow from the Fuel Inlet, make sure the Fuel Tank Cap is fully locked after refueling.

TPMS, Electronic Tire Pressure Sensor

Operation of TPMS, Electronic Tire Pressure Sensor:

- TPMS consists of 2 wireless Tire Pressure Sensors (1 each on respective nozzle of front and rear tire) and a controller. The sensor detects the current tire pressure and sends the signal to Controller by wireless transmission. The Controller then sends the signal to Dashboard, informing the rider of pressure condition with the displayed indicator.

Attention

1. **When KEYLESS Main Switch is set ON, the Tire Pressure Sensor related Model Symbol on the left side of Dashboard will light up; if this symbol then goes out automatically, the tire pressure is normal (as shown in the Figure).**

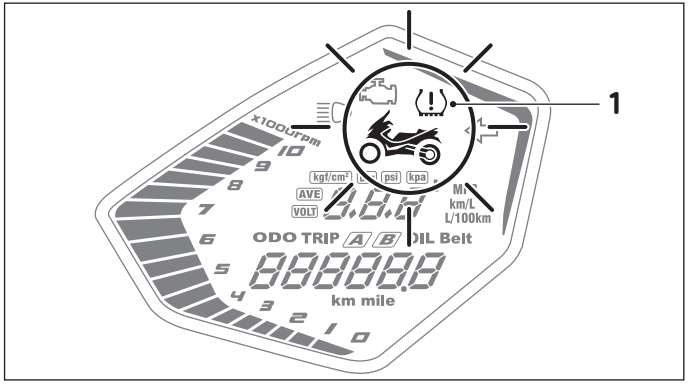

1: Tire Pressure Sensor related Model Symbol

2. **When KEYLESS Main Switch is set ON, the Tire Pressure Sensor related Model Symbol on the left side of Dashboard will light up; if this symbol stays on constantly, the tire pressure is not normal.**
   Anomalies include:

Front Tire Pressure
≧ 3.2kgf/cm^2 or < 1.6kgf/cm^2
Rear Tire Pressure
≧ 3.75kgf/cm^2 or < 1.65kgf/cm^2

   The owner needs to replenish or release tire pressure if the reading is too low or too high. Consult the dealer for assistance if you have any questions.
   (Standard tire pressure under normal inflation: Front Tire 2.35kgf/cm^2; Rear Tire 2.7kgf/cm^2)
3. **DO NOT remove wireless Tire Pressure Sensor or Controller, or TPMS function will be lost.**
4. **No re-adjustment of TPMS is required when a new tire or rim is replaced.**
5. **Re-adjustment of TPMS is required when replacing a new wireless tire pressure sensor and controller; please consult a KYMCO dealer.**
6. **When replacing a tire rim, the Tire Pressure Sensor shall be kept in a correct order to distinguish the front one and the rear one.**

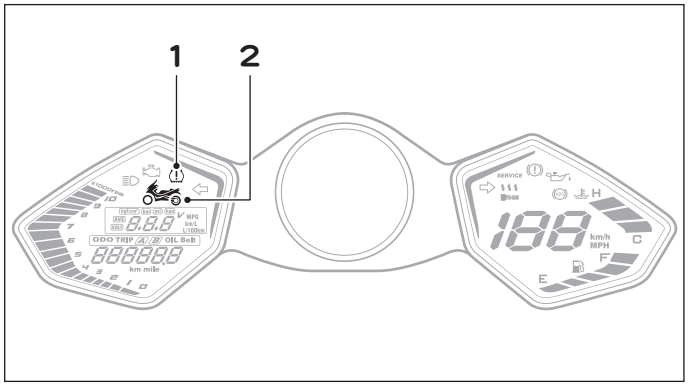

1: Tire Pressure Indicator 2: Model Symbol

TPMS Learn Code Operation:

- Applicable to owner and dealer service personnel.
- Re-adjustment of TPMS is required when replacing a new wireless tire pressure sensor and controller.
- When performing code learning, keep the vicinity clear of other vehicle or transmitter, to prevent miss-triggering.
- Confirm if the TPMS is installed properly, the tire pressure is adjusted correctly and the tires are mounted precisely.

Learn Code Activation Procedure:

1. Press and hold Operation Button (⌃ button on the Handlebar), but it is necessary to switch over to Dashboard position "m" in advance.

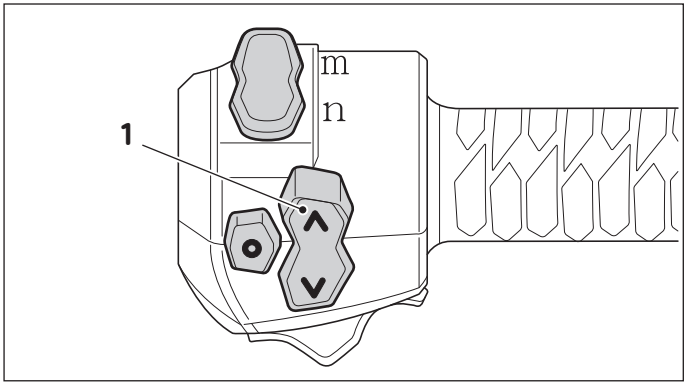

1: Operation Button

2. KEY ON the KEYLESS Main Switch.
3. Release the Operation Button (︿) when the front tire of the Model Symbol flashes and tire pressure unit disappears.
4. TPMS is now entered into Code Learning Mode.
5. The Front Tire in the Symbol flashes continuously.
6. Operator releases or inflates the Front Tire to get a pressure change > 3psi, the sensor will be awakened within 1 minute; setting of the front tire is complete when the pressure value appears.
   (If a Code Learn is not performed when the Front Tire flashes, press the UP button to jump to Rear Tire Code Learn. If a Code Learn is not accomplished within 2 minutes, the program exits Code Learn Mode.)
7. Now that the Rear Tire of the Model Symbol flashes continuously.
8. Operator releases or inflates the Rear Tire to get a pressure change > 3psi, the sensor will be awakened within 1 minute; setting of the rear tire is complete when the pressure value appears.
   (If a Code Learn is not performed when the Rear Tire flashes, press the UP button to exit Code Learn Mode. If a Code Learn is not accomplished within 2 minutes, the program exits Code Learn Mode.)
9. Now that the Front Tire flashes, the tire pressure value appears with unit displayed.

Attention

1. **Once you have your vehicle, inflate the tires to 20psi or more for the TPMS computer to automatically learn the initial values and facilitate the subsequent normal operation.**
2. **Re-do Code Learning after replacing parts.**
3. **When replacing a tire, care must be taken to avoid inserting a tool onto the nozzle as the TPMS is mounted at the nozzle location.**
4. **Make sure the direction is correct when replacing a part.**
5. **Tire Pressure values are for reference only.**
6. **Slackening of nut during parts installation will cause air leakage.**
7. **If tire pressure cannot be detected, the unit may be out of battery power and requires replacement of a new part.**

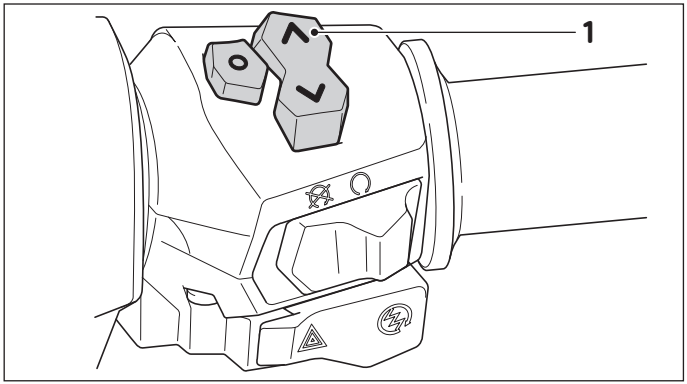

1: Change Pressure Unit Switch

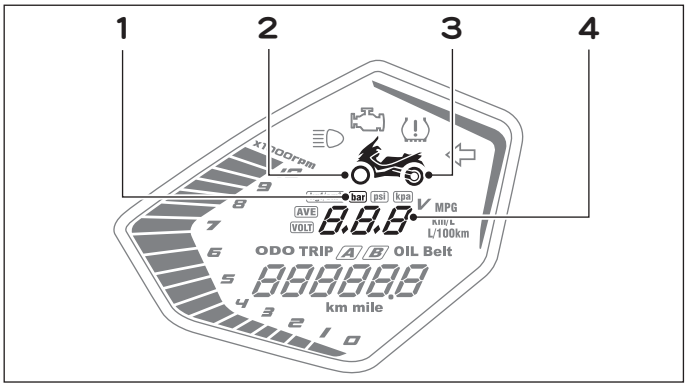

1: Pressure Unit
2: Model Front Wheel
3: Model Rear Wheel
4: Tire Pressure Display Zone

Change Pressure Unit

Turn KEYLESS Main Switch ON, the Model Symbol will light up. Push the Dashboard and noodoe Switch to "m" position and press the UP button to change over to TPMS Mode. Pressing "O" button on the Right Handlebar Switch to change units in the sequence of [kgf/cm^2 → bar → psi → kpa].

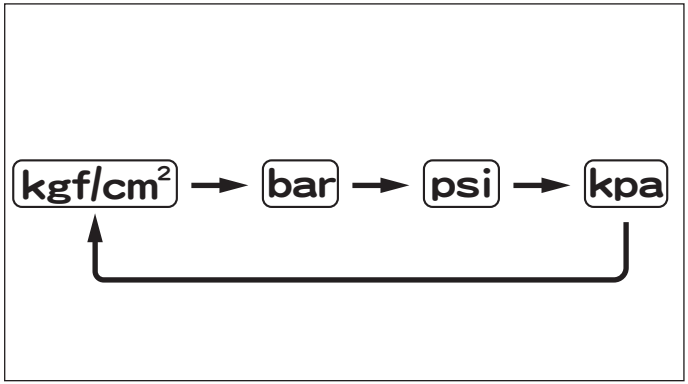

■ **Anomaly:**

1. With Main Switch set to ON, when Tire Pressure Indicator in the Dashboard lights up continuously, it may be due to a pressure > 3.2 kgf/cm^2 or < 1.6 kgf/cm^2 of Front Tire; or a pressure > 3.75 kgf/cm^2 or < 1.65 kgf/cm^2 (23.4psi) of Rear Tire. Change over to TPMS Mode by pressing the Mode button, the tire pressure value will be flashing.
2. Tire Pressure Indicator will light up continuously if controller is faulty. Change over to TPMS Mode by pressing the Mode button, the Err symbol will appear.

3. Tire Pressure Indicator will light up continuously if signal of tire pressure sensor fails to reach the controller due to environmental interference. Change over to TPMS Mode by pressing the Mode button, - - - will appear.
4. Tire Pressure Indicator flashes quickly if tire pressure drops fast; it flashes slowly if tire pressure drops slowly.

ABS (Anti-lock Braking System)

ABS Brake Indicator:

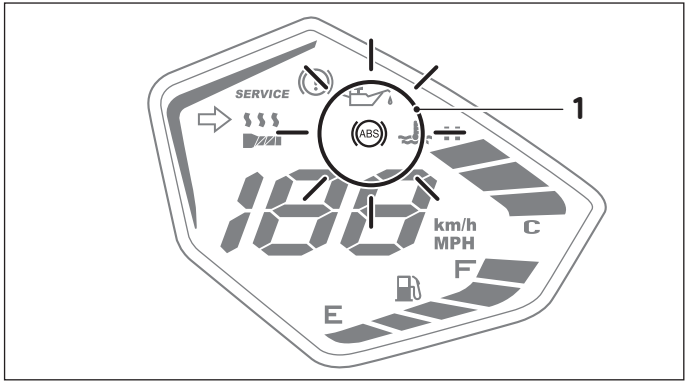

1: ABS Indicator

ABS is a double electronic control system capable of controlling front and rear brakes respectively. When ABS is activated, the rider can feel pulses acted by ABS on the handlebar; in which case the rider needs to hold the handlebar constantly, without "press-and-releasing" it, or the ABS effect may be diminished.

The ABS Brake Indicator situates on the left upper corner of Dashboard (as shown in the figure); it lights up when the Main Switch is activated and does not go off automatically. The ABS Brake Indicator only goes off when engine is started and vehicle runs above 6km/hr.

Attention

ABS is controlled by ECU; if ABS fails, the ABS Brake Indicator will light up; ABS may lose its function, but the original brake still works; the ABS resumes normal braking functionalities.

Attention

- **When riding on a rough or pebbled road surface, effective ABS braking distance will become longer.**
- **Always keep a proper safety distance with preceding vehicles while riding a scooter.**
- **ABS gives optimal performance with a longer braking distance.**
- **To avoid deterioration of ABS performance, do not remove or damage the wheel sensor or the rotor of wheel sensor.**
- **When activating power of KEYLESS Main Switch, or when vehicle speed exceeds 6 km/h, ABS will execute a self-diagnosis. During this self-diagnosis session, a vibration may be felt on the Brake Lever if you pull it gently, which is a normal phenomenon.**

In the event of an emergency brake in response to a special road condition, ABS system helps preventing a locked wheel resulting from the sudden braking action, allowing the rider being able to steer the vehicle smoothly. An ABS system controls the braking force automatically to prevent the tire from skidding.

An ABS system will not shorten braking distance in the following conditions: when running on a soft and unleveled road or a descending slope, the braking distance is even longer than a vehicle without ABS. Therefore models with ABS have the optimal performances on flat road surfaces.

An ABS System comprises an ABS ECU and front and rear tire speed sensors. Using tires not conforming to original specifications may affect the detection of speed sensors and result in abnormal ABS activation.

WARNING

- **Using tires not conforming to original size specifications may result in malfunctioning of the ABS system, or even an accident of the rider due to malfunctioned activation of the Anti-lock Braking System. Therefore it is a must that you use tires conforming to KYMCO specifications.**
- **When ABS activates, you may feel a light vibration on the Brake Lever, which is a normal phenomenon.**
- **When vehicle speed is below 6 km/h, the ABS system will not activate.**
- **ABS will not work when power is out or the system malfunctions, and ABS indicator will light up.**