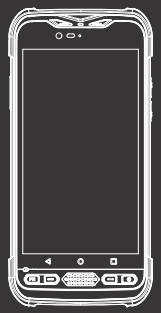

Quick Start Guide

Insert Battery

To insert the battery

4. Push the battery cover lock to the close position

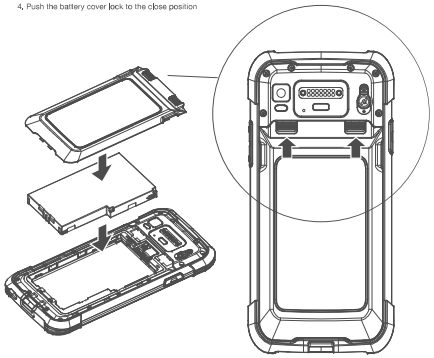

Remove Battery

To remove the battery

1. Power off the device before removing the battery
2. Push the battery cover lock to the open position

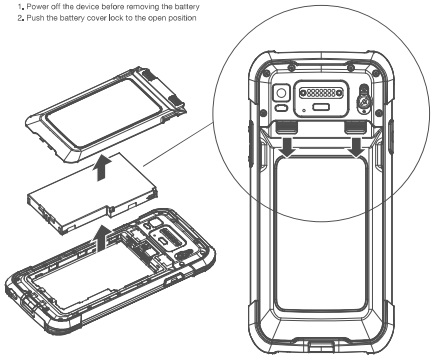

Remove Battery

To remove the battery

3. Detach the battery cover
4. Push the battery lock to the open position
5. Remove the battery

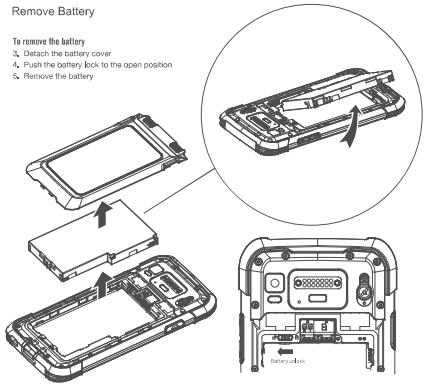

Version 1.0

① WHAT'S IN THE BOX

The pictures shown below may differ from the actual products.
To purchase additional or optional products, contact our customer center.

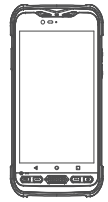

Device

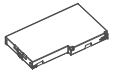

Standard battery

Charging adaptor

Type-C cable

Converter plugs

Appearance overview

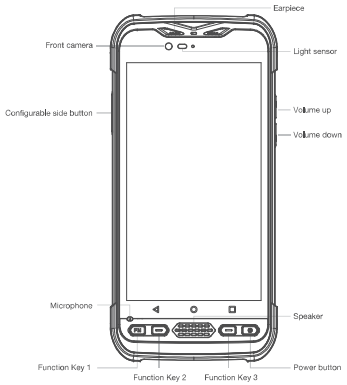

Appearance overview

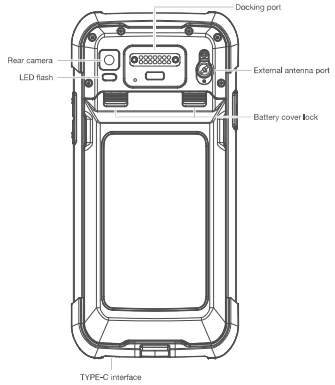

Sim/micro SD Card

This is how you insert and remove the SIM/micro SD.

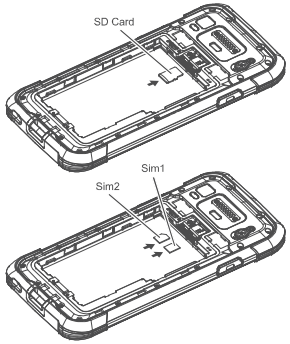

To insert the battery

1. Insert the battery
2. Push the battery lock to the close position
3. Attach the battery cover

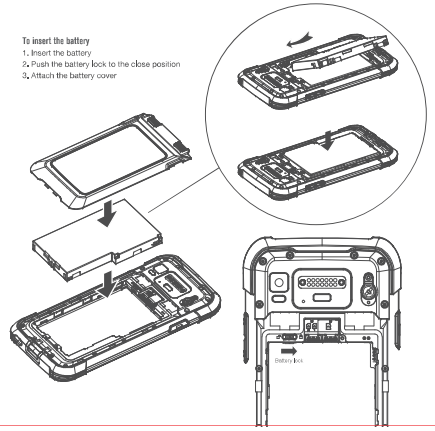

FCC Caution.

a、§ 15.19 Labeling requirements.

This device complies with part 15 of the FCC Rules. Operation is subject to the following two conditions: (1) This device may not cause harmful interference, and (2) this device must accept any interference received, including interference that may cause undesired operation.

b、§ 15.21 Changes or modification warning. Any Changes or modifications not expressly approved by the party responsible for
compliance could void the user's authority to operate the equipment.

c、§15.105 Information to the user. Note: This equipment has been tested and found to comply with the limits for a Class B digital device, pursuant to part 15 of the FCC Rules. These limits are designed to provide reasonable protection against harmful interference in a residential installation. This equipment generates uses and can radiate radio frequency energy and, if not installed and used in accordance with the instructions, may cause harmful interference to radio communications. However, there is no guarantee that interference will not occur in a particular installation. If this equipment does cause harmful interference to radio or television reception, which can be determined by turning the equipment off and on, the user is encouraged to try to correct the interference by one or more of the following measures:

-Reorient or relocate the receiving antenna.

-Increase the separation between the equipment and receiver.

-Connect the equipment into an outlet on a circuit different from that to which the receiver is connected.

-Consult the dealer or an experienced radio/TV technician for help.

d、Specific Absorption Rate (SAR) information:

This GSM Mobile Phone meets the government's requirements for exposure to radio waves. The guidelines are based on standards that were developed by independent scientific organizations through periodic and thorough evaluation of scientific studies. Thestandards include a substantial safety margin designed to assure the safety of all persons regardless of age or health.

e、FCC RF Exposure Information and Statement

The SAR limit of USA (FCC) is 1.6 W/kg averaged over one gram of tissue. Device types: UT12P (FCC ID: 2AOPD-UT12P) has also been tested against this SAR limit. The highest SAR value reported under this standard during product certification for use at the ear is 0.403W/kg and when properly worn on the body is 1.097W/kg. This device was tested for typical body-worn operations with the back of the handset kept 10mm from the body. To maintain compliance with FCC RF exposure requirements, use accessories that maintain a 10mm separation distance between the user's body and the back of the handset. The use of belt clips, holsters and similar accessories should not contain metallic components in its assembly. The use of accessories that do not satisfy these requirements may not comply with FCC RF exposure requirements, and should be avoided.

Body-worn Operation

This device was tested for typical body-worn operations. To comply with RF exposure requirements, a minimum separation distance of 10mm must be maintained between the user's body and the handset, including the antenna. Third-party belt-clips, holsters, and similar accessories used by this device should not contain any metallic components. Body-worn accessories that do not meet these requirements may not comply with RF exposure requirements and should be avoided. Use only the supplied or an approved antenna.

The manufacturer ensures that the frequency stability of this U-NII device can maintain transmission within the operating frequency band under all normal operating conditions.