PaceMaster®

R20 SPORT TREADMILL USER MANUAL

Model Number: PM810
Activate Your Warranty: www.pacemaster.com/registration

IMPORTANT: READ AND SAVE THIS MANUAL

Customer Service Team:
888-699-8918
www.pacemaster.com/help
support@pacemaster.com

TABLE OF CONTENTS

Before You Begin	4
Important Safety Instructions	5-6
Assembly Basic Assembly Tips Assembly Steps	7-11
Treadmill Operation and Adjustments Console Overview Screen Overview Using The Safety Key Moving The Treadmill	12-17
Heart Rate Monitor	18
Maintenance	19-20
Troubleshooting	21-22
Parts List	23
Exploded Diagrams	24-26
Warranty Information	27
Ordering Replacement Parts	28

BEFORE YOU BEGIN

Thank you for selecting PaceMaster R20 Sport Treadmill. Read this manual carefully before using the treadmill. If you have questions after reading this manual, please contact us.

TREADMILL TERMS

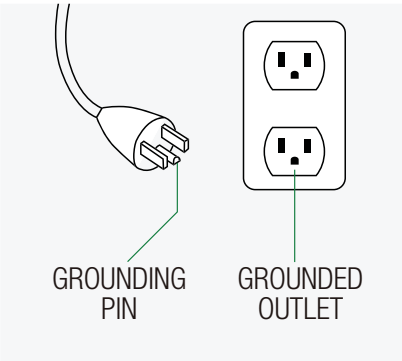

IMPORTANT SAFETY INSTRUCTIONS

WARNING:

To reduce the risk of burns, fire, electric shock, or injury to persons, read all important precautions and instructions in this manual before assembling your treadmill and before using your machine. PaceMaster assumes no responsibility for personal injury or property damage sustained by or through the use of this product.

It is the responsibility of the owner to ensure that all users of this treadmill are adequately informed of all warnings and precautions.

This equipment is rated and designed for in-home use. Non-residential use may impact the product warranty.

Set up and use the treadmill indoors and keep it away from humid environments, i.e. swimming pools, hot tubs, etc.

Place the assembled treadmill on a flat surface, with at least 2.4 meters (7.9 feet) of space behind it and 0.6 meters (2 feet) on either side. Do not position the treadmill in a location that will block ventilation openings. Place the treadmill on a mat to avoid marks to floors and carpets.

Do not operate the treadmill where aerosol products are used or where oxygen is being administered.

Warning: Power outlet must be properly grounded to use the treadmill. In the event of a malfunction or damage, grounding provides electric current with a path of least resistance, reducing the risk of electric shock.

Use a surge protector (not included) and an appropriate outlet to connect the power supply to the treadmill. Avoid plugging other electrical devices into the surge protector or into an outlet on the same circuit. Failure to use a properly functioning surge protector could result in damage to the control system of the treadmill, which could result in a fall and serious injury.

Keep the power cord and the surge protector away from heated surfaces.

Until the treadmill is fully and properly assembled, do not attempt to raise, lower, or move the treadmill.

Before starting any exercise program, consult your doctor, particularly if you are over the age of 35 or have any pre-existing health issues or conditions.

Do not allow children under the age of 12 or pets near the treadmill. Children over the age of 12 should not use the treadmill without proper adult supervision.

The treadmill is not intended for use by persons with reduced physical, sensory, or mental capabilities or lack of experience and knowledge, unless they have been given supervision or instruction concerning use of the treadmill by someone responsible for their safety.

The treadmill is to be used by only one person at a time.

The maximum weight bearing capacity of the treadmill is 330 lbs. (150 kg).

Keep fingers, hair, and clothing away from the moving walking belt.

Wear only appropriate running shoes and clothing on the treadmill. Do not use the treadmill with barefoot, while wearing only socks, or while wearing sandals. For your safety, never use the treadmill while wearing loose-fitting clothing that could become caught in the treadmill.

Read, understand, and test the emergency stop procedure before using the treadmill. Always wear the Safety Key while using the treadmill.

Start slowly. Step onto the platform only at the treadmill's lowest belt speed. Walk before you run; only gradually increase the speed of the treadmill.

If you feel ill or dizzy or experience pain while training, stop exercising and immediately consult a medical professional.

The heart rate monitor is not a medical device.

Various factors, including your movement, may affect the accuracy of heart rate readings.

Do not leave the treadmill unattended when it is powered on. When the treadmill is not in use, turn the power switch off and/or unplug the power cord.

Do not insert any object nor allow any object to fall into any openings on the treadmill.

Check and adjust all treadmill parts before using the machine. Worn or damaged parts must be replaced immediately.

Never move the running belt while the power is off. Do not operate the treadmill if the power cord or plug is damaged, or if the treadmill is not working properly.

Unplug the treadmill from power outlet before cleaning, performing maintenance, or making adjustments. Do not remove the motor cover.

Do not attempt to repair your treadmill without professional guidance. If your treadmill experiences any issues, please contact our Customer Service Team. Do not operate the treadmill if it is not working properly.

CAUTION : The user is cautioned that changes or modifications not expressly approved by the party responsible for compliance could void the user's authority to operate the equipment.

This device complies with Part 15 of the FCC Rules and Industry Canada licence-exempt RSS standard(s). Operation is subject to the following two conditions:
(1) this device may not cause harmful interference, and
(2) this device must accept any interference received, including interference that may cause undesired operation.

Le présent appareil est conforme aux CNR d'Industrie Canada applicables aux appareils radio exempts de licence. L'exploitation est autorisée aux deux conditions suivantes :

(1) l'appareil ne doit pas produire de brouillage, et

(2) l'utilisateur de l'appareil doit accepter tout brouillage radioélectrique subi, même si le brouillage est susceptible d'en compromettre le fonctionnement.

NOTE : This equipment has been tested and found to comply with the limits for a Class B digital device, pursuant to Part 15 of the FCC Rules. These limits are designed to provide reasonable protection against harmful interference in a residential installation. This equipment generates, uses and can radiate radio frequency energy and, if not installed and used in accordance with the instructions, may cause harmful interference to radio communications. However, there is no guarantee that interference will not occur in a particular installation.

If this equipment does cause harmful interference to radio or television reception, which can be determined by turning the equipment off and on, the user is encouraged to try to correct the interference by one or more of the following measures:
-- Reorient or relocate the receiving antenna.
-- Increase the separation between the equipment and receiver.
-- Connect the equipment into an outlet on a circuit different from that to which the receiver is connected.
-- Consult the dealer or an experienced radio/TV technician for help.

FCC& IC Radiation Exposure Statement:

This equipment complies with FCC and Canada radiation exposure limits set forth for an uncontrolled environment. This equipment should be installed and operated with a minimum distance of 20cm between the radiator and your body.
This transmitter must not be co-located or operating in conjunction with any other antenna or transmitter.

Déclaration d'IC sur l'exposition aux radiations:

Cet équipement est conforme aux limites d'exposition aux radiations définies par le Canada pour des environnements non contrôlés. Cet équipement doit être installé et utilisé à une distance minimum de 20 cm entre l'antenne et votre corps.
Cet émetteur ne doit pas être installé au même endroit ni utilisé avec une autre antenne ou un autre émetteur.

ASSEMBLY

BASIC ASSEMBLY TIPS

- Read and understand the "Important Safety Instructions" before assembly.
- Keep bystanders and children away from the product you are assembling at all times.
- Do not connect power to the machine until instructed to do so.
- Review assembly steps and organize all the pieces necessary before starting.

HARDWARE KIT

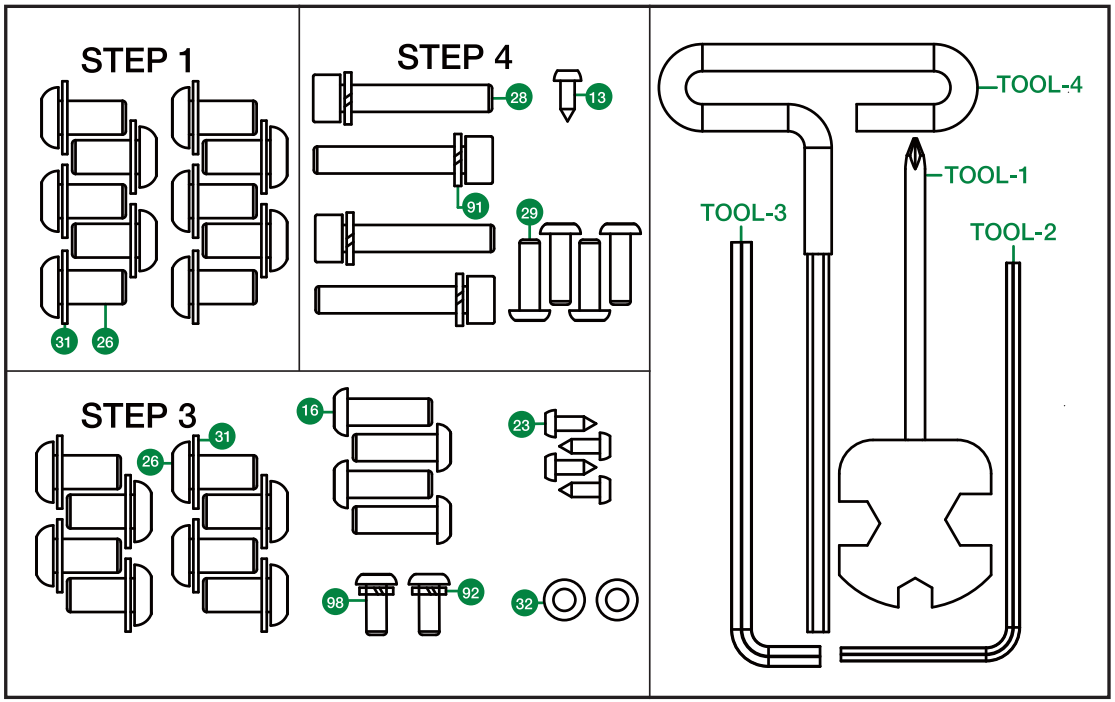

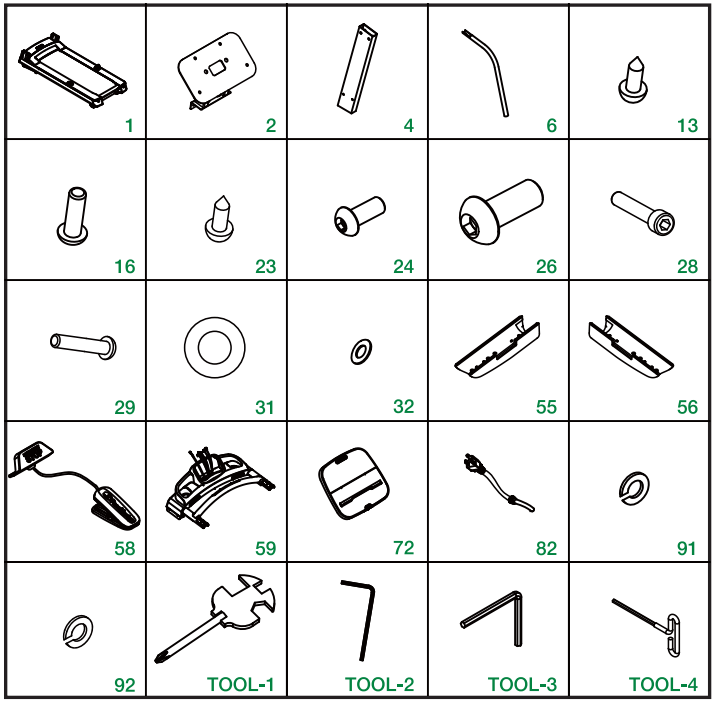

STEP 1

1. Route line A-1 through the upright columns (4) and expose the connector.
2. Connect the wire A to A-1 as shown.
3. Insert the upright columns (4) into the main frame (1) and secure it with the wrench TOOL-3; fix with screw (26) and washer (31), do not completely tighten these screws yet.

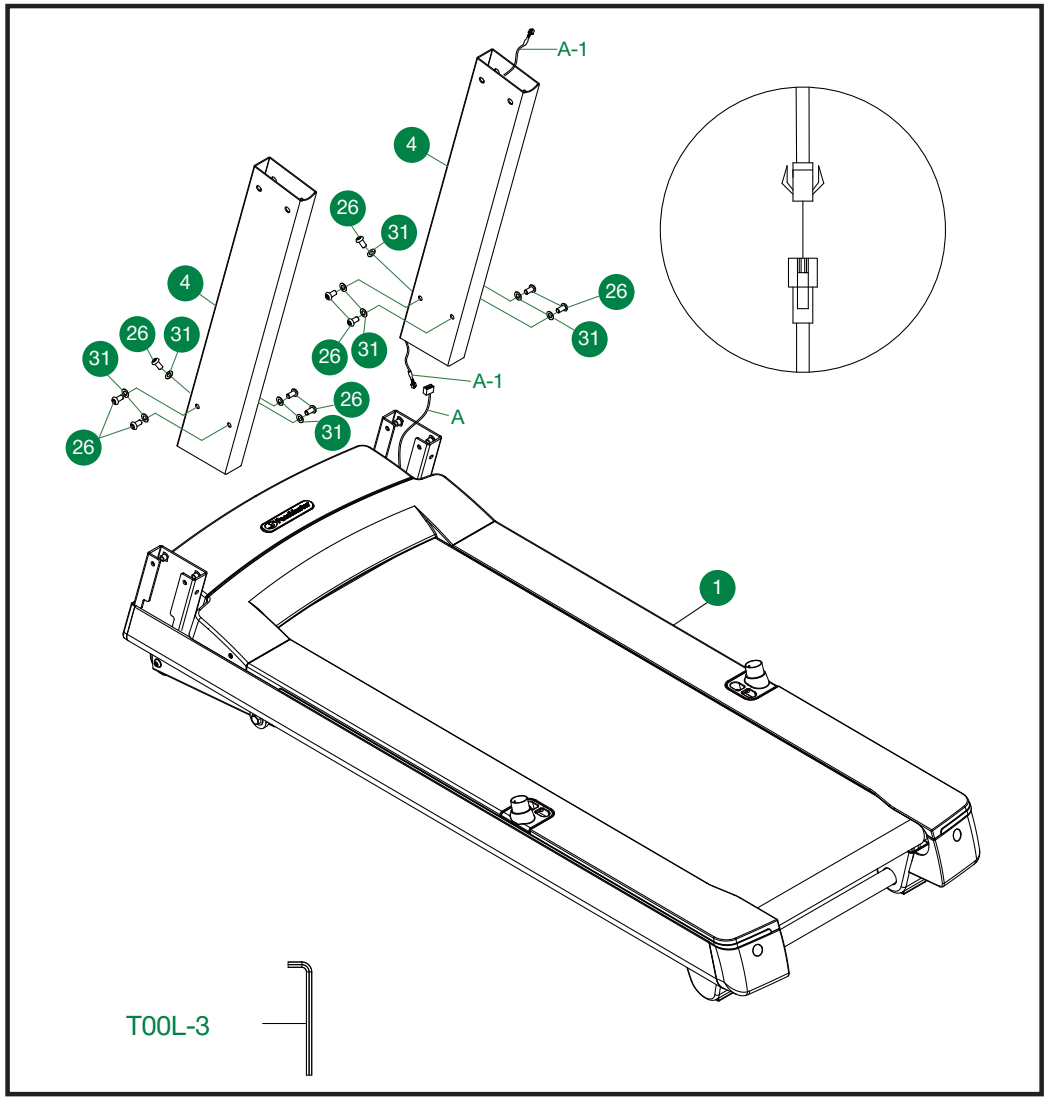

STEP 2

1. Connect wires A-1 and A-2 as shown.
2. Place the console (59) in the upright columns (4).

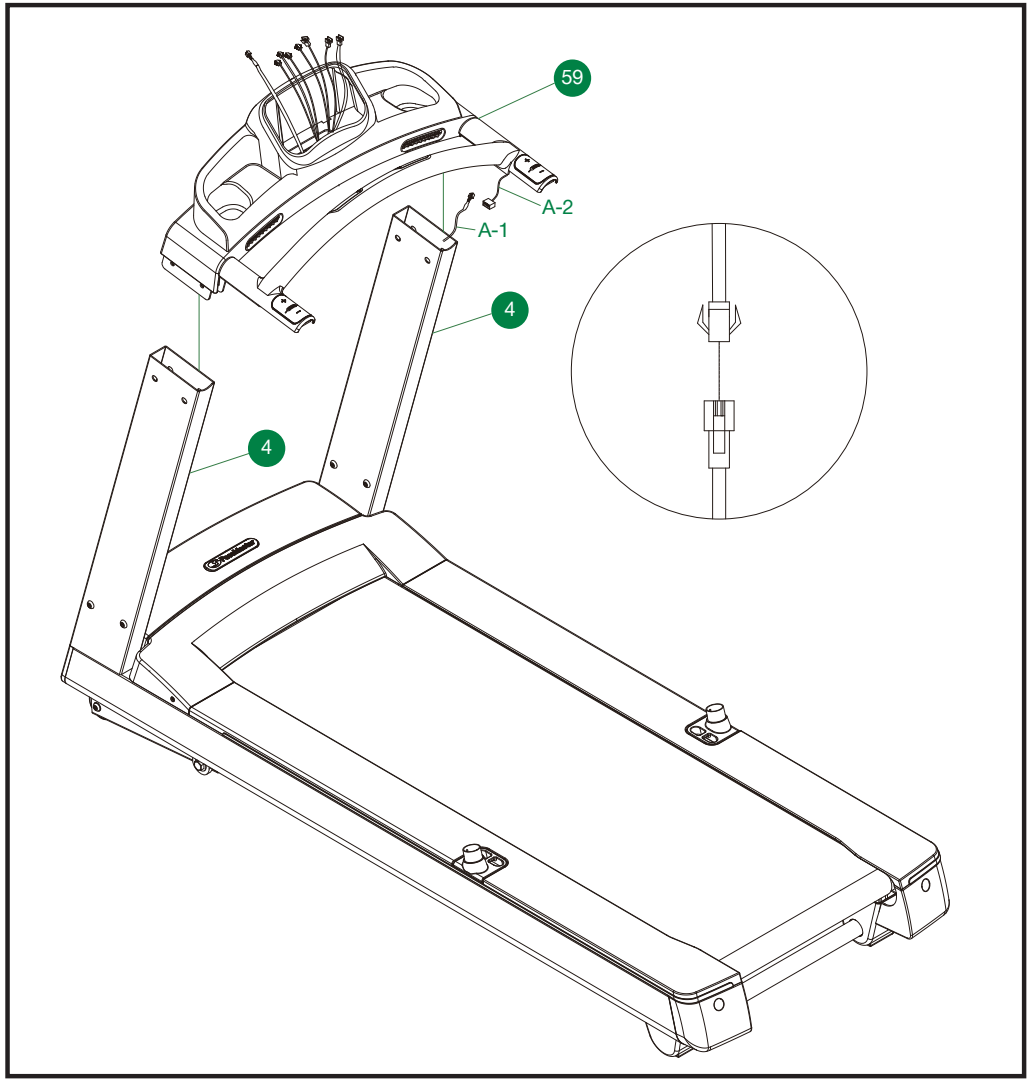

STEP 3

1. Match up the handrails (6) with the console (59) and main frame (1) and use the hexagon socket head bolts (98) spring washer (92) and curved washer (32) to secure the handrail (6) to the main frame assembly (1) using wrench TOOL-2.
2. Use wrench TOOL-2 to fit the hexagon socket head bolts (16) to lock the left grip (55) onto the console (59).
3. Use the wrench TOOL-1 with Phillips pan head tapping screws (23) to lock the left grip (55) into the console (59).
4. Use wrench TOOL-2 with hexagon socket head bolts (16) to lock the right grip (56) into the console (59).
5. Use wrench TOOL-1 with Phillips pan head tapping screws (13) to lock the right grip (56) into the console (59).
6. Use wrench TOOL-3 with hexagon socket head bolts (26) and flat washer (31) to lock the (59) into the upright columns.
7. Tighten all the above screws.

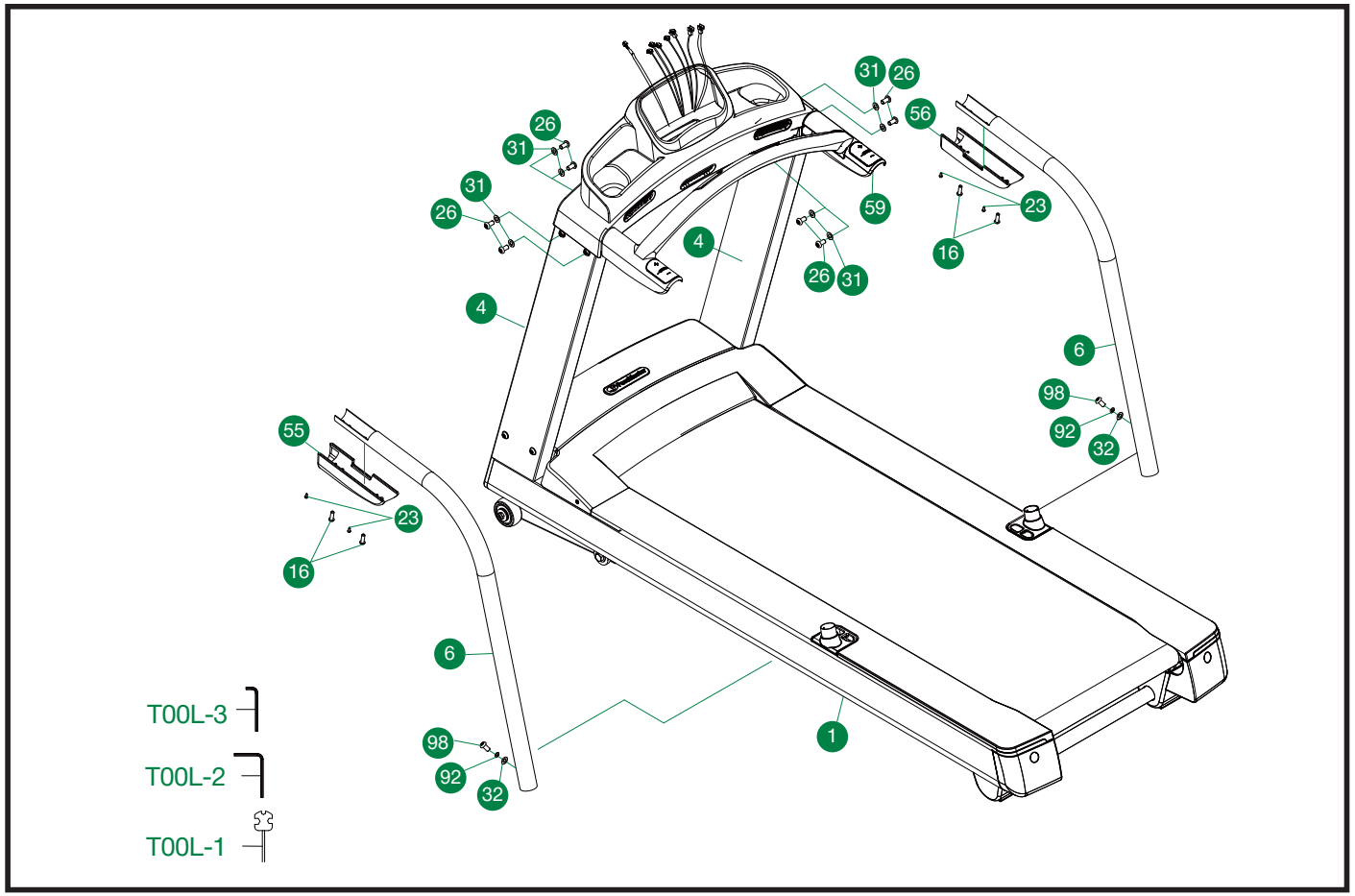

STEP 4

1. Insert the electronic cable line through the display device holder (2) and secure the display device (72) with wrench TOOL-2 and hexagon socket head bolts (29).
2. Secure the D wire to the display device holder (2) with TOOL-1 and Phillips pan head tapping screws (13).
3. Connect A, B, C and E wires as shown.
4. Use wrench TOOL-3 with hexagon socket head bolts (28) and a spring washer (91) to secure the display device (72) to the console (59).
5. Connect the fully assembled treadmill to power via an appropriate outlet. The treadmill requires a connection to a 3-pole grounded outlet connected to an (at minimum) 15-amp breaker. Consult a professional electrician to install an appropriate outlet if none exists.

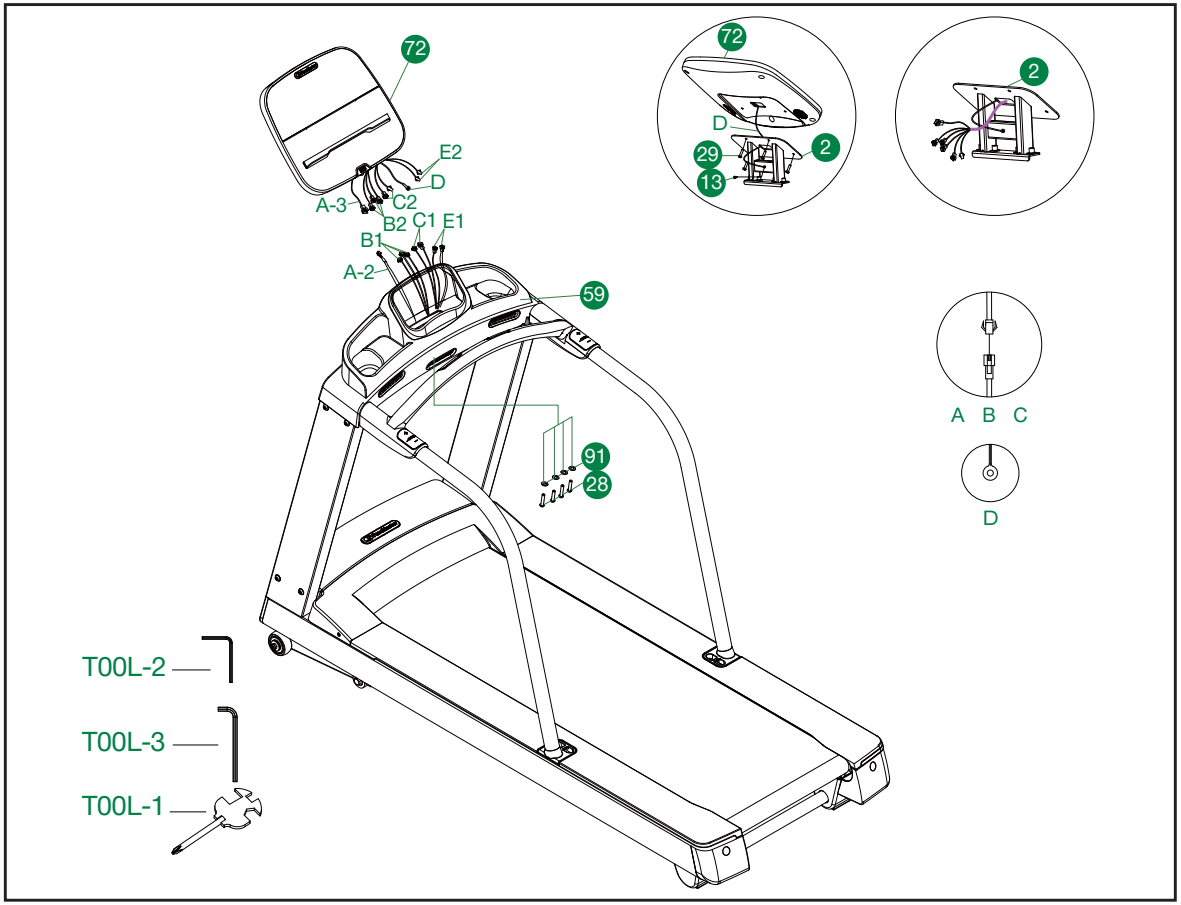

TREADMILL OPERATION AND ADJUSTMENTS

CONSOLE OVERVIEW

DISPLAY SCREEN

QUICKTAP™
SPEED BUTTONS

QUICKTAP™
INCLINE BUTTONS

FAN SWITCH BUTTON
WITH INDICATOR LIGHTS

INFORMATION BUTTON

SPEED BUTTONS

INCLINE BUTTONS

BLUETOOTH® BUTTON
WITH INDICATOR LIGHT

SAFETY KEY

START, PAUSE, & STOP BUTTONS

SCREEN OVERVIEW

START SCREEN

Default starting screen is set up to allow for quick workout start.

LOGIN / ACCOUNT CREATION

Login is optional. To log in, tap the "ME" button on the screen and follow the prompts. Please create an account on Rüht app. Then click"LOGIN" and enter your account and information and click "LOGIN". You will then be logged in and the screen will return to the Start Screen.

If you do not have an account, click "Create an account" and follow the account creation prompts.

Account login is not required to use the treadmill. However, in order to save your workout information login is required.

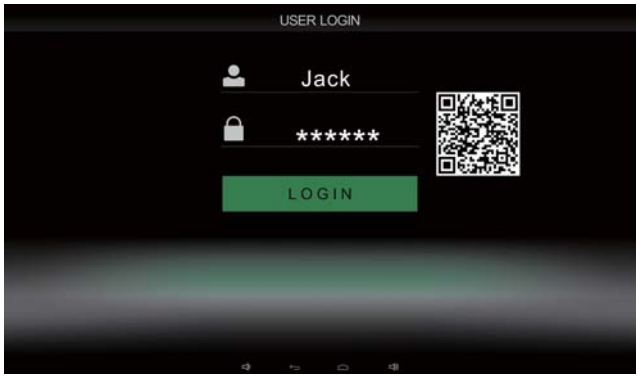

BASIC WORKOUT CONSOLE OPERATIONS

- Press the "START" button: Treadmill ready to start, with a sound prompt. The default start speed is 0.5 mph and the default start incline is 0.
- Press the "PAUSE" button to temporarily stop the treadmill. The Pause Screen will appear.
- If you press the "START" when the treadmill is paused the treadmill will reset to 0 speed and incline.
- Use the "QUICKTAP™ INCLINE" and "QUICKTAP™ SPEED" buttons on the console to quickly select specific workout levels.

ADJUSTING WORKOUT LEVELS

You can adjust your workout to the precise level and intensity you desire:

First, select the "WORKOUT" button on the screen. Then toggle through the "TIME", "DISTANCE", "CALORIES", and other options to adjust your specific workout levels.

Adjust the custom levels by either pressing "+" and "-" or by sliding the color band with your finger.

When you've entered your customized workout goals, press "START" to begin your workout.

PREPROGRAMMED WORKOUTS

To select a preprogrammed workout, select "WORKOUT" on the screen, then select "PROGRAM". You'll then be able to see the different program levels: first, select the workout category you'd like to use. Then you will see the specific workout levels (they vary in intensity and settings). After you've selected a preprogrammed workout, press the "START" button to begin your workout.

USER-DEFINED PROGRAM

When you are logged into an account you can save workouts and quickly select saved workouts. To find a saved workout, select the "USER-DEFINED" button inside Workout, then you will see the workouts that are saved to your account. To save a workout, press the "SAVE" button to record your current speed and incline.

ENTERTAINMENT AND MEDIA

Press the "MULTI-MEDIA" button to select between the

"Music", "Video", and "Picture" functions.

HEART-RATE MONITORING

To use the Heart Rate Monitors, grip the pulse sensors on both handrails. Your pulse rate will display on the screen after several seconds.

APP

Press the "APP" button to connect to your App. You will need access to Wi-Fi in order to connect to the App.

SETTINGS

Press the "SETTINGS" button to enter the settings interface. Here you'll be able to set and adjust the Wi-Fi, Bluetooth®, language mode, units of measurement, UI skin, sound, and other system settings. You'll also - have access to the document management and Android settings; however, adjusting any Android settings is not recommended.

WORKOUTATA

When the treadmill is in a standby status, tap the "ME" icon to access workout data.

USING THE SAFETY KEY

HOW TO USE THE SAFETY KEY AND TEST THE EMERGENCY STOP

1. Adjust the length of the Safety Key cord. It should be long enough that when it is inserted into the console and clipped onto your clothes you can correctly use the treadmill without dislodging the Safety Key.
2. Attach the clip to a convenient area on your clothing such as a waistband or shirt hem. Insert the key into the correct area on the treadmill's console.

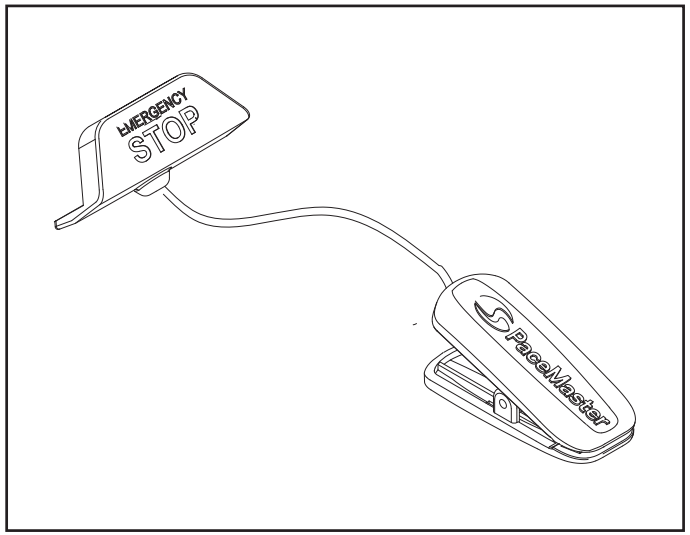

3. IMPORTANT: Test the clip by carefully taking a few steps backward; if the key does not pull out of the console for an emergency stop adjust the position of the clip or the length of the cord. The Safety Key must be correctly adjusted in order to work correctly in an emergency situation.
4. Always use the Safety Key correctly during treadmill workouts.

MOVING THE TREADMILL

CAUTION Use extreme caution while moving the treadmill to avoid injury.

1. Unplug power cord. Grip the treadmill underneath the back end by the cross-bar; carefully raise the treadmill's back end.
2. When the treadmill is tilted up enough to be weighted entirely on the front transport wheels, carefully move the treadmill.
3. When situated, carefully lower the treadmill.

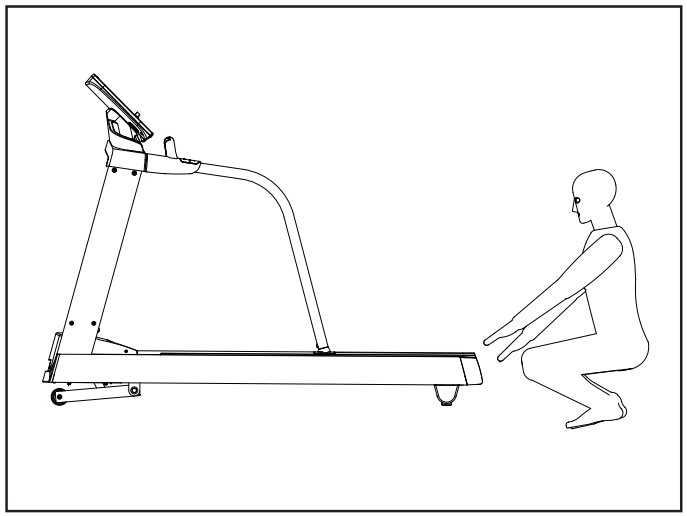

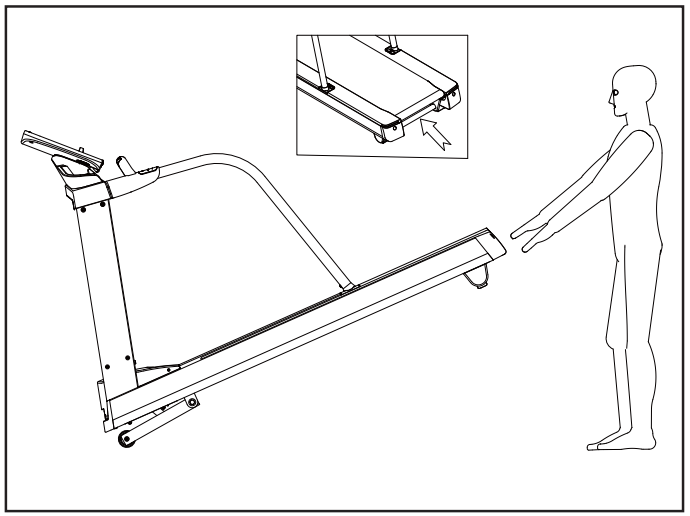

HEART RATE MONITOR

WARNING:

Do not use the heart rate monitor if you have an implanted medical device such as a pacemaker: be sure to check with your physician prior to using the heart rate monitor if you have an implanted medical device such as a pacemaker.

The heart rate monitor is specially designed for accuracy, comfort, and durability. To get the best performance from the heart rate monitor, please read the instructions below.

HOW TO PUT ON THE HEART RATE MONITOR

The heart rate monitor consists of two components: the chest strap and the transmitter. Follow the steps below to put on the heart rate monitor.

1. Insert the tab on one end of the chest strap through one end of the transmitter and attach it.
2. Wrap the heart rate monitor around your chest and attach the other end of the chest strap to the transmitter. If necessary adjust the length of the chest strap. The heart rate monitor should be under your clothing, against your skin, and as high under the pectoral muscles or breasts as is comfortable.
3. Pull the transmitter away from your body a few inches and locate the two electrode areas on the inner side. Wet both electrode areas. Return the transmitter to a position against your chest.

USING THE HEART RATE MONITOR

1. Make sure that the heart rate monitor is under your clothing, against your skin, and as high under the pectoral muscles or breasts as is comfortable.
   Note: If the heart rate monitor does not function when positioned as described, try moving it slightly lower or higher on your chest.
2. Moisten the two electrode areas on the transmitter with saline solution. If heart rate readings do not appear until you begin perspiring, re-wet the electrode areas.
3. For the console to display heart rate readings, the user must be within arm's length of the console.
4. The heart rate monitor is designed to work with people who have normal heart rhythms. Heart rate reading problems may be caused by medical conditions such as premature ventricular contractions (pvcs), tachycardia bursts, and arrhythmia.
5. The operation of the heart rate monitor can be affected by magnetic interference caused by high power lines or other sources. If it is suspected that magnetic interference may be causing a problem, try relocating the treadmill.
6. If the heart rate monitor still does not function properly, test it by having another person try it.
7. The battery may need to be replaced.

HEART RATE MONITOR CARE AND MAINTENANCE

- Thoroughly clean and dry the heart rate monitor after each use. The heart rate monitor is activated when the electrode areas are wetted and the heart rate monitor is put on; the heart rate monitor shuts off when it is removed and the electrode areas are dried. If the heart rate monitor is not dried after each use, it may remain activated longer than necessary.
- Store the heart rate monitor in a warm, dry place. Do not store the heart rate monitor in a plastic bag or other container that may trap moisture.
- Do not expose the heart rate monitor to direct sunlight for extended periods of time. Do not expose the heart rate monitor to temperatures above 122º Fahrenheit (50º Celsius) or below 14º Fahrenheit (-10º Celsius).
- Do not excessively bend or stretch the transmitter when using or storing the heart rate monitor.
- Clean the transmitter using water and mild soap. Never use alcohol, abrasives, or chemicals. The chest strap may be hand washed and air dried.

MAINTENANCE

BELT CARE AND LUBRICATION

You must lubricate your treadmill belt annually (or more often if your treadmill is heavily used) in order to keep vital treadmill parts including the deck, belt, motor, and motor controller from prematurely wearing out. Annual lubrication is required to maintain the product warranty. Lubricating your treadmill can also help it run more quietly and reduce friction between the belt and the treadmill deck.

HOW TO ASSESS YOUR TREADMILL'S BELT

The area between the running deck and the running belt has been pre-lubricated. Excessive friction can seriously decrease the treadmill's performance, so regular assessment and lucubration is essential: check the treadmill's lubrication levels regularly.

1. Unplug the power cord.
2. Inspect belt and deck by placing your hand between the belt and deck. The deck should be smooth. The belt should have a consistent feel from side to side (a belt can be worn out without any sensory signs of a problem). If you feel deep grooves in the deck or uneven wear on the underside of the belt, part replacement is necessary. Continued use of your treadmill may damage the treadmill.
3. If your treadmill has an excessive accumulation of dirt and contaminants you must clean them out. If these aretrapped during the belt lubrication process, significant damage will occur. Do NOT apply lubricant if the re are contaminants under the belt. Contact a Certified Service Provider for service if contaminant removal is necessary.

LUBRICATION SCHEDULE

- **Light Use: Apply lubricant once a year**
  (Treadmill is used less than 3 hours per week)
- **Regular Use: Apply lubricant every 6 months**
  (Treadmill used up to 5 hours per week)
- **Heavy Use: Apply lubricant every 3 months**
  (Treadmill used more than 5 hours per week)

LUBRICATING YOUR TREADMILL

1. Lift the running belt and inject 0.5 oz. of treadmil l lubr icant across the runn ing board. Do not put any lubrica nt on any surface with which your feet make contact. The lubricant will spread evenl y in the next step. Do not apply or spread the lubr icant by hand.
2. Run the treadmill at the speed of 2 mph for 3 minutes to fully permeate the lubricant (every treadmill has a bottle of lubricant).

3. Using your treadmill's handrails and safety switch for safety and support, walk on the treadmill at 2-3 mph. CAUTION: BELT MAY HESITATE. THIS CAN CAUSE INJURY IF BELT IS NOT PROPERLY TENSIONED. Within 5 minutes the lubricant will be preliminarily walked into the backing of the belt. Damage and/or injury may occur if the belt is not properly centered and tensioned (refer to the Troubleshooting section of the user manual if needed).

CAUTION: Do not run on the treadmill until you are certain the belt tension and centering is correct according to your owner's manual specifications. Make certain that there are no friction spots that may cause belt hesitation. Injury can occur if belt is not adjusted properly.

HOW TO CLEAN THE TREADMILL

1. Always unplug the treadmill before cleaning it.
2. Dust out the treadmill regularly and keep all parts clean. Clean both sides of the belt to avoid dust accumulation under the belt. If needed, use a damp soapy cloth to gently wipe the surface. Don't splash water onto any part of the treadmill.
3. If there is excessive dirt under the running belt or inside the treadmill contact a Certified Service Provider for service or assistance.

TROUBLESHOOTING

SYMPTOMS AND SOLUTIONS

Most treadmill problems can be resolved quickly using the following steps. If there is a problem that you cannot easily solve, contact our Customer Service Team.

A. SYMPTOM

Sudden changes in speed while using the treadmill.

SOLUTION

The running belt can become slack from use, causing the belt to slip. Adjust belt tension right away:

1. Press the STOP button.
2. Unplug the power cord.
3. You can tell if the belt is too loose or tight by gently lifting the belt away from the platform. There should be between 2-3 inches of space.
4. If the belt is too loose adjust the belt. Use a socket head wrench to adjust the rear roller adjustment bolts, turning each bolt clockwise ¼ turn. If necessary, repeat by ¼ turns until the running belt has correct belt tension.

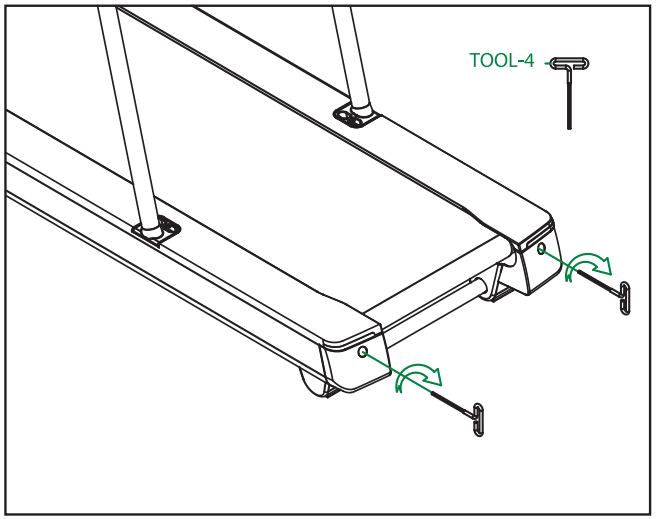

B. SYMPTOM

The distance between the running belt and the sides of the platform is uneven.

SOLUTION

1. Run the treadmill while you stand behind it.
2. If the running belt deviates to the left, turn the left hexagon socket head bolt (11) clockwise ½ turn. If the running belt deviates to the right, turn the right hexagon socket head bolt (11) clockwise ½ turn.
3. Adjust as needed to center the belt, but be careful not to cause excess tension on the running belt.

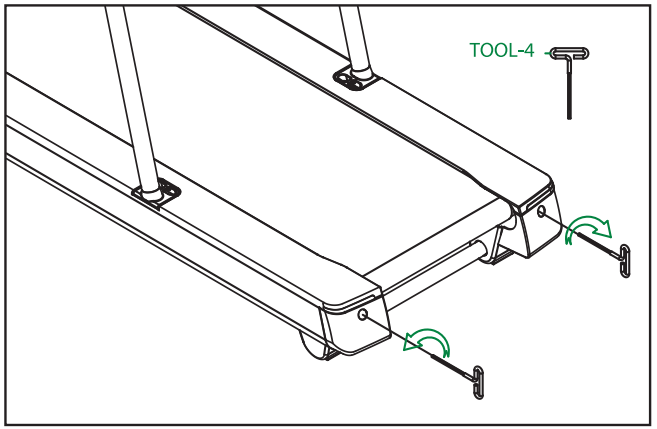

C. SYMPTOM

Treadmill will not power on.

SOLUTION

1. Verify that the power cord is plugged into a functional power outlet.
2. Make sure the power switch is set to ON. To reset the power, turn the power switch off, wait five minutes, and turn the switch back on.
3. Check that the Safety Key is correctly inserted into the console.

D. SYMPTOM

Sudden power loss while running.

SOLUTION

1. Check the power switch. (See Symptom C above.) To reset, set the power switch in the off position, wait five minutes, and switch it back on.
2. Verify that the power cord is plugged into a functional power outlet. If the power supply has been connected, power off, wait five minutes, and switch it back on.
3. Pull the safety clip/safety switch, and plug it back in again.

If you are unable to clear any symptoms or are in need of additional assistance, please contact our Customer Service Team.

PARTS LIST

No	Part Name	Specifications	Part Number	Qty
1	Main Frame Assembly		2070101060024	1
2	Display Device Holder		2070101030561	1
3	Frame Assembly		2070101030563	1
4	Upright Columns		2070192030033	2
5	Square Tube Plug	50 X 50 X 3	1031030000533	4
6	Handrail		2070192030032	2
7	Base Assembly		2070101030560	1
8	Strengthening Tube		2070192030027	1
9	Hex Bolts	1/2-13 X 95 X 25mm	1032010100202	2
10	Locknut	1/2-13 (Thin)	1032040400079	2
11	Hexagon Socket Head Bolts	M10 X 58mm	1032010200179	3
12	Hexagon Socket Head Bolts	M10 X 40 X 20mm	1032010200231	1
13	Phillips Pan Head Tapping Screws	St4.2 X 12mm	1032050600023	35
14	Phillips Pan Head Tapping Screws	10611; M4.0-0.7 X 10mm	1032030600034	16
15	Phillips Pan Head Flange Face Tapping Screw Type F Type	St2.6 X 8.0mm	1032050600126	12
16	Hexagon Socket Head Bolts	M8 X 25mm	1032010200072	8
17	Locknut	M8 X (7.6-8.0mm)	1032040400018	4
18	Phillips Pan Head Tapping Screws	M3.0-0.5 X 25mm	1032030600090	1
19	Phillips Countersunk Head Screws	M3 X 10mm	1032030300055	2
20	Locknut	M3-0.5	1032040400090	16
21	Hexagon Countersunk Head Screws	M10 X 35mm	1032010300014	2
22	Hexagon Socket Head Bolts	M6 X 12mm; Electrophoresis	1032010200159	8
23	Phillips Pan Head Tapping Screws	St4.2 X 16mm	1032050600024	12
24	Hexagon Socket Head Bolts	M6 X 10mm	1032030200002	8
25	Hexagon Socket Head Bolts	M6 X 16mm	1032010200022	4
26	Hexagon Socket Head Bolts	M10 X 20mm	1032010200116	18
27	Hexagon Socket Head Bolts	M3 X 10mm	1032010600024	12
28	Hexagon Socket Head Bolts	M8 X 45mm	1032010200340	4
29	Hexagon Socket Head Bolts	M6 X 20mm	1032010200005	4
30	Flat Washers	Φ13 XΦ 32 X 1.5mm	1032070100150	4
31	Flat Washers	Φ10.4 XΦ20 X 1.0	1032070100053	24
32	Curved Washers	Φ8.5 XΦ19.0 Xδ1.5 X R25.4	1032079900068	2
33	Running Board	1420 X 680 X 19.05; Rohs	1039990000837	1
34	Front Roller Assembly	2.5”	1034020000087	1
35	Rear Roller Assembly	2.5”	1034020000088	1
36	Casing	Φ21.8 XΦ13.1 X 36.8	1032090100132	4
37	Sleeves	Φ33.3	1031060000035	8
38	Roller	Φ76.2 X 30.5	1031990000225B	4
39	V-Belt	8Pj525	1034070000052	1
40	Pulse Sensor Sheet Left 1	δ0.3	1035050000185	1
41	Pulse Sensor Sheet Left 2	δ0.3	1035050000186	1
42	Pulse Sensor Sheet Right 1	δ0.3	1035050000187	1
43	Pulse Sensor Sheet Right 2	δ0.3	1035050000188	1
44	Eva Pad	Φ48 X 0.8mm	1031990001022	4
45	Cushion		1031990000944	4
46	Instrument Nameplate Logo		1039990000820	1
47	Treadmill Nameplate Logo		1039990000821	1
48	Switch Rope		1035020000785	1
49	Rubber Mat	77 X 45 X 43	1031990000971	2
50	Safety Switch		1031010000564	1
51	Fan Middle Cover	126.5 X 34.5 X 17.1	1031010000566	1
52	Fan Left Cover	124.3 X 32 X 20.5	1031010000567	1
53	Fan Right Cover	123.6 X 32.20.5	1031010000568	1

No	Part Name	Specifications	Part Number	Qty
54	Pulse Plate	318.6 X 56.2 X 31.3	1031010000570	1
55	Left Grip	248.2 X 58.7 X 56.2	1031010000571	1
56	Right Grip	248.2 X 58.7 X 56.2	1031010000572	1
57	Rear Foot L	130.9 X 145.2 X 145.1	1031010000573	2
58	Safety Clip	61.8 X 25.1 X 29	1031010000586	1
59	Console Top Cover	711.1 X 143.3 X 221.7	2070193050120	1
60	Console Bottom Cover	695.5 X 73.5 X 184.4	2070193050122	1
61	Console Middle Cover	799.6 X 193.3 X 115.1	2070193030118	1
62	Pulse Handle Cover	782 X 248.4 X 116.9	2070193030127	1
63	Motor Cover	786.4 X 400.7 X 170.2	2070193050123	1
64	Motor Front Cover	787.4 X 127.3 X 83.8	2070193030119	1
65	Left Panel	1531.5 X 140.5 X 46.3	2070193030120	1
66	Right Panel	1531.5 X 140.5 X 46.3	2070193030121	1
67	Fan Support Frame 1	δ2	2070191030163	1
68	Fan Support Frame 2	δ2	2070191030164	1
69	Fan Support Frame 3	δ2	2070191030167	1
70	Support Base	δ3	2070191030166	1
71	Large Gasket	Φ32	1036010001768	2
72	Display Device	428 X 379 X 61	1035030000244	1
72A	Touch Panel	Electronic Watch Parts		1
72B	Pressure Plate	Electronic Watch Parts		1
72C	Ipad Shelf	Electronic Watch Parts		1
72D	Safety Switch Seat	Electronic Watch Parts		1
72E	Speaker	Electronic Watch Parts		2
72F	Electronic Cable Under Cover	Electronic Watch Parts		1
73	Control Panel		1035030000240	1
74	Fan		1035990000311	3
75	Frequency Converter		1035030000235	1
76	Motor		1035010000192	1
77	Lift Motor		1035010000191	1
78	Filter		1035030000236	1
79	Inductance		1035050000190	1
80	Air Switch		1035060000074	1
81	Power Outlet		1035990000285	1
82	Power Cable		1035020000782	1
83	Running Belt	508 X 3225 X Δ2.3mm	1034990000165B	1
84	Hexagon Countersunk Head Screws	M10 X 25mm	1032030300042	4
85	Locknut	M10 X (9.7-10.1mm)	1032040400011	12
86	Pulse Handle Under The Bar	771.8 X 72 X 113.4	2070199030037	1
87	Back Cover L	157.8 X 106.2 X 127.9	2070199030038	1
88	Back Cover R	157.8 X 106.2 X 127.9	2070199030039	1
89	Rear Seat L		2070199030040	1
90	Rear Seat R		2070199030041	1
91	Spring Washer	Φ8	108990103028	4
92	Spring Washer	Φ6	108990103027	2
93	Clamps	17.3 X 11 X 3.7 T=0.6	1032990000062	4
94	Flat Washer	Φ10.4 xΦ32 x 1.8mm	1032070100037	4
95	Phillips Pan Head Flanged Tapping Screws F Type #8	32 x 12.7mm	1032050600073	5
96	Hexagon Socket Pan Head Bolts	M10 x 60 x 15mm	1032010200096	1
97	Eva Pad	70 x 45 x 3.0mm	1031990001021	4
98	Hexagon Socket Head Bolts	M6 x 15mm		2

TOOLS: TOOL-1 Wrench, TOOL-2 Wrench, TOOL-3 Wrench, and Tool-4 Wrench

EXPLODED DIAGRAMS

DIAGRAM A

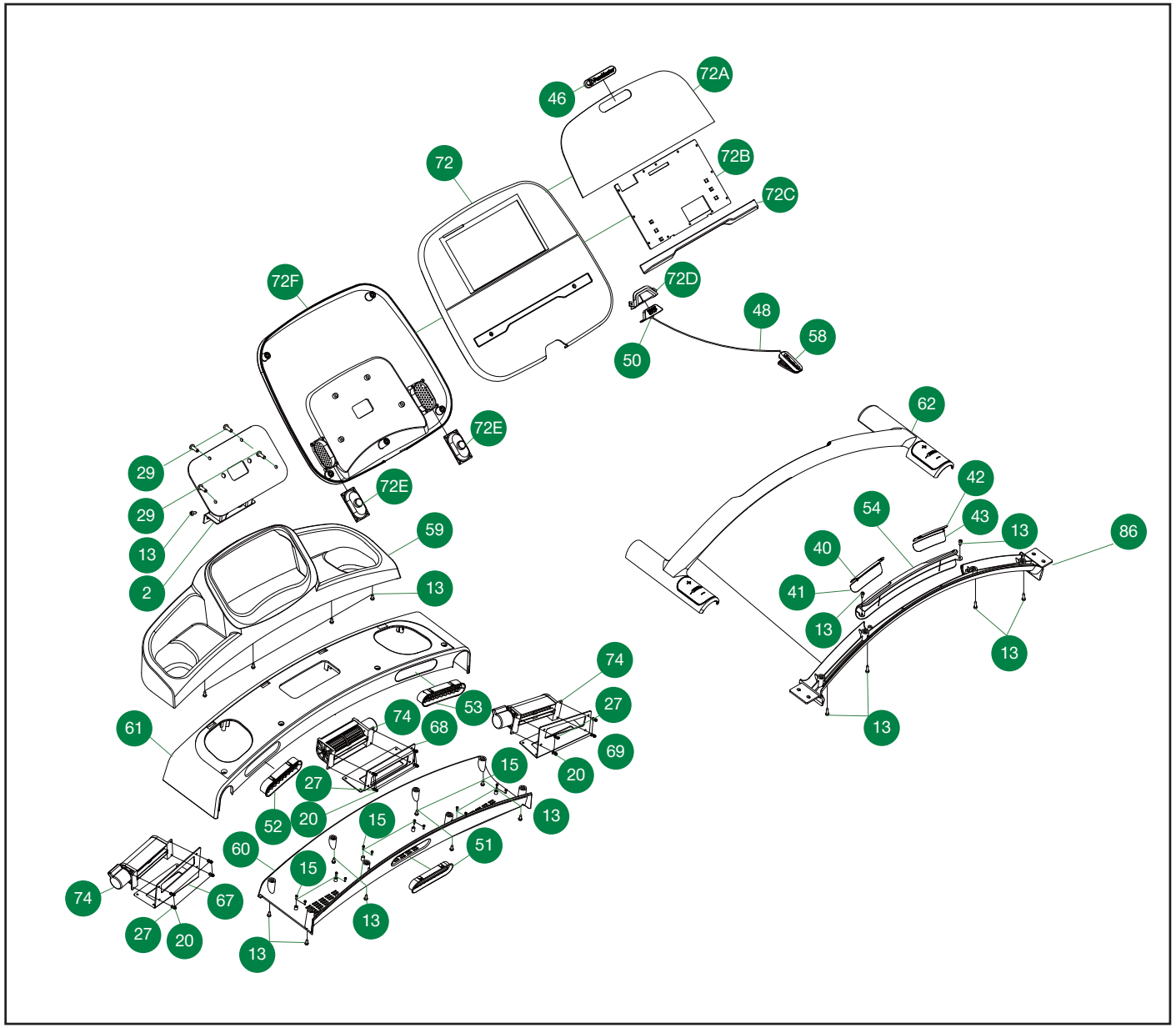

DIAGRAM B

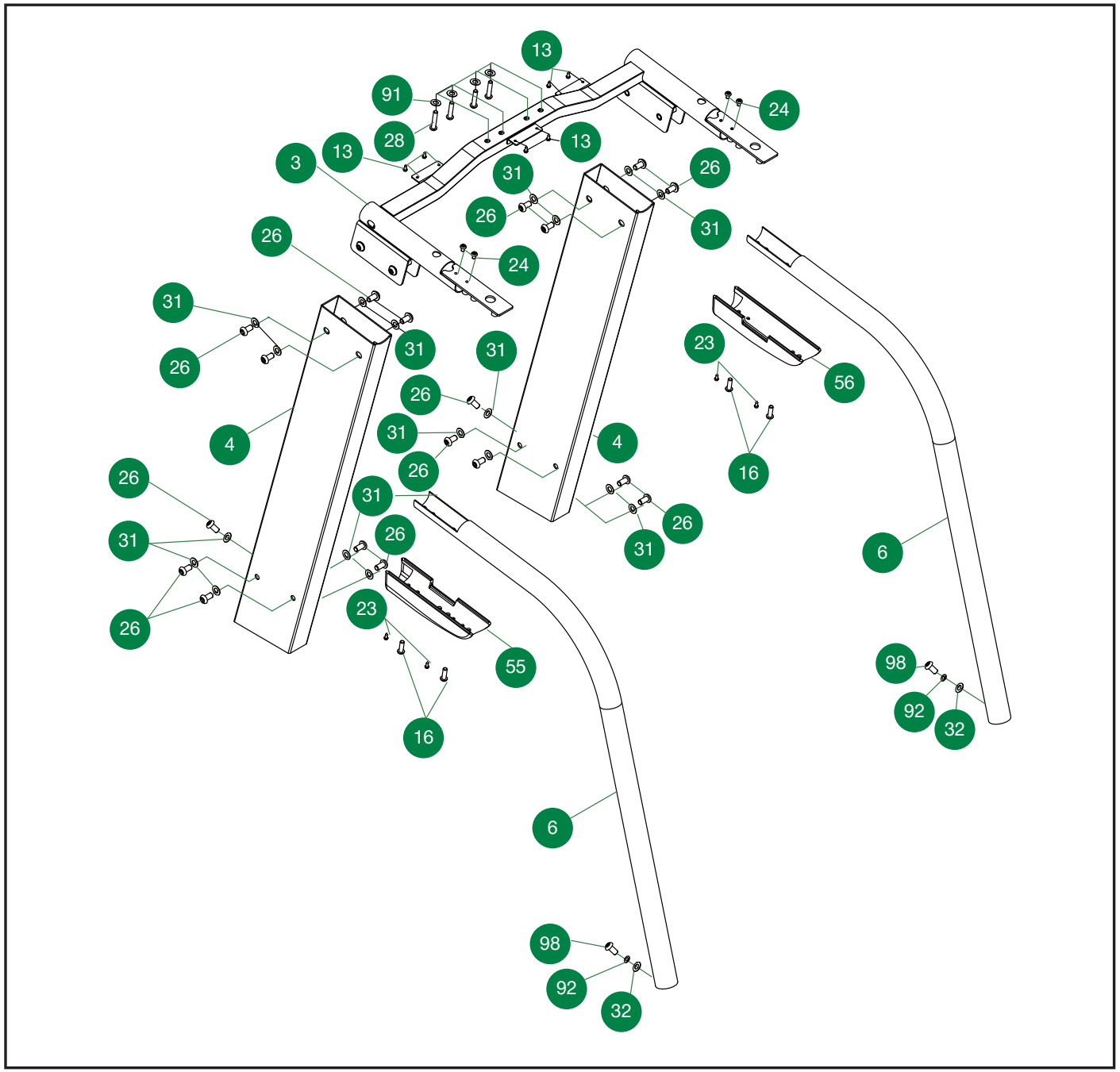
13
91
24
28
13
3
13
31
26
26
31
26
24
31
31
31
23
26
56
26
4
31
4
26
16
26
31
26
31
26
31
6
23
26
55
98
92
32
16
6
98
92
32

DIAGRAM C

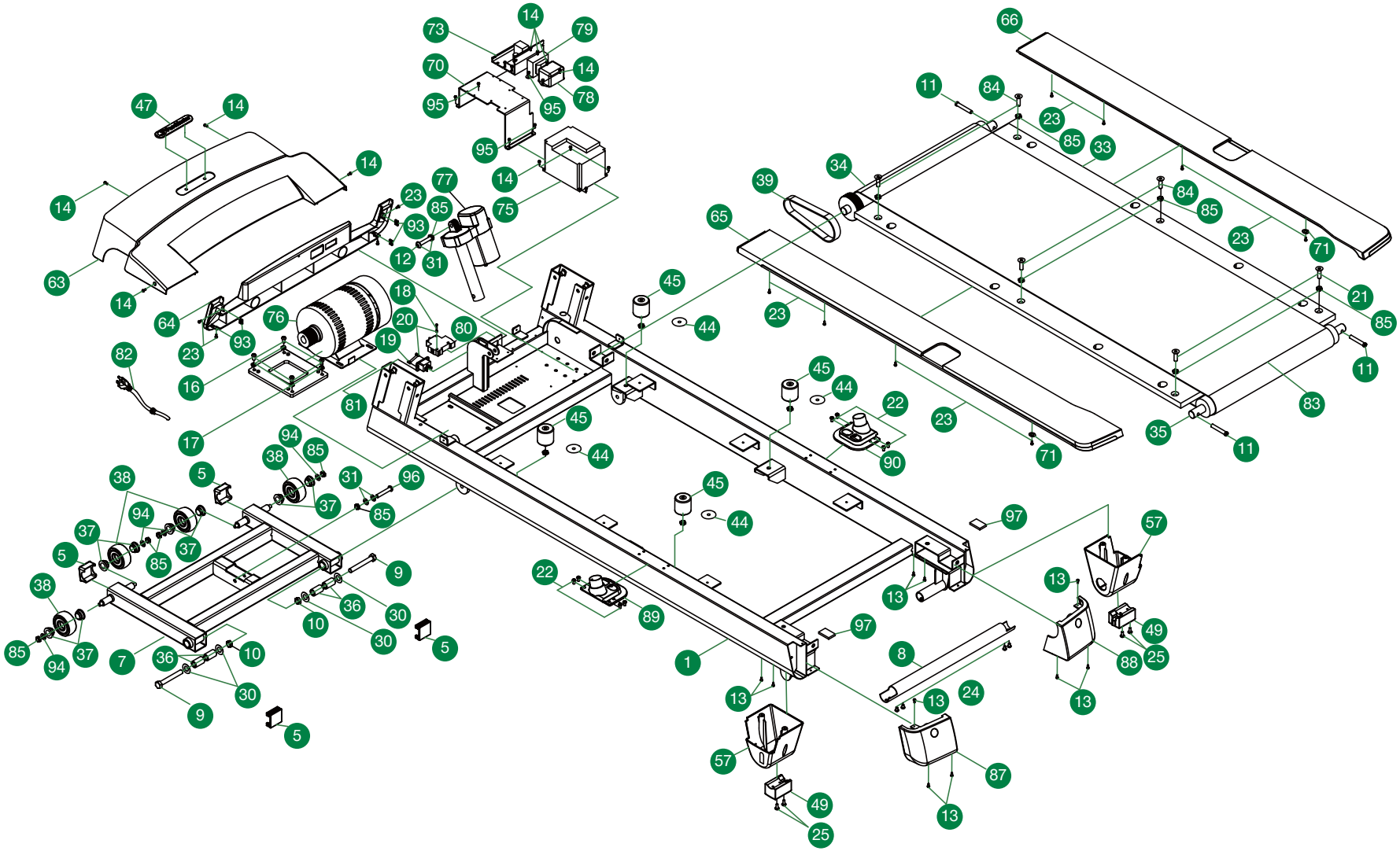
14
73
79
70
14
78
95
95
95
14
75
47
14
14
14
63
14
77
23
85
93
12
31
64
76
23
93
18
20
19
80
82
16
17
81
45
44
45
44
45
44
45
44
22
90
23
71
66
11
84
23
85
33
34
39
65
84
85
23
71
21
85
11
83
35
11
94
85
38
5
31
96
37
85
38
94
37
37
5
85
9
38
36
30
10
30
5
85
94
37
7
36
10
30
9
5
22
89
97
1
13
57
49
25
97
8
13
24
13
87
13
13
57
13
49
88
25
13

WARRANTY INFORMATION

Register your product today. PaceMaster backs your treadmill with the warranty provided below. For PaceMaster to respond to any problems you may have, we need your warranty information on file. PaceMaster will send you a complimentary gift upon receiving your product warranty registration.

OUR WARRANTY

This PaceMaster exercise equipment ("Product") is warranted to be free of defects in material and workmanship under normal use and service conditions. The frame, drive motor, and walking platform are warranted for the lifetime of the Product.

For Residential use (in-home only), Non-wearable Parts and electronics are warranted for five (5) years from the date of purchase. Wearable parts (drive belt, walking belt, grips, overlays, plastic parts) and Labor is warranted for one (1) year from the date of purchase.

For Semi-commercial [paying facilities or up to five (5) hours of use per day], Non-wearable Parts and electronics are warranted for one (1) year from the date of purchase. Wearable parts (drive belt, walking belt, grips, overlays, plastic parts) are warranted for six (6) months and Labor is warranted for one (1) year from the date of purchase.

PaceMaster does not offer a Commercial use [paying facilities and/or five (5) or more hours of use per day] warranty for this product.

WHO IS COVERED

PaceMaster will repair or replace the Product for the original purchaser or the original recipient if the product is a gift.

HOW LONG IS IT COVERED

All coverage is provided by specific Product according to the matrix listed on the following page:
www.pacemaster.com/warranty-matrix

WHO PAYS TRANSPORTATION, INSURANCE, AND IN-HOME SERVICE

If the Product requires return to a service facility for repairs, PaceMaster will pay all transportation and insurance charges for the first year. After the first year, you are responsible for transportation and insurance charges. For in-home service, you may be responsible for a minimal trip charge.

WHAT WE WILL DO TO CORRECT COVERED DEFECTS

We will repair or replace the Product, at PaceMaster's option. In most cases, replacement parts will be provided to the owner. In the event more extensive repairs are required, the Product will be shipped to a designated repair facility. Replacement parts are warranted for the remaining portion of the original warranty period.

WHAT IS NOT COVERED

Any failures or damage caused by unauthorized service, misuse, accident, negligence, improper assembly or installation, debris resulting from any construction activities in the Product's environment, rust or corrosion as a result of the Product's location, alterations, or modifications without our written authorization or by failure on your part to use, operate, and maintain the Product as set out in your User Manual.

All terms of this warranty are void if this product is moved beyond the continental borders of the United States of America (excluding Alaska, Hawaii, and Canada) and are then subject to the terms provided by that country's local authorized PaceMaster representative.

WHAT YOU MUST DO

Retain proof of purchase. Always use, operate, and maintain the Product as specified in the User Manual. Notify PaceMaster Customer Service of any defect within 10 days after discovery of the defect. If requested, return any defective part for replacement or the entire Product for repair. Your treadmill requires periodic maintenance specified in the User Manual, including annual application of lubricant to the belt, or the warranty is voided. Use of the treadmill must comply with directions in the User Manual or the warranty is voided.

For warranty service, please contact PaceMaster's Customer Service Team. Be prepared to offer the model number and serial number of the product.

EXCLUSIVE WARRANTY

THIS LIMITED WARRANTY IS IN LIEU OF ALL OTHER WARRANTIES, implied or expressed. PaceMaster specifically disclaims any other implied warranties of merchantability and fitness for a particular purpose. PaceMaster is not responsible or liable for indirect, special, or consequential damages arising out of or in connection with the use or performance of this Product. Some states do not allow the exclusion or limitation of implied warranties or of liability for incidental or consequential damages, so the above limitations or exclusions may not apply to you. This warranty provides you certain rights. You may have other rights, which vary from state to state.

PACEMASTER GUARANTEE

Our Products are designed and manufactured to the highest standards. We want you completely satisfied with our Products and will do everything possible under the terms of this warranty to keep you secure in knowing you have bought the best.

For questions regarding the use and maintenance of your product, please contact our PaceMaster Customer Service Team:

PaceMaster.com/help
Phone: (888) 699-8918
Email: support@pacemaster.com
Mail: PO Box 373, Logan, UT 84323

ORDERING REPLACEMENT PARTS

If replacement parts are necessary, use only genuine replacement parts and hardware supplied by PaceMaster or a PaceMaster certified service provider. Failure to use genuine replacement parts can cause a risk to users, keep the machine from operating correctly, and void the warranty. Visit our website for a list of our Certified Service Providers or contact our Customer Service Team for assistance.

PaceMaster®

Customer Service Team:
888-699-8918
www.pacemaster.com/help
support@pacemaster.com