EMC TEST REPORT

Applicant	NextVPU (Shanghai) Co., Ltd.
FCC ID	2AOQI-ACW1
Product	Smart Camera
Brand	AngelEye
Model	AC-W1
Report No.	EFTA25100243-IE-12-E1
Issue Date	February 4, 2026

Eurofins TA Technology (Shanghai) Co., Ltd. tested the above equipment in accordance with the requirements in **FCC Code CFR47 Part15B (2025)/ ANSI C63.4-2014**. The test results show that the equipment tested is capable of demonstrating compliance with the requirements as documented in this report.

Prepared by: Liu Wei *Approved by: Xu Kai*

Eurofins TA Technology (Shanghai) Co., Ltd.

Building 3, No.145, Jintang Rd, Pudong Shanghai, P.R.China

TEL: +86-021-50791141/2/3

FAX: +86-021-50791141/2/3-8000

Table of Contents

1 Test Laboratory 4
1.1 Notes of the Test Report 4
1.2 Test Facility 4
1.3 Testing Location 4
2 General Description of Equipment Under Test 5
2.1 Applicant and Manufacturer Information 5
2.2 General Information 5
2.3 Applied Standards 6
2.4 Test Mode 7
3 Test Case Results 8
3.1 Radiated Emission 8
3.2 Conducted Emission 13
4 Uncertainty Measurement 16
5 Main Test Instruments 17
6 The EUT Appearance 18
7 Test Setup Photos 19

This report shall not be reproduced except in full, without the written approval of Eurofins TA Technology (Shanghai) Co., Ltd.

Summary of measurement results

Number	Test Case	Clause in FCC Rules	Conclusion
1	Radiated Emission	FCC Part15.109, ANSI C63.4-2014	PASS
2	Conducted Emission	FCC Part15.107, ANSI C63.4-2014	PASS
Date of Testing: November 6, 2025 ~ November 13, 2025 Date of Sample Received: November 3, 2025			
Note: 1. The conformity assessment in this report is based on a direct comparison of the test results with the limits by Eurofins TA Technology (Shanghai) Co., Ltd., without considering measurement uncertainty.			

This report shall not be reproduced except in full, without the written approval of Eurofins TA Technology (Shanghai) Co., Ltd.

1 Test Laboratory

1.1 Notes of the Test Report

This report shall not be reproduced in full or partial, without the written approval of **Eurofins TA Technology (Shanghai) Co., Ltd.** The results documented in this report apply only to the tested sample, under the conditions and modes of operation as described herein. Measurement Uncertainties were not taken into account and are published for informational purposes only. This report is written to support regulatory compliance of the applicable standards stated above.

1.2 Test Facility

FCC (Designation number: CN1179, Test Firm Registration Number: 446626)

Eurofins TA Technology (Shanghai) Co., Ltd. has been listed on the US Federal Communications Commission list of test facilities recognized to perform measurements.

A2LA (Certificate Number: 3857.01)

Eurofins TA Technology (Shanghai) Co., Ltd. has been listed by American Association for Laboratory Accreditation to perform measurement.

1.3 Testing Location

Company:	Eurofins TA Technology (Shanghai) Co., Ltd.
Address:	Building 3, No.145, Jintang Rd, Pudong Shanghai, P.R.China
City:	Shanghai
Post code:	201201
Country:	P. R. China
Contact:	Xu Kai
Telephone:	+86-021-50791141/2/3
Fax:	+86-021-50791141/2/3-8000
Website:	https://www.eurofins.com/electrical-and-electronics
E-mail:	Kain.Xu@cpt.eurofinscn.com

This report shall not be reproduced except in full, without the written approval of Eurofins TA Technology (Shanghai) Co., Ltd.

2 General Description of Equipment Under Test

2.1 Applicant and Manufacturer Information

Applicant	NextVPU (Shanghai) Co., Ltd.
Applicant address	Room 501, Building 7, No. 3000 Longdong Avenue,Shanghai Pilot Free Trade Zone,Shanghai,China
Manufacturer	NextVPU (Shanghai) Co., Ltd.
Manufacturer address	Room 501, Building 7, No. 3000 Longdong Avenue,Shanghai Pilot Free Trade Zone,Shanghai,China

2.2 General Information

EUT Description			
Device Type	Portable Device		
Model	AC-W1		
SN	SRW224C120515		
HW Version	ACW1-v1.3		
SW Version	v00.17.02		
Power Rating	DC 5V		
Connecting I/O Port(s)	Please refer to the User's Manual.		
Antenna Type	Internal Antenna		
Frequency	Band	Tx (MHz)	Rx (MHz)
	Bluetooth	2400 ~ 2483.5	2400 ~ 2483.5
	Wi-Fi 2.4GHz	2400 ~ 2483.5	2400 ~ 2483.5
	Wi-Fi 5GHz (U-NII-1)	5150 ~ 5250	5150 ~ 5250
	Wi-Fi 5GHz (U-NII-3)	5725 ~ 5850	5725 ~ 5850
EUT Accessory			
Adapter	Manufacturer: SHENZHEN HUAJIN ELECTRON CO.LTD. Model: HJ-0502000W2-US Input: 100-240V~50/60Hz 0.3A Output: 5.0V ⎓ 2.0A		
Battery	Manufacturer: Chongqing VDL Electronics Co., LTD. Model: 471648PN5 DC 3.87V, 460mAh		
USB Cable	Manufacturer: Shenzhen Pueno Technology Co., Ltd. Model: SJ-215 100cm Cable, Shielded		
Note: The EUT is sent from the applicant to Eurofins TA and the information of the EUT is declared by the applicant.			

This report shall not be reproduced except in full, without the written approval of Eurofins TA Technology (Shanghai) Co., Ltd.

2.3 Applied Standards

According to the specifications of the manufacturer, it must comply with the requirements of the following standards:

Test standards
FCC Code CFR47 Part15B (2025)
ANSI C63.4-2014

This report shall not be reproduced except in full, without the written approval of Eurofins TA Technology (Shanghai) Co., Ltd.

2.4 Test Mode

Test Mode	
Mode 1	Adapter + cable + EUT + Bluetooth/Wi-Fi receiver + video record

Test Type	Test Mode	Worst Mode
Radiated Emission	Mode 1	Mode 1
Conducted Emission	Mode 1	Mode 1
After technical evaluation or/and preliminary test, the test data of the worst-case condition was recorded in this report.		

This report shall not be reproduced except in full, without the written approval of Eurofins TA Technology (Shanghai) Co., Ltd.

3 Test Case Results

3.1 Radiated Emission

Ambient Condition

Temperature	Relative humidity
15°C ~ 35°C	30% ~ 60%

Methods of Measurement

The EUT is placed on a non-metallic table 0.8m above the horizontal metal reference ground plane. The distance between EUT and receive antenna should be 10 meters below 1GHz; 3 meters for above 1GHz. During the test, the EUT was operating in its typical mode. The test method is according to ANSI C63.4-2014. Sweep the whole frequency band through the range from 30MHz to the 5th harmonic of the carrier. During the test, the height of receive antenna shall be moved from 1 to 4 meters, and the antenna shall be performed under horizontal and vertical polarization. The turn table shall be rotated from 0 to 360 degrees for detecting the maximum of radiated signal level.
The data of cable loss and antenna factor has been calibrated in full testing frequency range before the testing. During the test, the EUT is worked at maximum output power.
Set the spectrum analyzer in the following:

Below 1GHz:
RBW=100 kHz / VBW=300 kHz / Sweep=AUTO
Above 1GHz:
(a) PEAK Detector: RBW=1MHz / VBW=3MHz/ Sweep=AUTO
(b) AVERAGE Detector: RBW=1MHz / VBW=3MHz / Sweep=AUTO

The radiated emission was measured in the following position: EUT stand-up position (Z axis), lie-down position (X, Y axis). The worst emission was found in lie-down position (X axis) and the worst case was recorded.

This report shall not be reproduced except in full, without the written approval of Eurofins TA Technology (Shanghai) Co., Ltd.

Test Setup

Below 1GHz

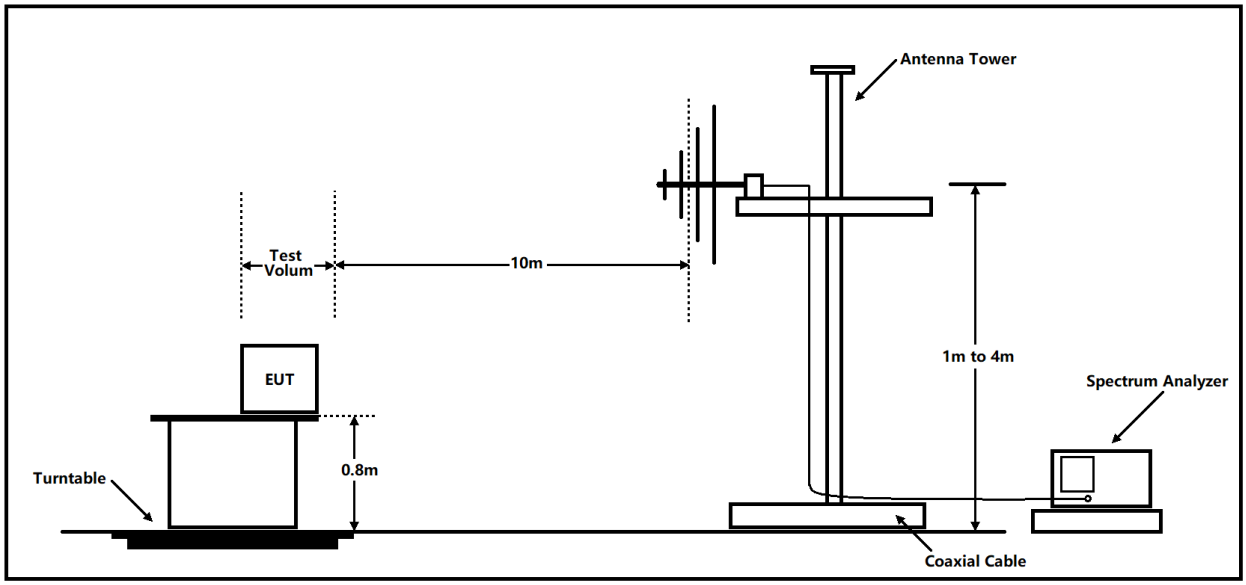

Note: Area side: 21m x 12m

Above 1GHz

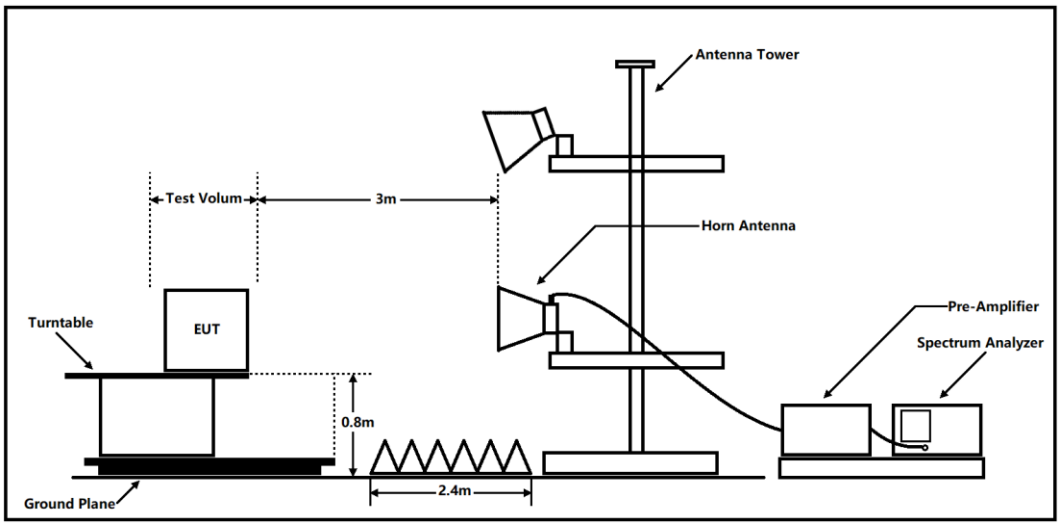

Note: Area side: 2.4mX3.6m

Antenna Tower meets ANSI C63.4 requirements for measurements above 1 GHz by keeping the antenna aimed at the EUT during the antenna's ascent/ descent along the antenna mast.

This report shall not be reproduced except in full, without the written approval of Eurofins TA Technology (Shanghai) Co., Ltd.

Limits

Class B

Frequency (MHz)	Field Strength (dBμV/m)	Detector
30 -88	30.0	Quasi-peak
88-216	33.5	Quasi-peak
216 – 960	36.0	Quasi-peak
960-1000	44.0	Quasi-peak
1000-5th harmonic of the highest frequency or 40GHz, which is lower	54 74	Average Peak

Frequency range of radiated measurements

Highest frequency generated or used in the device or on which the device operates or tunes (MHz)	Upper frequency of measurement range (MHz)
Below 1.705	30
1.705-108	1000
108-500	2000
500-1000	5000
Above 1000	5th harmonic of the highest frequency or 40 GHz, whichever is lower.

This report shall not be reproduced except in full, without the written approval of Eurofins TA Technology (Shanghai) Co., Ltd.

Test Results

Sweep the whole frequency band through the range from 30MHz to the 5th harmonic of the carrier. The Emissions in the frequency band 18GHz – 40GHz is more than 20dB below the limit are not reported.

The following graphs display the maximum values of horizontal and vertical by software.

Spectrum Overview H/V

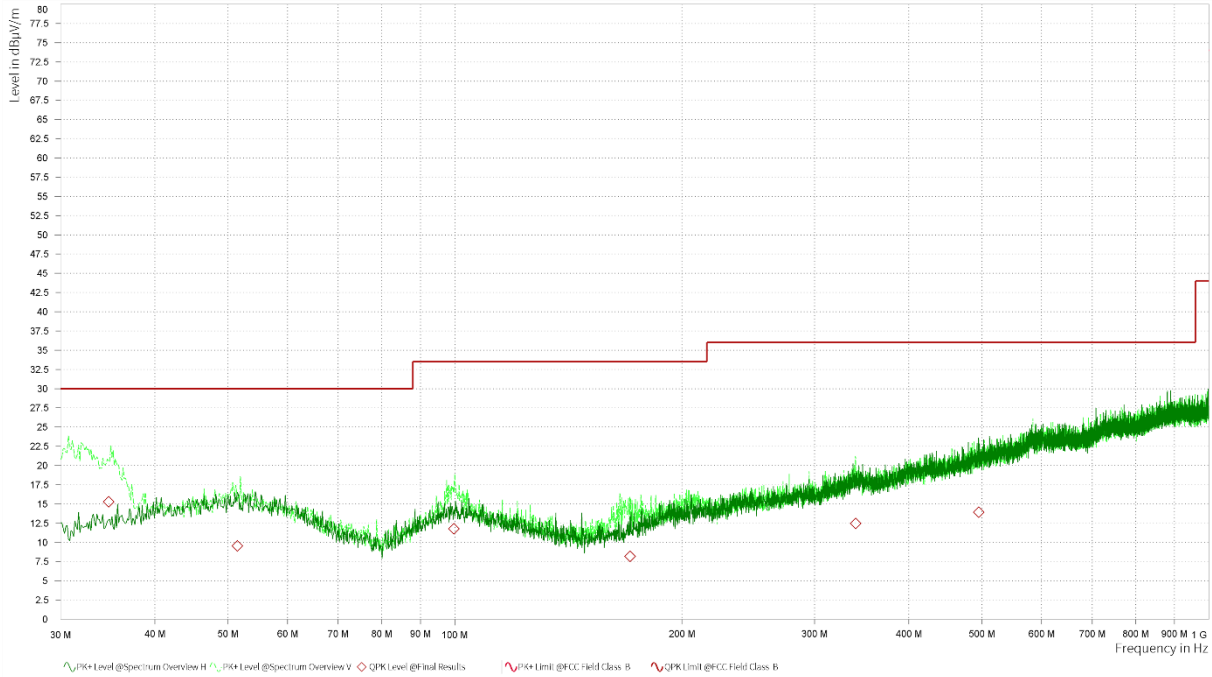

Radiated Emission from 30MHz to 1GHz

Frequency [MHz]	QPK Level [dBµV/m]	QPK Limit [dBµV/m]	QPK Margin [dB]	Correction [dB]	Polarization	Azimuth [deg]	Antenna Height [m]	Meas. BW [kHz]	Meas. Time [s]
34.743	15.27	30.00	14.73	-10.79	V	257.8	1.25	120.000	1.000
51.478	9.52	30.00	20.48	-8.17	V	327.5	1.11	120.000	1.000
99.673	11.76	33.50	21.74	-9.70	V	163.2	1.00	120.000	1.000
170.722	8.16	33.50	25.34	-12.09	V	97.2	2.08	120.000	1.000
340.035	12.46	36.00	23.54	-5.87	V	135.3	1.20	120.000	1.000
495.270	13.91	36.00	22.09	-3.25	H	327.2	1.82	120.000	1.000

Remark: 1. Correction Factor = Antenna factor + Insertion loss(cable loss+amplifier gain)

2. Margin = Limit – Quasi-Peak

This report shall not be reproduced except in full, without the written approval of Eurofins TA Technology (Shanghai) Co., Ltd.

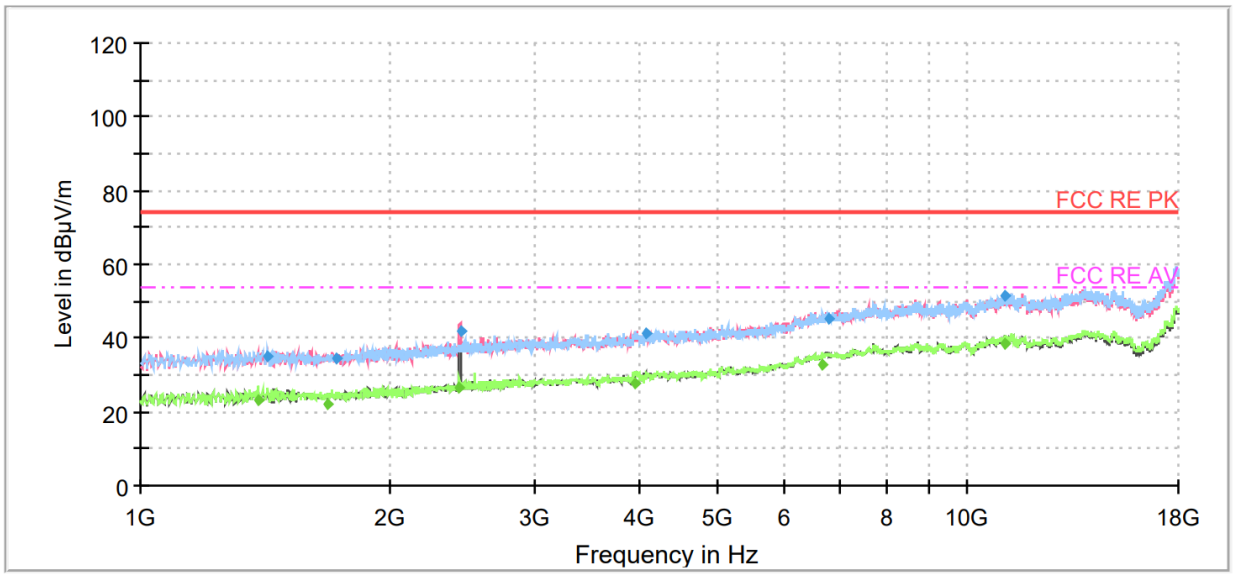

PK Level @Spectrum Overview H
PK Level @Spectrum Overview V
PK Level @Final Results
PK Limit
AVG Level @Spectrum Overview H
AVG Level @Spectrum Overview V
AVG Level @Final Results
AVG Limit

Radiated Emission from 1GHz to 18GHz

Final_Result

Frequency (MHz)	MaxPeak (dBµV/m)	Average (dBµV/m)	Limit (dBµV/m)	Margin (dB)	Meas. Time (ms)	Height (cm)	Pol	Azimuth (deg)	Corr. (dB/m)
1391.00	---	23.17	54.00	30.83	1000.00	114.0	H	230.00	-14
1427.13	35.07	---	74.00	38.93	1000.00	124.0	H	116.00	-14
1686.38	---	22.30	54.00	31.70	1000.00	104.0	V	341.00	-13
1726.75	34.74	---	74.00	39.26	1000.00	125.0	H	126.00	-13
2434.38	---	26.75	54.00	27.25	1000.00	196.0	V	128.00	-10
2436.50	42.04	---	74.00	31.96	1000.00	206.0	V	166.00	-10
3968.63	---	27.98	54.00	26.02	1000.00	110.0	H	78.00	-4
4096.13	41.40	---	74.00	32.60	1000.00	177.0	H	164.00	-5
6686.50	---	32.67	54.00	21.33	1000.00	114.0	H	245.00	1
6811.88	45.21	---	74.00	28.79	1000.00	100.0	V	116.00	1
11081.00	51.50	---	74.00	22.50	1000.00	190.0	H	0.00	7
11095.88	---	38.65	54.00	15.35	1000.00	222.0	H	305.00	7

Remark: 1. Correction Factor = Antenna factor + Insertion loss (cable loss + amplifier gain)
2. Margin = Limit – MaxPeak / Average

This report shall not be reproduced except in full, without the written approval of Eurofins TA Technology (Shanghai) Co., Ltd.

3.2 Conducted Emission

Ambient Condition

Temperature	Relative humidity
15°C ~ 35°C	30% ~ 60%

Methods of Measurement

The EUT is placed on a non-metallic table of 80cm height above the horizontal metal reference ground plane. During the test, the EUT was operating in its typical mode. The test method is according to ANSI C63.4-2014. Connect the AC power line of the EUT to the L.I.S.N. Use EMI receiver to detect the average and Quasi-peak value. RBW is set to 9 kHz, VBW is set to 30kHz. The measurement result should include both L line and N line.

Test Setup

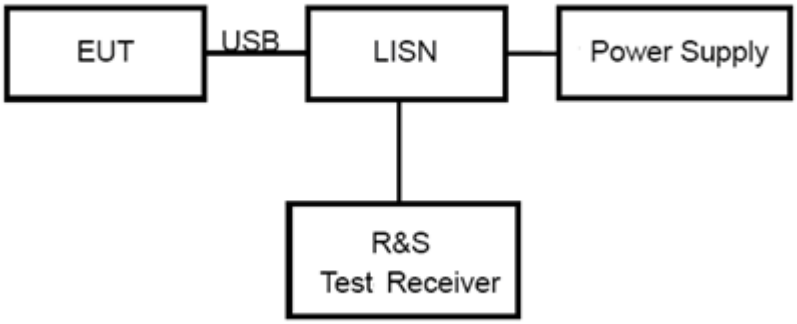

Note: Power Supply is AC Power source and it is used to change the voltage 120V/60Hz.

Limits

Frequency (MHz)	Class A (dBμV)		Class B (dBμV)	
	Quasi-peak	Average	Quasi-peak	Average
0.15 - 0.5	79	66	66 to 56 *	56 to 46*
0.5 - 5	73	60	56	46
5 - 30	73	60	60	50
*: Decreases with the logarithm of the frequency.				

Note: The EUT should meet CLASS B limit.

This report shall not be reproduced except in full, without the written approval of Eurofins TA Technology (Shanghai) Co., Ltd.

Test Results

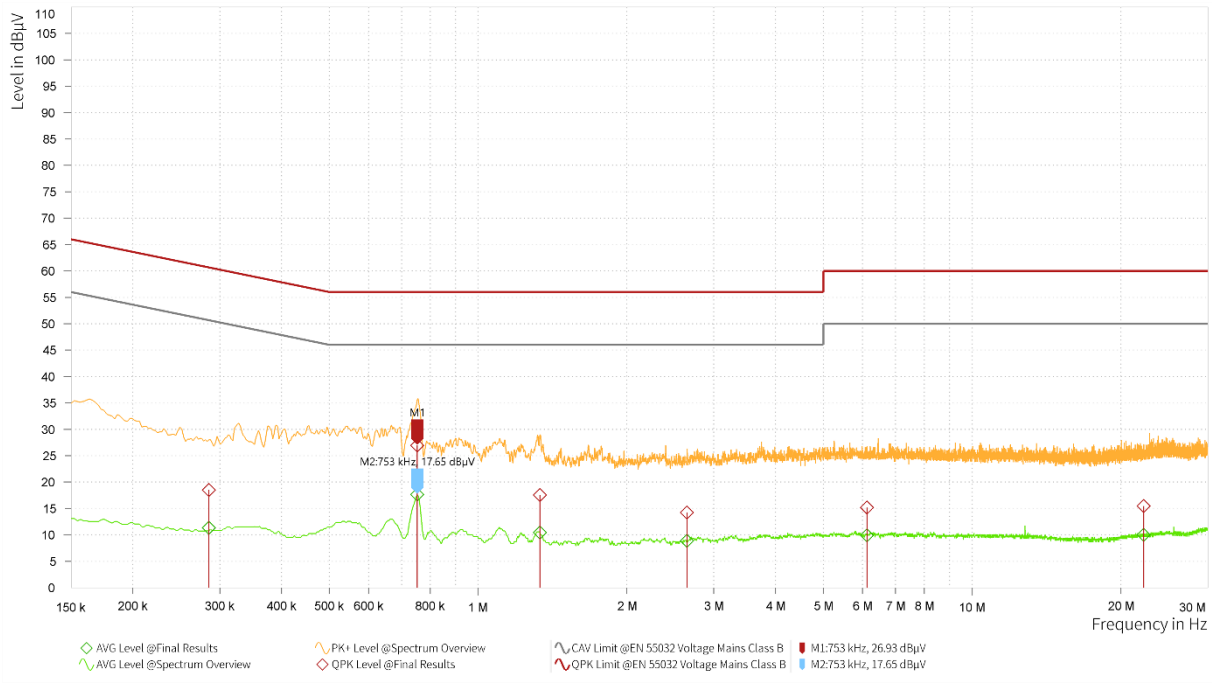

Frequency [MHz]	QPK Level [dBµV]	QPK Limit [dBµV]	QPK Margin [dB]	AVG Level [dBµV]	AVG: CAV Limit [dBµV]	AVG Margin [dB]	Correction [dB]	Line	Meas. BW [kHz]	Meas. Time [s]
0.285	18.48	60.67	42.19	11.36	50.67	39.31	20.95	L1	9.000	1.000
0.753	26.93	56.00	29.07	17.65	46.00	28.35	20.37	L1	9.000	1.000
1.334	17.57	56.00	38.43	10.42	46.00	35.58	19.93	L1	9.000	1.000
2.648	14.22	56.00	41.78	8.85	46.00	37.15	19.52	L1	9.000	1.000
6.124	15.18	60.00	44.82	9.93	50.00	40.07	19.40	L1	9.000	1.000
22.245	15.47	60.00	44.53	10.03	50.00	39.97	19.71	L1	9.000	1.000

Remark: Correct factor=cable loss + LISN factor

L line

Conducted Emission from 150 kHz to 30 MHz

This report shall not be reproduced except in full, without the written approval of Eurofins TA Technology (Shanghai) Co., Ltd.

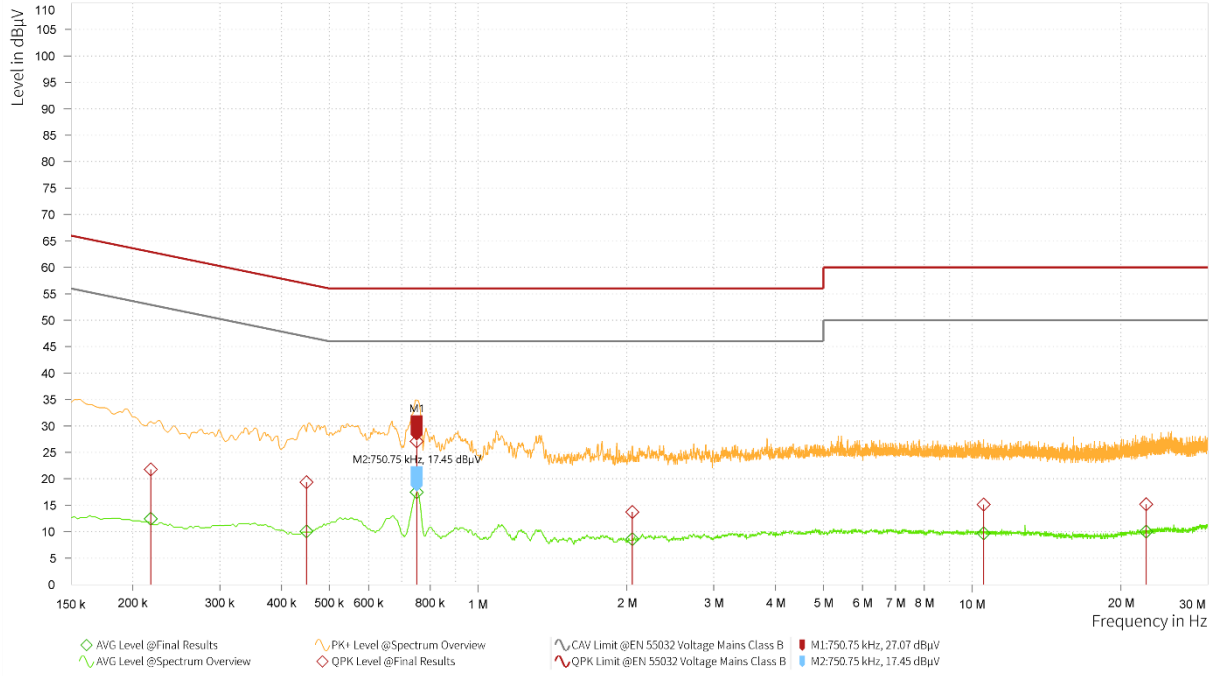

Frequency [MHz]	QPK Level [dBµV]	QPK Limit [dBµV]	QPK Margin [dB]	AVG Level [dBµV]	AVG: CAV Limit [dBµV]	AVG Margin [dB]	Correction [dB]	Line	Meas. BW [kHz]	Meas. Time [s]
0.218	21.77	62.91	41.15	12.41	52.91	40.50	21.01	N	9.000	1.000
0.449	19.35	56.89	37.54	10.03	46.89	36.85	20.84	N	9.000	1.000
0.751	27.07	56.00	28.93	17.45	46.00	28.55	20.38	N	9.000	1.000
2.051	13.71	56.00	42.29	8.60	46.00	37.40	19.65	N	9.000	1.000
10.556	15.15	60.00	44.85	9.69	50.00	40.31	19.44	N	9.000	1.000
22.508	15.18	60.00	44.82	9.99	50.00	40.01	19.77	N	9.000	1.000

Remark: Correct factor=cable loss + LISN factor

N line

Conducted Emission from 150 kHz to 30 MHz

This report shall not be reproduced except in full, without the written approval of Eurofins TA Technology (Shanghai) Co., Ltd.

4 Uncertainty Measurement

Case	Uncertainty	Factor k
Radiated Emission 30MHz – 200MHz	3.39 dB	1.96
Radiated Emission 200MHz – 1GHz	3.82 dB	1.96
Radiated Emission 1GHz – 18GHz	4.35 dB	1.96
Conducted Emission	2.57 dB	2

This report shall not be reproduced except in full, without the written approval of Eurofins TA Technology (Shanghai) Co., Ltd.

5 Main Test Instruments

Name of Equipment	Manufacturer	Type/Model	Serial Number/ Version	Calibration Date	Expiration Time
Radiated Emission					
Signal Analyzer	R&S	FSV40	101186	2025-05-06	2026-05-05
Loop Antenna	SCHWARZBECK	FMZB1519	1519-047	2023-04-16	2026-04-15
Horn Antenna	SCHWARZBECK	BBHA 9120D	430	2024-07-18	2027-07-17
Amplifier	R&S	SCU18F	101022	2025-05-06	2026-05-05
Software	R&S	EMC32	9.26.01	/	/
EMI Test Receiver	R&S	ESR	102720	2025-05-06	2026-05-05
TRILOG Broadband Antenna	SCHWARZBECK	VULB 9163	01614	2023-09-13	2026-09-12
Horn Antenna	R&S	BBHA 9170	01301	2023-09-16	2026-09-15
Software	R&S	ELEKTRA	5.02.1	/	/
Conducted Emission					
Artificial main network	R&S	ENV216	102191	2024-12-02	2026-12-01
EMI Test Receiver	R&S	ESR	101667	2025-05-06	2026-05-05
Software	R&S	EMC32	10.35.10	/	/

This report shall not be reproduced except in full, without the written approval of Eurofins TA Technology (Shanghai) Co., Ltd.

6 The EUT Appearance

Refer to *EUT Appearance*.

This report shall not be reproduced except in full, without the written approval of Eurofins TA Technology (Shanghai) Co., Ltd.

7 Test Setup Photos

Refer to *EMC Test Setup*.

******** END OF REPORT ********

This report shall not be reproduced except in full, without the written approval of Eurofins TA Technology (Shanghai) Co., Ltd.