PACKAGE CONTENTS
- Wireless Charger/Power Bank
- USB Type-C Dual Charging Cable

SAFETY INSTRUCTIONS
- Do not use the product near fire or liquids.
- Keep this product away from heat sources, including direct sunlight,
- high temperature and high humidity environments.
- Do not use this product if it has been exposed to liquids or moisture.
- Do not use if your hands are wet to prevent electric shock or injury to yourself.
- Only use this device for its intended use.

TECHNICAL SPECIFICATIONS
Power Capacity: 10000mAh @3.7V 37WH
Power Input: 5V⎓3A 9V⎓3A 12V⎓3A 15V⎓3A 20V⎓2.25A
Power Output: 5V⎓3A 9V⎓3A 12V⎓3A 15V⎓3A 20V⎓2.25A
Wireless Output: 10W
Max Output: 5V⎓4A

Power Bank will stop operating when the temperature exceeds 60°C/140°F degrees.
Working Temperature: -20°C/-4°F degrees ~ 60°C/140°F degrees.
Charging Protection (Input): Over-Voltage, Over-Charging, Over Current.
Charging Protection (Output): Over-Current, Over-Voltage, Over-Discharge, Short Circuit.

The Samsara Luggage PB2 Power Bank complies and is certified with rules and regulations:

This device complies with part 15 of the FCC Rules. Operation is subject to the following two conditions: (1) this device may not cause harmful interference, and (2) this device must accept any interference received, including interference that may cause undesired operation. Any changes or modifications not expressly approved by the party responsible for compliance could void the user's authority to operate the equipment.
NOTE: This equipment has been tested and found to comply with the limits for a Class B digital device, pursuant to Part 15 of the FCC Rules. These limits are designed to provide reasonable protection against harmful interference in a residential installation. This equipment generates, uses and can radiate radio frequency energy and, if not installed and used in accordance with the instructions, may cause harmful interference to radio communications. However, there is no guarantee that interference will not occur in a particular installation. If this equipment does cause harmful interference to radio or television reception, which can be determined by turning the equipment off and on, the user is encouraged to try to correct the interference by one or more of the following measures:
- Reorient or relocate the receiving antenna.
- Increase the separation between the equipment and receiver.
- Connect the equipment into an outlet on a circuit different from that to which the receiver is connected.
- Consult the dealer or an experienced radio/TV technician for help.
- To maintain compliance with FCC's RF Exposure guidelines, This equipment should be installed and operated with minimum 20cm distance between the radiator and your body: Use only the supplied antenna.

Note: The product is not recommended for use outside the Samsara Luggage Bag

Designed by Samsara | Assembled in China
info@samsaraluggage.com | samsaraluggage.com

SAMSARA LUGGAGE POWER BANK

USER GUIDE

INTRODUCTION

The Un-Carrier On wireless charging device is designed to charge all your electronic devices while you're traveling and on-the-go. The device fits seamlessly in the back of your new Un-Carrier On suitcase.

Key Features:

- Wireless charger for compatible devices.
- USB-C port offers an additional charging option for cell phones, tablets, laptops, and other electronic devices.
- Power Delivery (PD) fast charging.

FEATURES AT-A-GLANCE

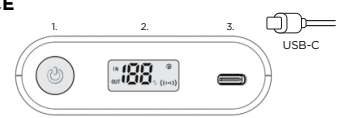

1. Power (On/Off) Button:

- Power "on" device to start wireless charging for cell phones or devices that support wireless charging.
- The wireless charging capability is only functional for devices that support the charging feature.
- The Power Bank will turn off after 30 seconds of inactivity.

2. LED Display:

- **"IN" Icon:** The "IN" icon will light up when the Power Bank device is being charged.
- **"OUT" Icon:** The "OUT" icon will light up when the Power Bank is charging an electronic device wirelessly or via the USB-C port.
- **Power Bank Battery Percentage:** This icon shows the remaining power of the Power Bank.
- **POWER DELIVERY (PD) | Fast Charging Technology:** This icon will blink when PD or fast charging is enabled. This charging feature is only available for USB-C charging.
- **Wireless Icon:** This icon will blink when device is charging wirelessly.

3. USB Type-C:

- This port is used for charging devices and the Power Bank device.

WIRELESS CHARGING AREAS

Ensure that your phone and your phone case are compatible with wireless charging for a fast and optimized charge.

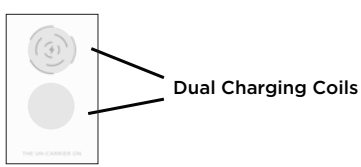

POWER BANK ASSEMBLY

Push Power Bank in designated socket with the wireless charging icon facing the adjacent phone socket.

*Close/open socket door.
*Press and hold Power Bank to lock and release.

Place phone in phone socket for charging.

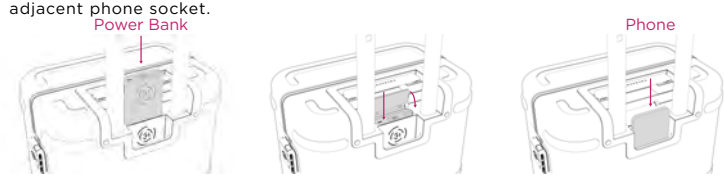

PHONE ASSEMBLY

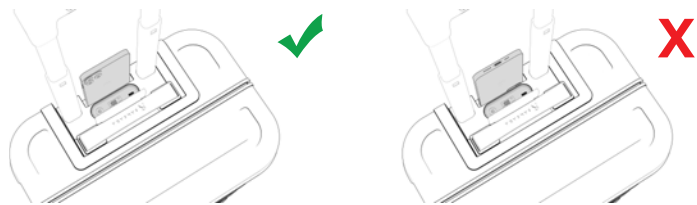
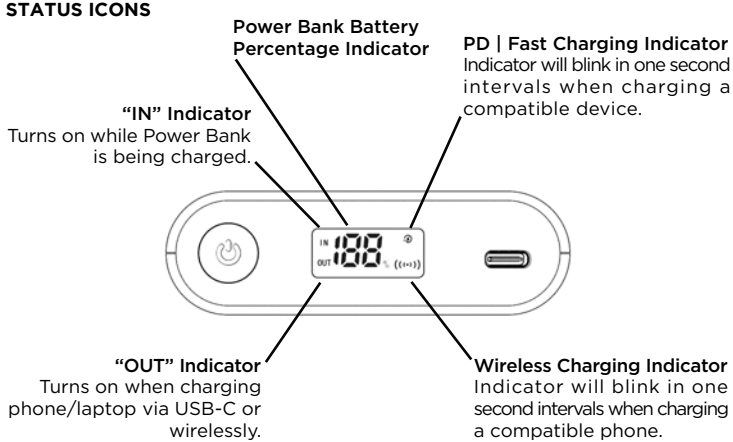
STATUS ICONS