FROM FARM TO YOU™

My Promise To You:

When I created GURUNANDA®, it was not about building another business, it was about building a brand that you can trust to deliver 100% pure and natural aromatherapy products.

I consider this business a social entrepreneurship. My mission is to bring transparency to the sourcing, testing, and labeling processes, while providing therapeutic essential oils at the most affordable, everyday prices. All without compromising on quality.

I am so confident in the purity and quality of every single drop delivered to you that each bottle bears my family name and my personal guarantee of 100% pure and natural essential oils "From Farm To You™". Nothing added, nothing removed™.

From my family to yours,

Puneet Nanda,

GURUNANDA®

Chief Essential Oil

MAINTENANCE

Maintenance

To ensure the diffuser works properly, we recommend cleaning the diffuser while changing oils, or every three days.

- Disconnect the diffuser unit from power before cleaning.
- Use a cloth to clean exterior part of the unit with water.
- Use a cotton swab or cloth to clean the water tank.
- Keep water from entering the air outlet.
- Do not use harsh detergents, solvents or abrasive agents to clean the diffuser unit.
- Use the diffuser unit on a dry and even surface.

Warning

In case of abnormal situations such as smoke, peculiar smells or sounds, any further use may result in an accident such as fire or electric shock. You should unplug the adapter immediately.

- Always use GURUNANDA® 100% pure and natural essential oil. Other brands may not be 100% pure and can cause the diffuser to malfunction. This will void the warranty.
- Never wrap the adapter with cloth or paper as it could disrupt the proper dissipation of heat, causing fire.
- Never attempt to disassemble or repair the product.
- Please keep the product out of the reach of children to avoid injury or electric shock.
- Corrosive oils such as Citronella or Cinnamon may cause damage to the unit if left in the reservoir.

WARNING

IMPORTANT SAFETY INSTRUCTIONS

WARNING: When using this appliance, basic precautions should always be followed. Including the following:

A. Read all instructions before using this product.

B. To reduce the risk of injury, close supervision is necessary when a product is used near children.

C. Do not put fingers or hands into the product.

D. Failure to follow instructions could result in a fire hazard. The appliance is only to be used with the recommended vaporizing medium. The use of other substances may give rise to a toxic or fire risk. Do not immerse this appliance in water. This appliance is for household use only.

SAVE THESE INSTRUCTIONS

Intertek

AVERTISSEMENT

CONSIGNES DE SÉCURITÉ IMPORTANTES

AVERTISSEMENT: Lorsque vous utilisez cet appareil, certaines précautions de base doivent toujours être prises, notamment :

A. Lisez toutes les instructions avant d'utiliser ce produit.

B. Pour éviter les blessures, une surveillance attentive est nécessaire lorsque l'appareil est utilisé à proximité d'un enfant.

C. Ne jamais mettre des doigts ou une main dans le produit.

D. Le non-respect de ces instructions pourrait causer un incendie. Cet appareil doit être utilisé uniquement avec le produit vaporisant recommandé. L'utilisation d'autres substances pourrait causer une intoxication ou un incendie. Ne trempez pas cet appareil dans l'eau. Cet appareil est réservé à un usage domestique.

CONSERVER CES INSTRUCTIONS

Intertek

This device complies with part 15 of the FCC Rules.

Operation is subject to the following two conditions:

(1) This device may not cause harmful interference, and (2) this device must accept any interference received, including interference that may cause undesired operation.

Changes or modifications not expressly approved by the party responsible for compliance could void the user's authority to operate the equipment.

NOTE: This equipment has been tested and found to comply with the limits for a Class B digital device, pursuant to part 15 of the FCC Rules. These limits are designed to provide reasonable protection against harmful interference in a residential installation. This equipment generates, uses and can radiate radio frequency energy and, if not in-stalled and used in accordance with the instructions, may cause harmful interference to radio communications. However, there is no guarantee that interference will not occur in a particular installation. If this equipment does cause harmful interference to radio or television reception, which can be determined by turning the equipment off and on, the user is encouraged to try to correct the interference by one or more of the following measures:

- Reorient or relocate the receiving antenna.
- Increase the separation between the equipment and receiver.
- Connect the equipment into an outlet on a circuit different from that to which the receiver is connected.
- Consult the dealer or an experienced radio/ TV technician for help.

This equipment complies with the FCC RF radiation exposure limits set forth for an uncontrolled environment. This equipment should be installed and operated with a minimum distance of 20 centimeters between the radiator and your body.

If the product needs to connect to a power supply, it must be a class 2 power supply.

GURUNANDA®

THE USB BLUETOOTH® SPEAKER AND ESSENTIAL OIL DIFFUSER

EXPERIENCE NATURE AT HOME®

WHAT IS AROMATHERAPY?

What is Aromatherapy?

Aromatherapy is the mindful use of aromatic essential oils for physical well-being. Essential oils are extracted from tree bark, flower petals, roots, stems, and the fruit of unique botanicals to provide holistic therapeutic benefits to you and your family.

To begin, simply fill your GURUNANDA® diffuser with tap water and add a few drops of your favorite GURUNANDA® 100% pure and natural essential oils. Instantly transform your environment by bringing the serenity of nature directly into your home or office space. All you have to do is breathe.

How do ultrasonic essential oil diffusers work?

GURUNANDA® essential oil diffusers use silent, ultrasonic technology to create vibrations in the water. Essential oils have a lower density than water, creating a thin layer on the surface. To preserve the quality and purity of your oils without generating heat, the oil is broken down into nanoparticles and diffused into the air as a cool mist for you to enjoy.

SPECIFICATIONS

Model: USB Bluetooth®
Capacity: 70 ML
Voltage: DC 5V
Speaker Output: 3W/4R
Frequency Response:
160 HZ-18K HZ

1. Mist Nozzle
2. Cover
3. Max. Water Line
4. Ceramic Disk
5. Water Tank
6. Air Outlet
7. Bluetooth® Button
8. Mist Button
9. Air Inlet
10. DC Plug
11. USB Cable

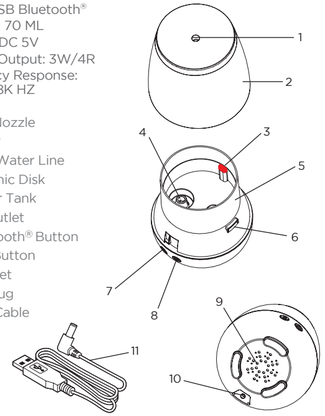

OPERATION PROCEDURE

1. Remove top cover.
2. Add about 70ml of tap water in the water tank.
   NOTE: Do not exceed the maximum water line.
3. Add 2-3 drops of essential oil into the water tank
4. Replace the top cover.
5. Plug in the USB cable.
6. Follow mist and Bluetooth® button instructions.

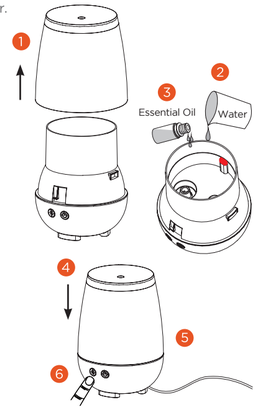

DIRECTIONS FOR USE

MIST BUTTON

1st Press: To turn mist on (continuous mode) with color changing light.

2nd Press: Mist on (continuous mode) without color changing light.

3rd Press: Mist on (intermittent mode) with color changing light.

4th Press: Mist on (intermittent mode) without color changing light.

5th Press: Power off.

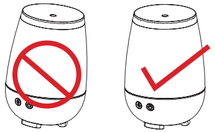

NOTE: Do not lean, move, attempt to empty or refill unit while plugged in.

BLUETOOTH® BUTTON

1. Turn on the Bluetooth® app on your device.
2. Press the Bluetooth® button on GURUNANDA® aromatherapy diffuser, and hold for two seconds to turn on. Blue color LED light will blink.
3. Find Bluetooth® connection name "GURUNANDA®" on your device and select it.
4. To turn off the Bluetooth® function, press the Bluetooth® function button and hold for five seconds.

INSTRUCTION VIDEO

For a complete instruction video visit: GuruNanda.com or on YouTube at Yogi GuruNanda.

www.GuruNanda.com

©2018 Distributed by GURUNANDA® LLC • 560 W. Lambert Rd., Suite B, Brea, CA 92821
For more information on our products visit GuruNanda.com. Questions: 866-421-0309.

TROUBLESHOOTING

Symptom	Possible Cause	Solution
Unit not working/ no mist or mist has diminished.	Power supply is not connected.	Plug in the power and press the button.
	Insufficient water.	Refill the water tank.
	Water exceeds the max. water level line.	Dump the excess water.
	Ceramic disc may be dirty.	Clean ceramic disc and water tank.
	Top cover is unsecured.	Secure the top cover.
	Air inlet is blocked or dirty.	Make sure air inlet is clean and ventilated.
	Air outlet is blocked or dirty.	Make sure air outlet is clean and ventilated.
No Bluetooth® Connection	Device can't pair to Bluetooth® Diffuser.	Turn on your Bluetooth® pairing device and connect to GURUNANDA® Diffuser.
	Can't find the GURUNANDA® app	Check that your Bluetooth® function is turned on.

V020118