Android Tablet

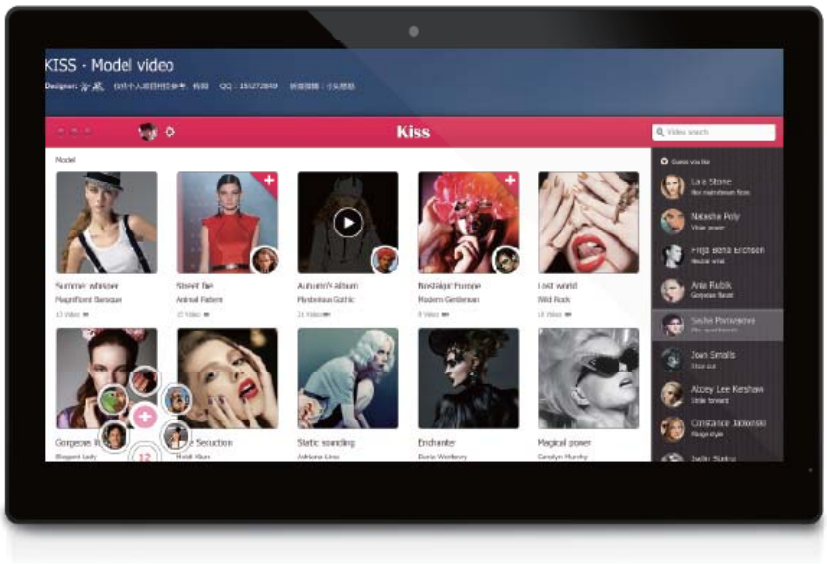

User Manual

(14" / 15.6" / 18.5" / 21.5" / 24" / 27" / 32" / 43" / 55")

Contents

Notes of Importance 2
Features..... 3
Package Contents..... 4
Drawing..... 5
Getting Started..... 17
Main menu..... 18
Power On/Off..... 18
Access to The Application 19
Wireless Internet..... 19
Install APK..... 20
Uninstall APK..... 21
Date Transmission..... 22
Factory Reset..... 23

Notes of Importance

1)Please keep the device away from excess temperature (50℃ above), too cold (-10℃ below)or wet place.

2)Do not grievous hit the device or place something heavy on it.

3)Only use the accessories specified by the manufacturer.

4)Please keep the device away from benzene, diluents or other chemical.

5)Keep the device away from water.

6)The product should be serviced by the professional serviceman, do not try to service it by yourself.

7)Please unplug the power plug of the product when not in use for a long time or during the rainstorm.

8)In order to avoid damaging the touch panel, never place the heavy or sharp objects on the touch panel when use or transport it.

9)Arrange all cables and cords so that people and pets are not likely to trip over or accidentally pull on them move around or walk through the area. Do not allow children to play with cables and cords.

Features

- ◆ LCD full HD screen,LED backlight
- ◆Quad core processor,Cortex-A17
- ◆Android 5.1 O/S
- ◆10-Point capacitive touch
- ◆SD card slot
- ◆Wifi 802.11b/g/n
- ◆Camera(43" / 55" Without Camera)
- ◆Buletooth 4.0
- ◆HDMI Output

Package Contents (43" / 55")

Android Tablet

User manual

Power cable

Please make sure all of the following are present when you unpack your Android Tablet.

Package Contents (14" / 15.6" / 18.5" / 21.5" / 24" / 27" / 32")

Android Tablet

Power adapter

Power cable

User manual

Screw-in stand(14"/15.6")

Stand(18.5"/21.5"24"/27")

32" Stand

Screw(18.5"/21.5"24"/27")

Drawing (14″)

Serial number	Function
1	Camera
2	SD card
3	Earphone
4	Mini USB
5	USB
6	Microphone
7	HDMI
8	DC In

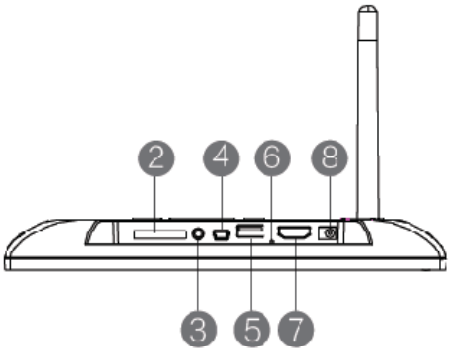

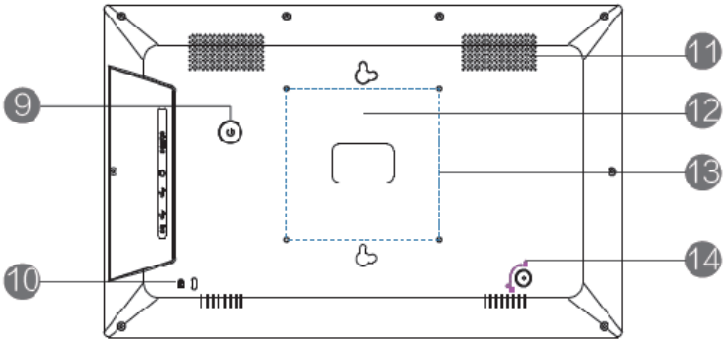

Serial number	Function
9	Power
10	Kensington Lock
11	Speaker
12	Keyholes for Wall-Mounting
13	VESA
14	Stand

Drawing (15.6")

Serial number	Function
1	Camera
2	Microphone
3	Power
4	Kensington Lock
5	Speaker
6	Keyholes for Wall-Mounting
7	VESA
8	Stand

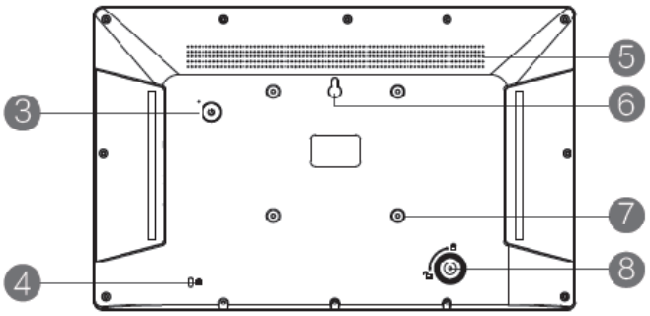

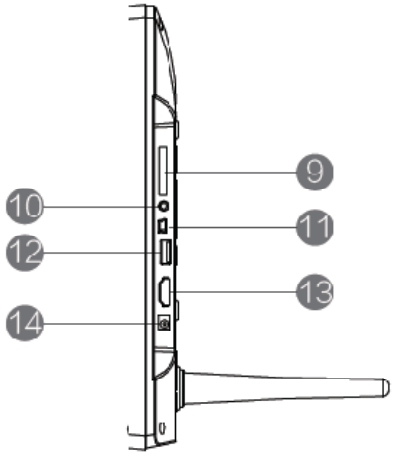

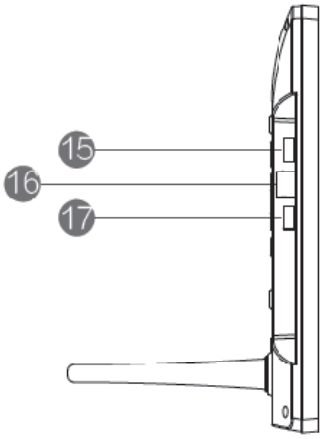

Serial number	Function
9	SD Card
10	Earphone
11	Mini USB
12	USB
13	HDMI
14	DC In
15	USB
16	RJ45
17	USB

Drawing (18.5" / 21.5")

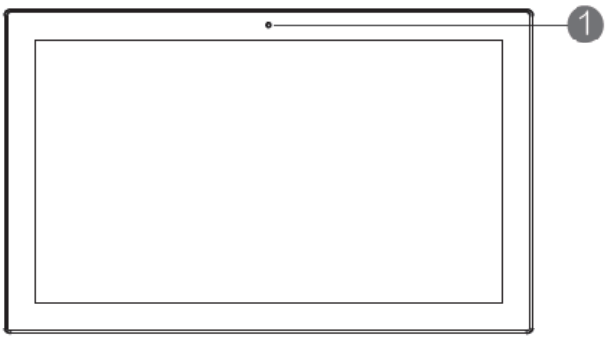

Serial number	Function
1	Camera
2	Power
3	Stand
4	Keyholes for Wall-Mounting
5	VESA
6	Speaker
7	Kensington Lock

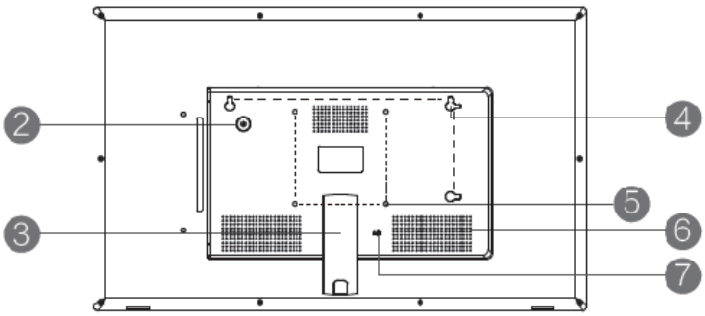

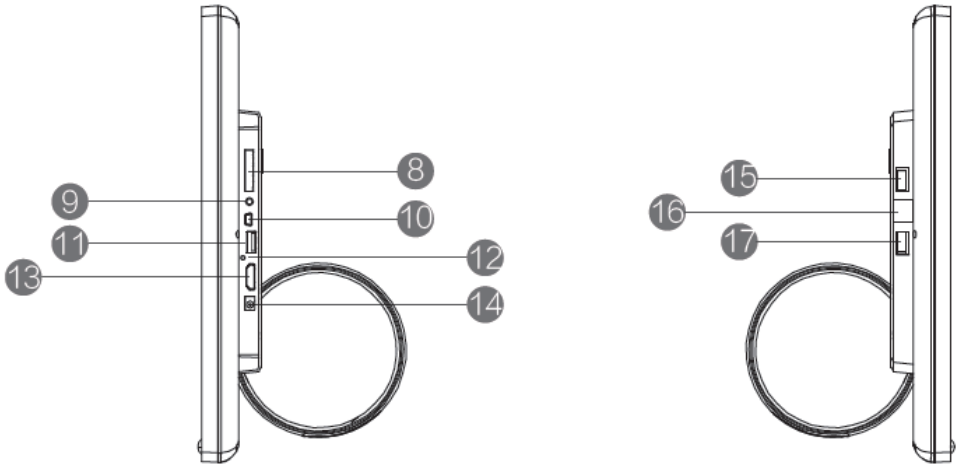

Serial number	Function
8	SD Card
9	Earphone
10	Mini USB
11	USB
12	Microphone
13	HDMI
14	DC In
15	USB
16	RJ45
17	USB

Drawing (24“ / 27")

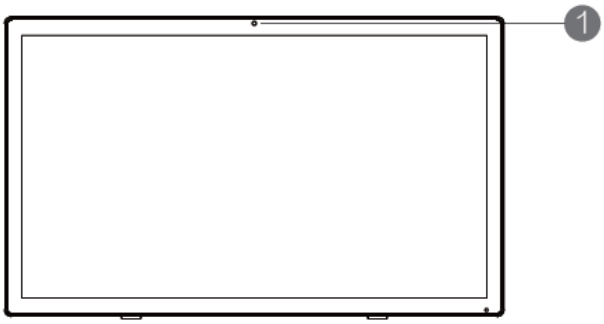

Serial number	Function
1	Camera
2	Power
3	Stand
4	VESA
5	Speaker

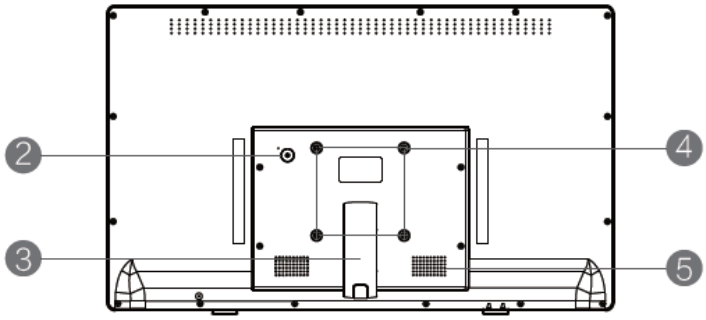

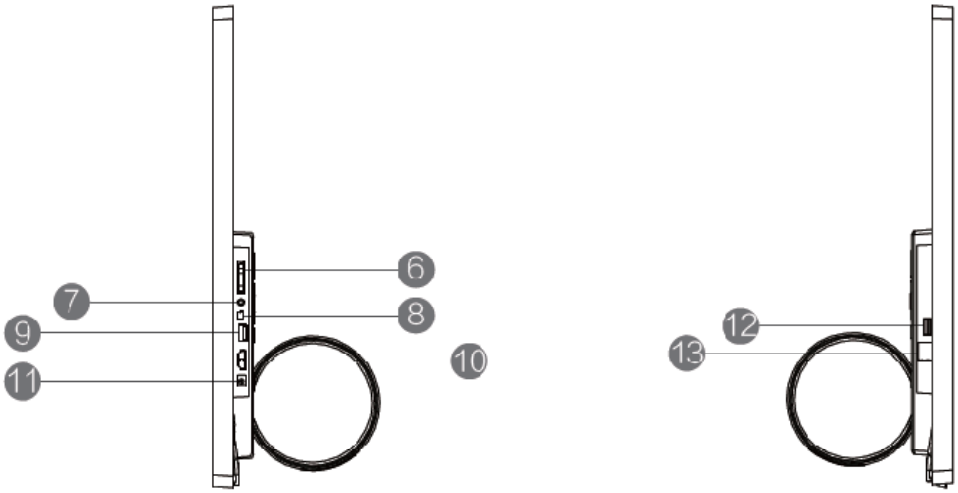

Serial number	Function
6	SD Card
7	Earphone
8	Mini USB
9	USB
10	HDMI
11	DC In
12	USB
13	RJ45

Drawing (32")

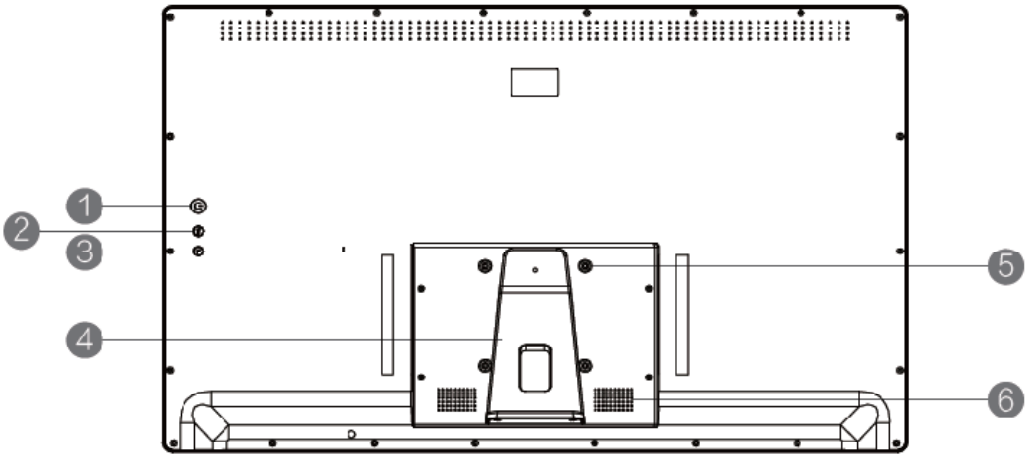

Serial number	Function
1	Power
2	Volume +
3	Volume -
4	Stand
5	VESA
6	Speaker

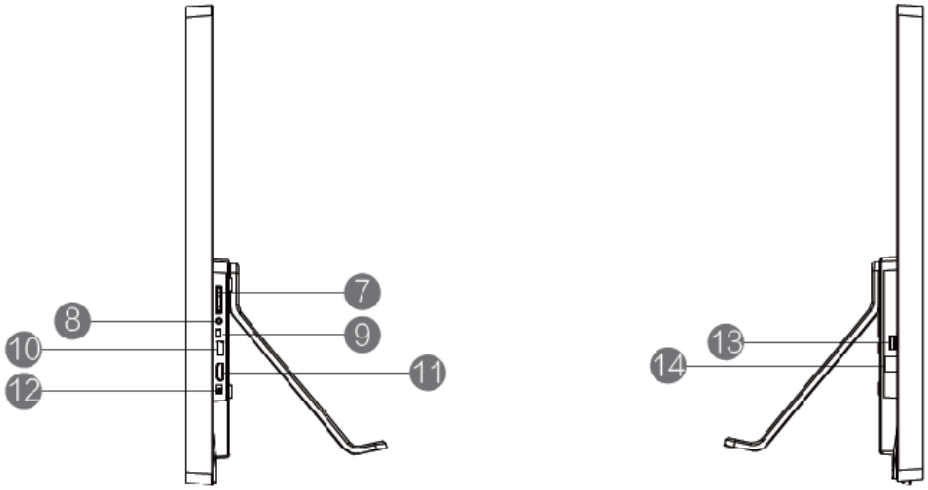

Serial number	Function
7	SD Card
8	Earphone
9	Mini USB
10	USB
11	HDMI
12	DC In
13	USB
14	RJ45

Drawing (43“ / 55")

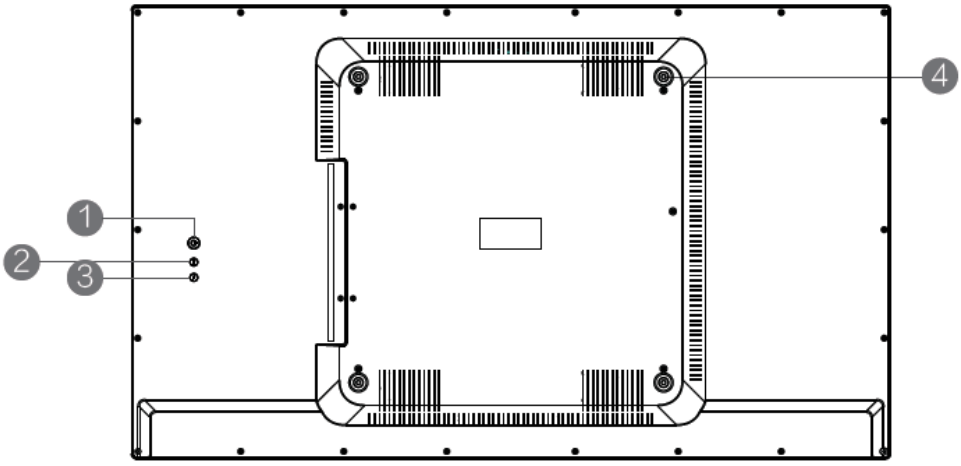

Serial number	Function
1	Power
2	Volume +
3	Volume -
4	VESA

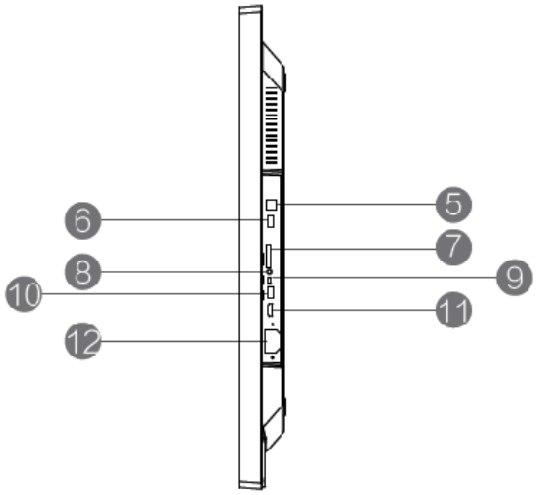

Serial number	Function
5	RJ45
6	USB
7	SD Card
8	Earphone
9	Mini USB
10	USB
11	HDMI
12	AC In

Getting Started

1) To setup your Android Tablet, you first need to attach the stand.

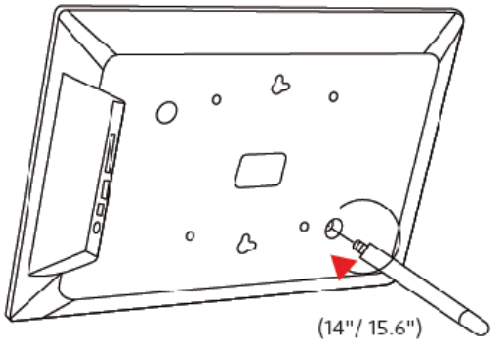

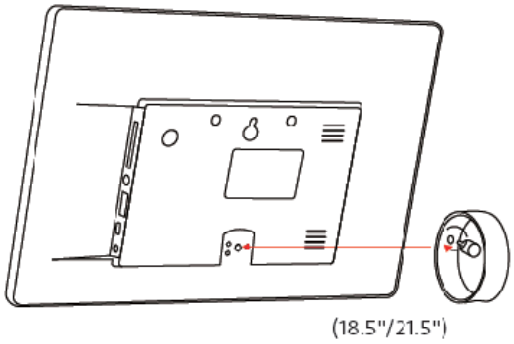

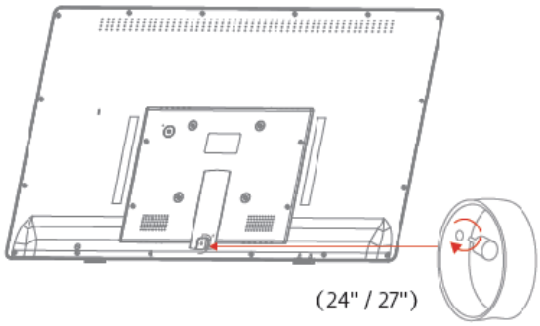

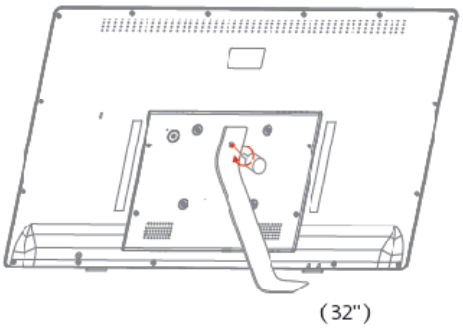

2) Place the frame horizontally on a flat surface.

3) insert the power lead into the android's DC socket.

4) The android tablet will automatically start up.

Main Menu

1)Insert the power lead into the DC socket, and then insert the other end into the power socket.

2)Turn on the product by holding the power button for 3 seconds.

3)Screen will show the starting logo.

4)Wait for about 30 seconds and enter into main interface.

Power On/ Off

1)Power on: turn on the device by holding the power button for 3 seconds when the product power off.

2)Power off: holding the power button for 3 seconds and click ok to power off when the product at working status.

3)Short press power button for sleep or awake the product when the product standby.

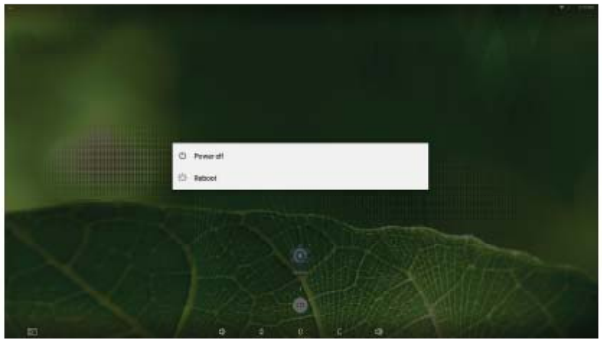

Access to The Application

1)In the main menu， click icon to go to APPS menu screen.

2)Slide the screen leftward/rightward fast, switch to the other menu screen.

3)Click the apps icon to enter into apps click the “RETURN” icon, return to previous page，click the “HOME”icon return to the main menu.

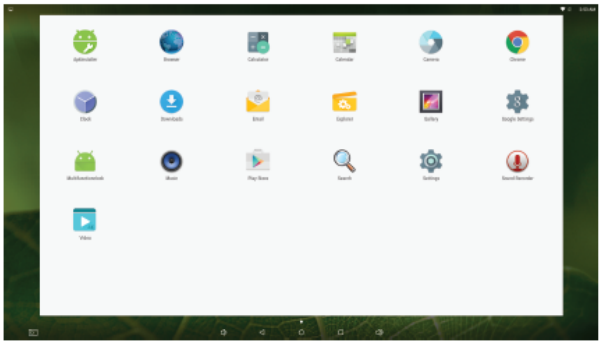

Wireless Internet

1)Enter into the settings and turn on the Wi-Fi, connect to the available networks.

2)Enter into the APPS and click the ‘browser’, then you will get into the google homepage.

3)You can input the website on the top that you like, or you can search the interesting news and videos by the google search.

Install APK

1) Copy the file of APK format to your device or SD card.

2) Click the that in APPS, then you will enter into the 'APK Installer', select 'install', as the following picture:

3) Click the APK which you want to install, as the following pictures:

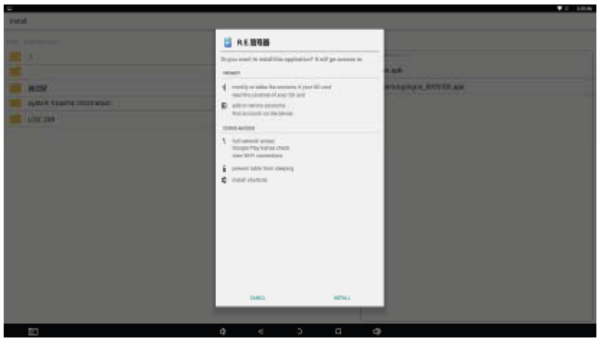

After installing the APK, you can click the APK icon in the apps to enjoy the application.

Uninstall APK

1) Click the 'settings' in the APPS, enter into 'settings''APPS''DOWNLOADED', select which application would you want to uninstall, as the following picture:

2) Select and click the Uninstall button to uninstall this application, as the following picture:

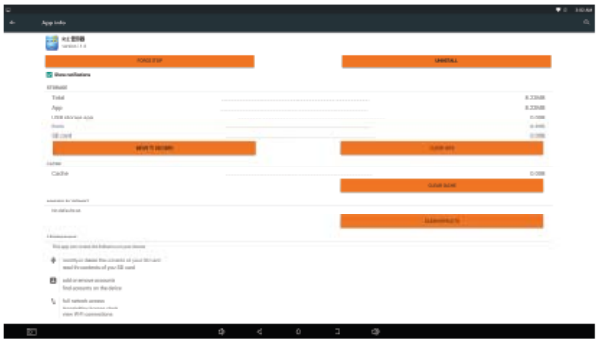

Date Transmission

Connecting PC and device by using USB cable, USB icon will be appeared on the upper left side of status bar， it refers to USB has been connected. As follows:

When the operation menu appeared, click "USB connected":

Click "Turn on USB storage" on prompted window

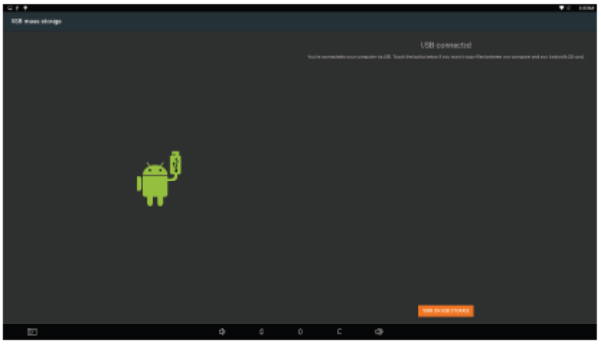

At this time, you can find device storage card and SD card (if the card has been plugged in) in my computer list.

After data transmission,click"Turn off USB storage", and then it will quit the data transmission state.

Factory Reset

If your device has been contracted the virus, or worked unexpectedly by installing third-party applications, then you can erase all data from your device via reset tablet.

Operation: click 'Settings' 'Backup & reset' 'factory data reset', then click the 'reset tablet' and 'erase everything', as the following picture:

This symbol on the product or in the instructions means that your electrical and electronic equipment should be disposed of at the end of its life separately from your household waste. There are separate collection systems for recycling in your country. For more information, please contact the local authority or your retailer where you purchased the product.

FCC Statement

This equipment has been tested and found to comply with the limits for a Class B digital device, pursuant to part 15 of the FCC rules. These limits are designed to provide reasonable protection against harmful interference in a residential installation. This equipment generates, uses and can radiate radio frequency energy and, if not installed and used in accordance with the instructions, may cause harmful interference to radio communications. However, there is no guarantee that interference will not occur in a particular installation. If this equipment does cause harmful interference to radio or television reception, which can be determined by turning the equipment off and on, the user is encouraged to try to correct the interference by one or more of the following measures:

-Reorient or relocate the receiving antenna.

-Increase the separation between the equipment and receiver.

-Connect the equipment into an outlet on a circuit different from that to which the receiver is connected.

-Consult the dealer or an experienced radio/TV technician for help.

To assure continued compliance, any changes or modifications not expressly approved by the party.

Responsible for compliance could void the user's authority to operate this equipment. (Example- use only shielded interface cables when connecting to computer or peripheral devices).

This equipment complies with Part 15 of the FCC Rules. Operation is subject to the following two conditions:

(1) This device may not cause harmful interference, and

(2) This device must accept any interference received, including interference that may cause undesired operation.

FCC Radiation Exposure Statement:

The equipment complies with FCC Radiation exposure limits set forth for uncontrolled enviroment. This equipment should be installed and operated with minimum distance 20cm between the radiator and your body.

.