Connected Products and Services

Nexeed Track and Trace

Sense S | Sense T User Guide

Version 1.5

Bosch Connected Industry

© Robert Bosch Manufacturing Solutions GmbH, 2019. All rights reserved, also regarding any disposal, exploitation, reproduction, editing, distribution, as well as in the event of applications for industrial property rights.

Contents

1 Safety Notes and Handling Information. 4
2 Hints for This Document. 5
3 Introduction. 6
4 Radio Frequency Radiation Exposure and Further Information. 7
5 Technical Specifications. 8
6 Ordering Information. 10
7 Mounting. 11
8 Operation. 14
9 Dimensions. 15
10 Handling and Shipping Information. 16
11 Support. 18
12 Disposal. 19
13 Regulatory Notes. 20
14 Open Source Software. 22
15 Intended Use. 23

© Robert Bosch Manufacturing Solutions GmbH

1 Safety Notes and Handling Information

⚠ CAUTION

Lithium Battery

The device contains a lithium battery. Handling the battery incorrectly could cause fire. Read and follow the valid transportation regulations.

- Do not damage or cut the device.
- Do not dispose of the device in fire.
- Do not expose the device to higher temperatures than defined in this datasheet.
- Do not expose the device to direct sunlight.
- Do not mount the device on exposed positions on logistics assets that can cause detachment of the product.

⚠ WARNING

Do only use this device if mounting does not harm any persons or objects.

© Robert Bosch Manufacturing Solutions GmbH

2 Hints for This Document

Meaning of the used signal words

DANGER!

Indicates risk situations and threats to the life and health of individuals. Failure to comply with this warning can lead to life-threatening situations.

- These instructions must be obeyed.

WARNING

Indicates a hazardous situation in which the user must act as indicated.

- These instructions should always be followed.

CAUTION

Indicates precautionary measures or/and a hazard that may result in minor or moderate injury.

- These instructions must *always* be observed.

Meaning of Info and Tip

INFO

General information and/or instructions.

- These instructions must be observed.

TIP

Practical hints.

3 Introduction

By being attached to the asset and measuring environmental parameters such as temperature and shock events, the Sense S and Sense T sensors make the management of assets and material flow transparent and traceable.

Tracking data and measured values are transferred to the Bosch IoT Cloud via Bosch Connect gateways or mobile applications.

The Sense S and Sense T sensors are battery-operated devices for asset tracking, freight tracking, and other tracking or monitoring use cases.

Both sensor types use a 2.4 GHz Low Energy radio and an RFID UHF interface to communicate with corresponding receivers for data transmission and configuration.

The Sense S and Sense T sensors provide

- Unique visual ID (GIAI code) as DMC readable by standard scanner applications
- Unique electronic ID transmitted via 2.4 GHz wireless technology to be captured by Bosch Connect gateways or standard Android smartphone apps
- Temperature value for the ambient condition
- Shock intensity value measured by the integrated acceleration sensor (Sense S only)
- Battery-assisted passive RFID interface to read the electronic ID

Application Advantages

- Long battery lifetime resulting in less handling effort
- Simple and fast to mount
- Very compact design
- Maintenance-free device
- Extremely robust device
- No configuration required
- Prepared for usage on board of airplanes
- Enables tracking transparency within the supply chain
- Creates valuable information about assets conditions

© Robert Bosch Manufacturing Solutions GmbH

4 Radio Frequency Radiation Exposure and Further Information

The radiated output power of the device is far below the FCC radio frequency exposure limits. Nevertheless, the device shall be used in such a manner that the potential for human contact during normal operation is minimized.

5 Technical Specifications

Measurement parameters

Sense S	Temperature, Peak Acceleration, Shock Intensity
Sense T	Temperature

Technical data

Dimension (L x W x H)		35 mm x 35 mm x 11.5 mm
Weight		approx. 21 g
Power supply		CR2032
Battery life		
	Sense S	> 3 years ⓘ based on ambient temperature conditions (+25°C) and usage in standard transportation use cases
	Sense T	> 5 years ⓘ based on ambient temperature conditions (+25°C)
RFID		2 m ... 4 m range Battery-assisted passive wireless interface operating at a global frequency range of 856 MHz to 960 MHz. Supported region-specific UHF communication frequencies: • 865 MHz ... 869 MHz (Europe) • 902 MHz ... 928 MHz (US) • 952 MHz ... 956 MHz (Japan)
Wireless transmission		
	Technology	IEEE 802.15.1 2.4 GHz ISM Band
	Protocol	Proprietary
	Range/Power	> 50 m free line of sight / < 0 dBm
	Transmission interval	15 s
Temperature measurement		
	Accuracy, typical	± 1.0°C for -30°C ... 60°C ± 0.6°C for -1°C ... 13°C
	Accuracy, maximum	± 2.0°C for -30°C ... 60°C

© Robert Bosch Manufacturing Solutions GmbH

		± 1.5°C for -1°C ... 13°C
	Time constant	< 15 min for T_{63}
	Sampling interval	5 min
Shock measurement Sense S		
	Acceleration per axis	± 8 g
	Acceleration, three-dimensional	± 13.8 g
	Sampling	100 Hz
Housing		
	Material	Plastic PA6
	Potting material	PU
	EN 60529 protection category	IPx7
Certifications		RoHS, CE, FCC, DO-160 further on request

Operating conditions

Operating temperature	-30°C ... +60°C
Storage temperature	+10°C ... +30°C
Storage time	6 months ⓘ long storage can reduce battery life
Humidity	20 % rH ... 100 % rH, (non-condensing)

Air transport

Time-critical goods are usually shipped using the fastest possible ways. Therefore, air freight becomes very relevant.

Sense S and Sense T have been validated for air transport according to DO-160 and have been approved by EASA for use in air planes with active wireless transmission.

Based on this approval every airline decides individually about the use of Sense S / Sense T in their airplanes. Please consult your airline.

An overview of airlines that have approved Sense S / Sense T can be found at https://www.bosch-connected-industry.com/en/connected-logistics/nexeed-track-and-trace/approvals-and-clearances/approvals-1.html.

6 Ordering Information

	Order number
Sense S	3843.AU2.679
Sense S	3843.AX1.368
Sense T	3843.AU2.678
Mounting Fixture	3843.AV5.373
Mounting Plate	3843.AW1.884

For any sales information or support, please contact Bosch Connected Industry at support.tnt@de.bosch.com.

© Robert Bosch Manufacturing Solutions GmbH

7 Mounting

WARNING

The fixation must be guaranteed at all times. Do only use this device if mounting does not harm any persons or objects.

- Mounting is restricted to trained personnel *only*.

WARNING

In cases of vehicles or objects exposed to high acceleration or vehicles and objects with high acceleration effecting the device, mounting the device using magnets, adhesives, or tape is not eligible.

- Mounting with screws is required.

In general, the Sense S and Sense T sensors can be mounted in any position as required. For a robust attachment of the device to the asset, Bosch Connected Industry recommends:

- available mounting fixture 3843.AV5.373
- available mounting plate 3843.AW1.884
- available mounting cover 3843.AW3.380

In case of shock measurement, a direct non-absorbing connection between the Sense S and the monitored asset is required. To achieve this, we recommend using the mounting fixture (see Figures below).

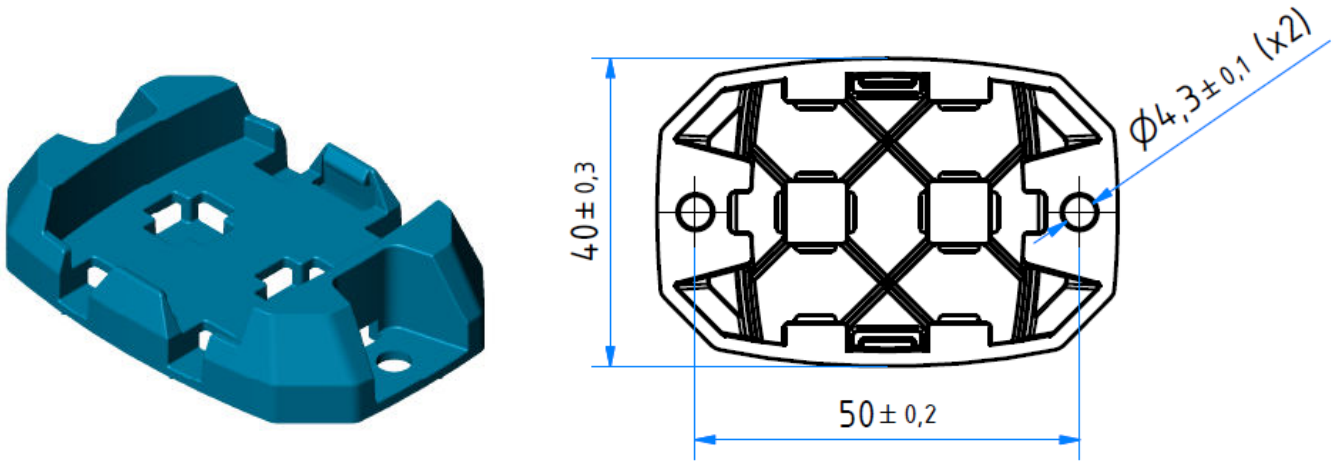

Mounting Fixture 3843.AV5.373

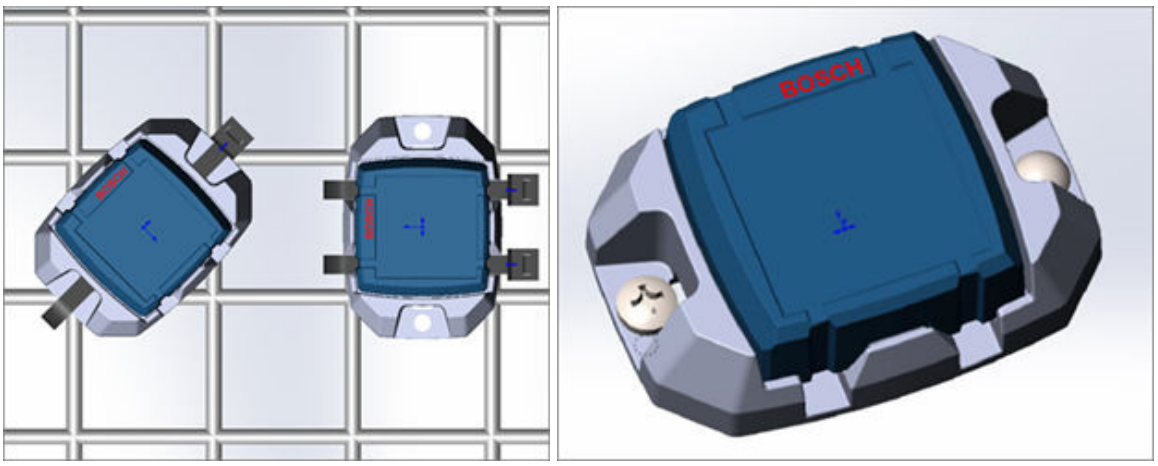

Mounting Fixture with Sensor on a Lattice Box (on the left-hand side) and screwed (on the right-hand side)

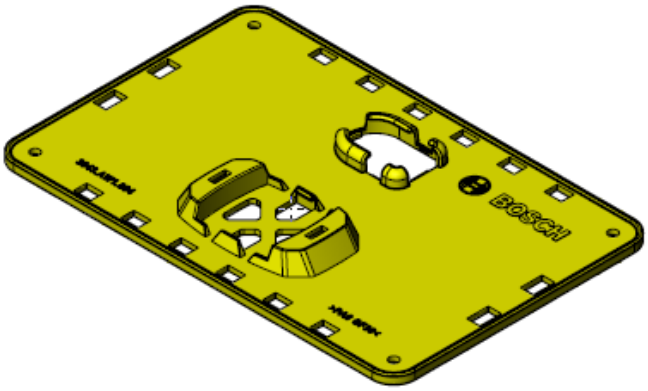

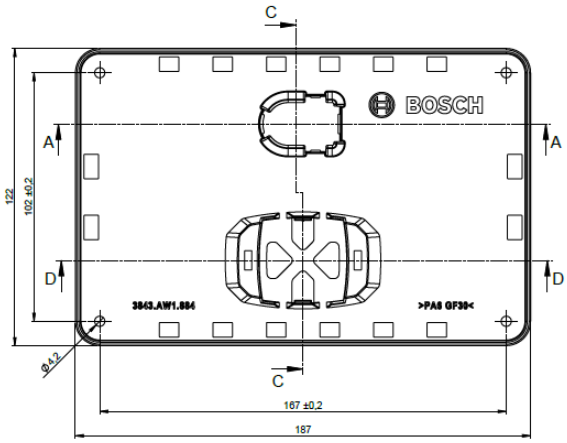

Mounting Plate 3843.AW1.884

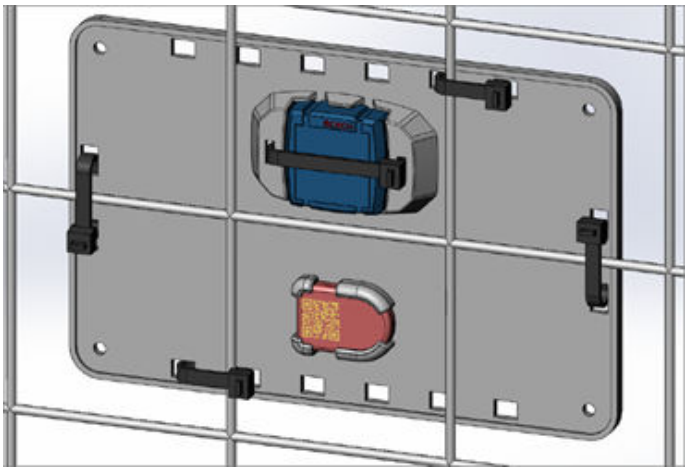

Mounting Plate with Sensor on a Lattice Box

© Robert Bosch Manufacturing Solutions GmbH

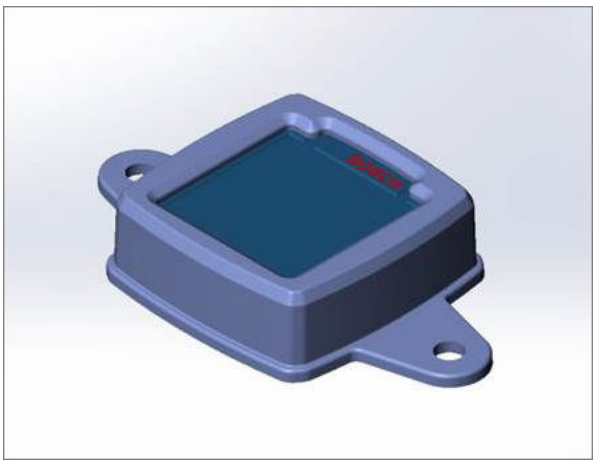

Mounting Cover 3843.AW3.380

INFO

Mounting

When mounting the device, consider the following information:

- To enable wireless transmission, do not place the device inside metal enclosures and do not cover the device with metal.
- To enable wireless transmission, do not place the device inside liquids.
- Avoid positions that hinder logistics operation in a warehouse, terminal etc.
- Avoid positions hotter than allowed for this device (refer to Technical Specifications).
- Avoid covering barcodes on any labels attached to the logistic asset.
- Ensure robust attachment of the device to the asset by using recommended mounting fixtures.

© Robert Bosch Manufacturing Solutions GmbH

8 Operation

The 2.4 GHz Low Energy radio is a 802.15.1-compatible wireless communication interface. The device is transmitting information packages in configurable constant intervals (e.g. every 15 s) on frequencies 2.402 GHz, 2.426 GHz, and 2.480 GHz.

The RFID UHF radio interface is a battery-assisted passive wireless inferface operating at a global frequency range of 856 MHz to 960 MHz.

Supported region-specific UHF communcation frequencies:

- 865 MHz ... 869 MHz (Europe)
- 902 MHz ... 928 MHz (US)
- 952 MHz ... 956 MHz (Japan)

An external reader device activates the RFID communication.

RFID communication can read and write information to the Sense S and Sense T sensors.

Activation

The Sense S and Sense T sensors are delivered with activated measurement of environmental parameters and wireless transmission. An activation or configuration is not required.

Operation

The Sense S and Sense T sensors automatically measure the environmental parameters and transmit measured data together with electronic device IDs via the integrated wireless 2.4 GHz interface.

Within the Nexeed Track and Trace solution, the data is received and processed by Bosch Connect gateways. The gateways transfer the received data with additional gateway data to the Bosch IoT Cloud.

Temperature Measurement

Temperature values are captured by Sense S and Sense T sensors every 5 minutes. The Sense S and Sense T sensors can provide an actual temperature with a resolution of 0.5°C/digit to the Bosch IoT Cloud in case of a gateway in range during measurement.

Shock Measurement

The Sense S is able to detect and measure shock events. A shock measurement is triggered when an acceleration value of more than 3g occurred at least in one axis.

A shock is characterized with two parameters:

Peak acceleration	Three-dimensional peak acceleration value with a resolution of 0.5 g.
Shock intensity	Digital integration of all acceleration samples > 3g during a shock event over time. Resolution is 25 gms.

© Robert Bosch Manufacturing Solutions GmbH

9 Dimensions

The following figure shows the dimensions of the Sense S and Sense T sensors.

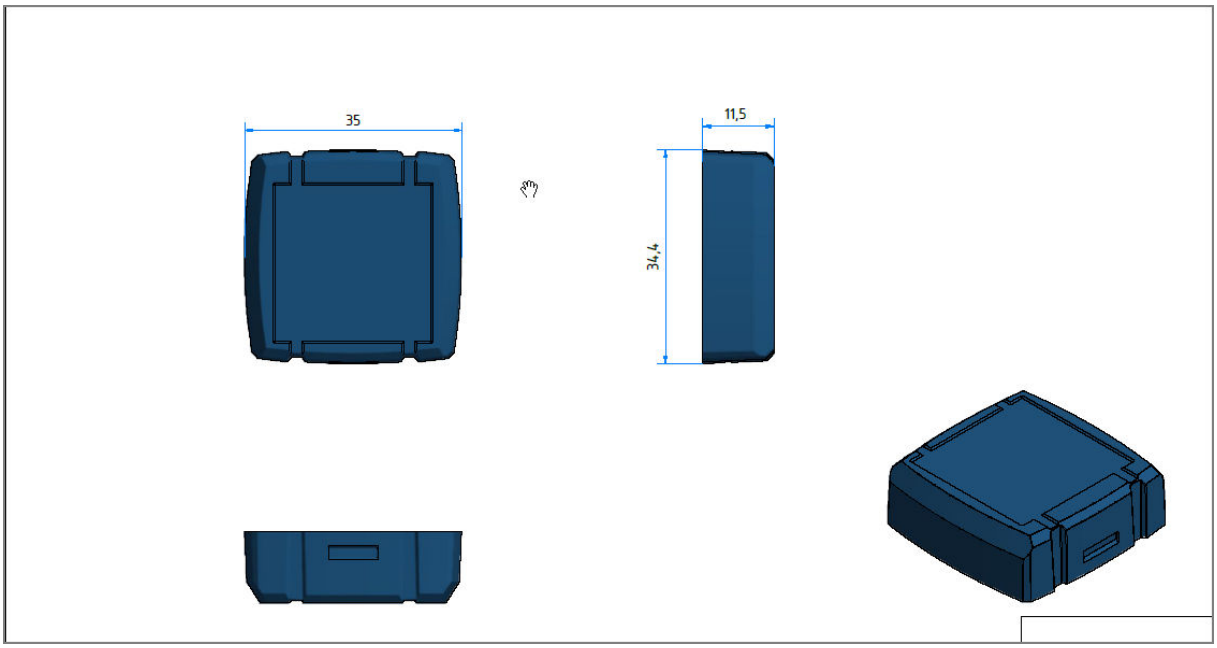

10 Handling and Shipping Information

Device

Sense T	Order number:	3843.AU2.678
Sense S	Order number:	3843.AU2.679

Battery

Battery Type	Lithium Metal Battery (Coin cell)
Battery Model	CR2032 MFR
Energy Content	0.675 Wh
Weight of Battery	approx. 2.8 g
Lithium Content	< 0.25 g
Transport Test	according to part III, section UN38.3

Additional documents (on request)

- Datasheet of battery
- Article Safety Data Sheet of battery
- UL registration at MH14002

Regulations for shipping of one or multiple Sense S / Sense T and Usage of Sense S / Sense T as tracking devices on assets

Road/Rail/Ocean transport

UN classification	Road: UN 3091 Lithium-Metall-Batterien contained in equipment, 9 (E) Rail: 90 UN 3091 Lithium Metal Batteries contained in equipment, 9 Ocean: UN 3091 Lithium Metal Batteries contained in equipment, 9
Instructions	ADR/RID SV 188 IMDG Code SP 188 Application of SV188 / SP188, because Lithium contained is < 2 g
Packaging	Protection of battery by housing of device and potting of battery. No special packaging requirements.
Marking	No marking required due to coin cell battery type contained in equipment.
Documentation	n/a

Air Transport PAO/CAX

Air freight ready

Sense S and Sense T have been validated for air transport according to DO-160 and have been approved by EASA for use in air planes with active wireless transmission.

Based on this approval every airline decides individually about the use of Sense S / Sense T in their airplanes. Please consult your airline.

An overview of airlines that have approved Sense S / Sense T can be found at https://www.bosch-connected-industry.com/en/connected-logistics/nexeed-track-and-trace/approvals-and-clearances/approvals-1.html.

© Robert Bosch Manufacturing Solutions GmbH

UN classification	UN 3091 Lithium Metal Battery contained in equipment, 9
Special facilities	Application of section II of PI 970 IATA because Lithium contained is < 2 g.
Instructions	IATA PI970 part II Requirements according to UN 3091 Lithium Metal Batteries contained in equipment, 9, section II of packaging instruction PI970 apply for PAX and CAO. Maximum net weight of batteries for PAX and CAO is 5 kg
Packaging	Protection of battery by housing of device and potting of battery. No special packaging requirements.
Marking	No marking required due to coin cell battery type contained in equipment.
Dokumentation	n/a

11 Support

For any questions or inquiries, please contact Nexeed Track and Trace support at support.tnt@de.bosch.com.

© Robert Bosch Manufacturing Solutions GmbH

12 Disposal

Disposing this product correctly will help save valuable resources and prevent any potential negative effects on human health and the environment, which could otherwise arise from inappropriate waste handling.

Take into account the respective national regulations, since improper disposal may otherwise be subject to penalties.

For the return of devices within the EU, follow the instructions below.

Stellt der Auftraggeber eine Beschädigung bzw. einen Defekt der Hardware fest, muss er die Sicherheit der betroffenen Hardware prüfen, diese erforderlichenfalls außer Betrieb nehmen, und soweit Bosch Eigentümer der Hardware ist oder soweit die Hardware noch in der Gewährleistung ist, an Bosch zurücksenden. In jedem Fall, als auch den, wenn Bosch kein Eigentümer des Geräts sein sollte oder das Gerät nicht mehr in der Gewährleistung sein sollte, ist bei der Entsorgung zu beachten, dass das Gerät, die Zubehörteile und die Verpackung umweltfreundlich getrennt zu entsorgen sind; alle elektrischen und elektronischen Geräte, die nicht mehr benutzbar sind, muss der Auftraggeber an Bosch zurücksenden bzw. Bosch kontaktieren unter support.tnt@de.bosch.com, um das Einsammeln durch Bosch zu veranlassen.

Disposal according to the WEEE Directive 2012/19/EU

WEEE-Reg.-No. DE 80087893

The unit, accessories, and packaging should be sorted for environmental-friendly recycling. Do not dispose of the device into the household waste! According to the European Guideline 2012/19/EU, electric and electronic devices that are no longer usable must be collected separately and disposed of in an environmentally correct manner.

Bosch Connected Industry will collect, reuse, or recycle all used Bosch Connected Industry devices.

To have your device collected, please contact us at: support.tnt@de.bosch.com.

13 Regulatory Notes

EU Declaration of Conformity

Hereby, Robert Bosch Manufacturing Solutions GmbH – Bosch Connected Industry declares that the radio equipment type Sense S and Sense T is in compliance with Directive 2014/53/EU.

The full text of the EU declaration of conformity is available at the following internet address:

http://eu-doc.bosch.com
Model Search: *Sense*

Operating the device in countries out of the EU

The Sense S and Sense T carry the CE mark and are certified for operation in the European Union. For countries out of the EU validate that local legal regulation allows the operation of the Sense S and Sense T.

Export Restrictions

Due to legal regulations, the device must not be exported into the following countries or regions: Cuba, Crimea, Iran, North Korea, Syria, and Ukraine.

Federal Communications Commission (FCC) Notice

FCC has issued an EQUIPMENT AUTHORIZATION to Robert Bosch Manufacturing Solutions GmbH – Bosch Connected Industry for Sense S and Sense T according to FCC rule parts 15 C with the FCC ID according to the following table:

	Order number	FCC ID
Sense S	3843.AU2.679	2AOSY-SENSE01
Sense S	3843.AX1.368	2AOSY-SENSE02

FCC warning statement:

- This device complies with Part 15 of the FCC Rules.
  Operation is subject to the following two conditions:
  (1) This device may not cause harmful interference, and
  (2) This device must accept any interference received, including interference that may cause undesired operation.
- This equipment complies with FCC radiation exposure limits set forth for an uncontrolled environment. End users must follow the specific operating instructions for satisfying RF exposure compliance. This transmitter must not be co-located or operating in conjunction with any other antenna or transmitter.
- Changes or modifications not expressly approved by the party responsible for compliance could void the user's authority to operate the equipment

Note:

This device has been tested and found to comply with the limits for a Class B digital device pursuant to Part 15 of the FCC rules. These limits are designed to provide reasonable protection against harmful interference in a residential installation.

This equipment generates, uses, and can radiate radio frequency energy and, if not installed and used in accordance with the instructions, may cause harmful interference to radio communications.

However, there is no guarantee that interference will not occur in a particular installation. If this equipment does cause harmful interference to radio or television reception, which can be determined by turning the equipment off and on, the user is encouraged to try to correct the interference by one or more of the following measures:

© Robert Bosch Manufacturing Solutions GmbH

- Reorient or relocate the receiving antenna.
- Increase the separation between the equipment and receiver.
- Connect the equipment into an outlet on a circuit different from that to which the receiver is connected.
- Consult the dealer or an experienced radio/TV technician for help.

14 Open Source Software

This product does not include Open Source Software.

© Robert Bosch Manufacturing Solutions GmbH

15 Intended Use

The Sense S and Sense T sensors are designed according to the information provided in section Technical Specifications of this document. Any use or operation which requires specific requirements and standards which are not explicitly mentioned in this document must be validated and tested on the customer's own responsibility.

The housing of the Sense S and Sense T sensors is not to be opened or tampered with. The Sense S and Sense T sensors are designed for use within environmental conditions as further detailed in the technical specifications in section Technical Specifications. Any intent to use or operate the product under deviating environmental conditions must be subject to renewed validation and testing by the customer.

Neither the Sense S and Sense T sensors nor a potential product derivation, are designed, intended, or authorized for use as components in systems intended for surgical implant into the body, or other applications intended to support or sustain life, or for any other application in which the failure of the Bosch product could create a situation in which personal injury or death may occur. The same applies for any kind of weapon, any device, or application which is potentially dangerous to human life.

The Sense S and Sense T sensors are designed for monitoring and tracking purposes and shall not be used as an element of control and safety in machines under the scope of the Machinery Directive 2006/42/EC.

Bosch Connected Industry shall not hold liable for any damages resulting from any use of the Sense S and Sense T sensors outside/beyond the certified types of operation and/or defined field of application.

Radio frequency radiation exposure information: this equipment complies with the radiation exposure limits prescribed for an uncontrolled environment for fixed and mobile use conditions.

© Robert Bosch Manufacturing Solutions GmbH

Your feedback helps us to continuously improve our products and components. Please submit any questions, comments or suggestions for improvement via our Contacts web page.

Robert Bosch Manufacturing Solutions GmbH
BCI – Bosch Connected Industry
Wernerstr. 51
70469 Stuttgart
GERMANY

https://www.bosch-connected-industry.com