smart lock
JR8-V1.0A
usage description

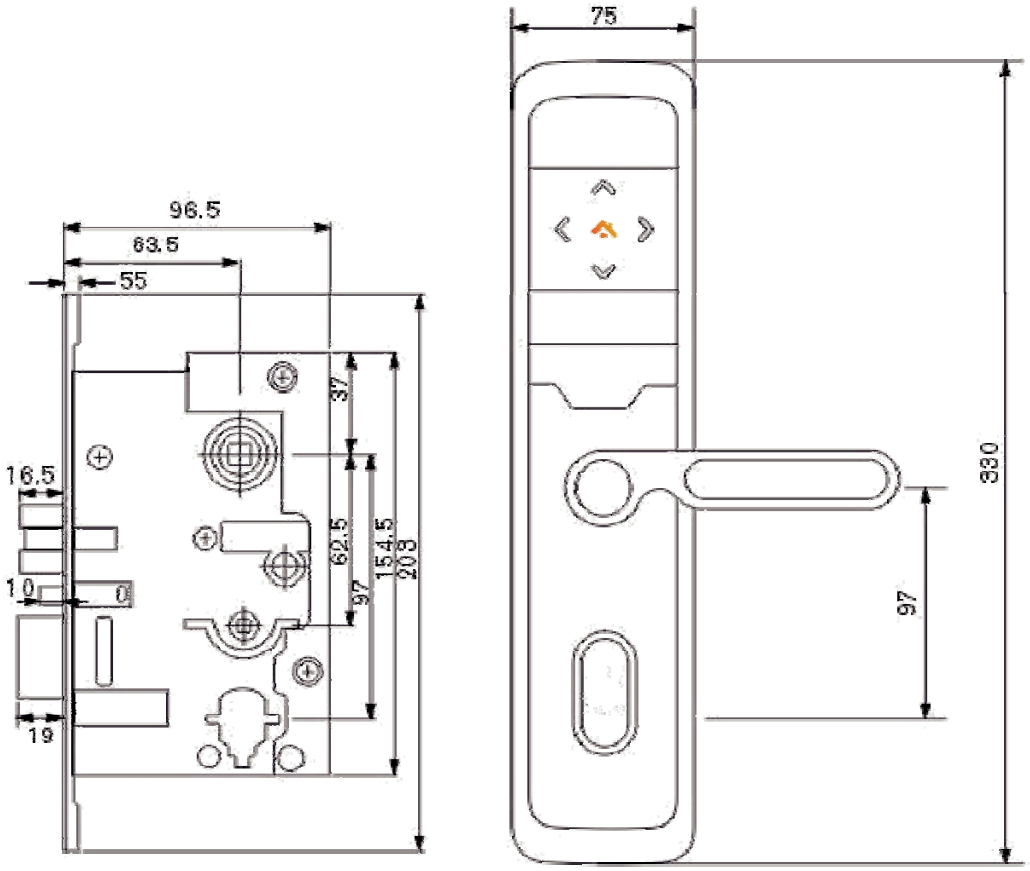

FCC Statement

Changes or modifications not expressly approved by the party responsible for compliance could void the user's authority to operate the equipment.

This equipment has been tested and found to comply with the limits for a Class B digital device, pursuant to Part 15 of the FCC Rules. These limits are designed to provide reasonable protection against harmful interference in a residential installation. This equipment generates uses and can radiate radio frequency energy and, if not installed and used in accordance with the

instructions, may cause harmful interference to radio communications. However, there is no guarantee that interference will not occur in a particular installation. If this equipment does cause harmful interference to radio or television reception, which can be determined by turning the equipment off and on, the user is encouraged to try to correct the interference by one or more of the following measures:

-- Reorient or relocate the receiving antenna.

-- Increase the separation between the equipment and receiver.

-- Connect the equipment into an outlet on a circuit different from that to which the receiver is connected.

-- Consult the dealer or an experienced radio/TV technician for help

This device complies with part 15 of the FCC rules. Operation is subject to the following two conditions (1)this device may not cause harmful interference, and (2) this device must accept any interference received, including interference that may cause undesired operation.

Product Parameter

Serialnumber	ITEMS	technical parameter
1	quiescent current	<50uA
2	dynamic current	<200mA
3	Battery life	>8000 times
4	working voltage	4.2-6V
5	power supply mode	4 section 5# alkaline battery
6	emergency service	5V
7	recognition speed	<1S
8	Low pressure hints	4.8V
9	navar	32—Bit RISC CPU
10	Fingerprint capacity	3 fingerprint +196 fingerprints
11	code capacity	200
12	Open door record	0-600
13	FAR	<0.001%
14	FRR	<1%
15	Finger use angle	tour

Function and operation

1. after waking up, press the lock to set the key (Voice Prompt : Please input user information) , If there is administrator information in the lock, the administrator validates the administrator (Voice Prompt:Please verify the administrator information) The user interface can be added to the right rear. Then press "settings key" to exit the setting (Voice Prompt:Exit settings) 。
2. Long press "set key" to restore the factory setting (Voice Prompt:Initialized successfully)
3. According to the "#" button to mute mode is open (Voice Prompt:Silent mode is turned on) According to the "#" button to mute mode has been closed (Voice Prompt : Silent mode is off)
4. APP operation

Factory Settings

Initial fingerprint	empty
language	English
Initial open door password	123456
Initialadministratorpassword	123456

After the door lock is installed and debugged, you will immediately restore the factory setting and change the password of the administrator in case of a security risk.

User rights and instructions

project	quantiy	ID number	authority
supervisor password	4	000-003	Login menu to complete the door lock settings
USER PASSWORD	196	004-199	push plate
Administrator fingerprint	3	001-003	Open the door, login menu to complete the door lock settings
User fingerprint	196	004-199	push plate

A. can set 200 sets of users for each set of locks, of which the first 3 are administrator users and the other 197 are ordinary users.

B. The administrator's password is composed of 6 digit numbers or fingerprints.

Introduction of keyboard function

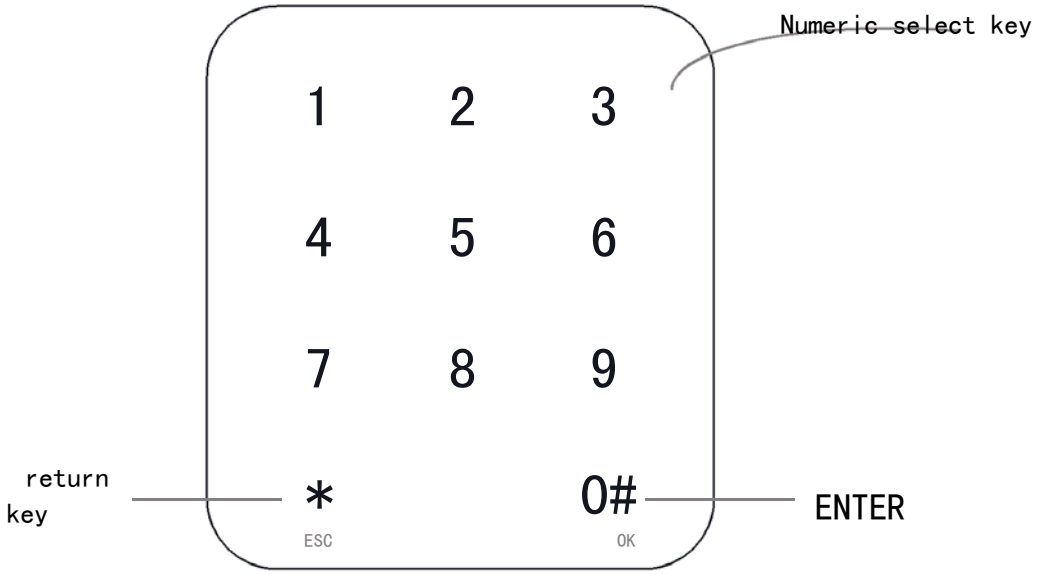

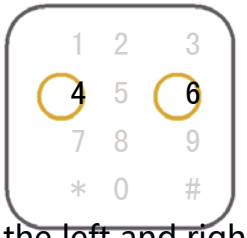

the left and right selection keys

delete or return

(# key confirmation)

(# key) silent mode

(multi touch) silent wake-up

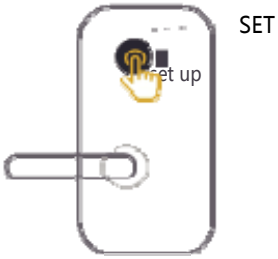

Set the key (by the rear lock surface)

SHENZHEN SHU ZI TECHNOLOGY CO., LTD.