NEXTBASE
Dash Cams

Instruction Manual

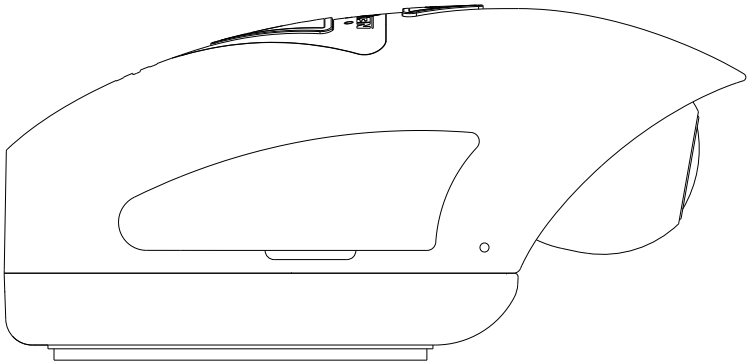

380GW | **Dash Cam**

1080p HD Dash Cam with GPS and Wi-Fi

TABLE OF CONTENTS

TABLE OF CONTENTS 02

INTRODUCTION TO USING A DASH CAM 03

USING CCTV IN A COMMERCIAL ENVIRONMENT 04

PRECAUTIONS 06

CAUTIONS ON USING THIS PRODUCT 06

FCC STATEMENT 07

PRODUCT SPECIFICATION 10

PACKAGE CONTENTS 11

PRODUCT FEATURES 11

POWERED GPS MOUNT 12

CAMERA - PARTS & CONTROLS 13

IN VEHICLE INSTALLATION 20

ANTI-TAMPER SECURITY INSTALLATION 30

CAM VIEWER APP

- INTRODUCTION 32
- CONNECT YOUR DEVICE 33
- MAIN SCREEN 34
- DOWNLOADING RECORDINGS 35
- SHARING RECORDINGS 37

DASH CAM SETTINGS 38

PC CONNECTION 45

TROUBLE SHOOTING 46

INTRODUCTION TO USING A DASH CAM

The Nextbase range of Dash Cams have been designed specifically with ease of use in mind, it is recommended NOT to change the default settings, which have been carefully selected to give the best performance for day to day use.

Basic operation.
The Dash Cam is set to record video, in files 1 minute in length. This means that each video file is a manageable size should you need to download and send to your insurance company. Eventually your MicroSD card will fill up with video files but don't worry, the camera automatically deletes the oldest file to make space for new recordings. This way you never run out of space and have plenty of driving historical evidence saved.

Typically a 16Gb card will store the last 2 hours of driving footage.

The Time and Date are automatically set upon the camera from satellite data. They will also update automatically for Daylight Savings Time, again based on the Country selected.

Automatic Start / Stop Technology.
The Dash Cam senses power supplied to the cigarette lighter socket as soon as the vehicle ignition is turned on and will start to record automatically.
When the ignition is turned off, the Dash Cam will perform an automatic shutdown process.

1. Tips for capturing best video footage:

1.1 Position the Dash Cam in the centre of the windscreen and ideally behind the rear view mirror so it is not an obstruction to the driver's field of view

1.2 Reduce the amount of sky in the picture, by angling the view of the camera towards the road. Too much sky will make the road appear darker due to the automatic exposure compensation.

1.3 Remove unnecessary items from your dashboard. If objects are placed on your dashboard these can cause reflections to be seen on the windscreen and these reflections may be captured during recording.

2. Tips for stable memory card performance:

2.1 Periodically format the memory card. Every 2-3 weeks we recommend that you reformat the memory card. This will wipe any files from the card and set it up afresh for continued use with your Dash Cam.
Of course, you should only do this AFTER you've downloaded any files from the card that you may want to keep, as formatting the card will remove all content.

2.1 Format your memory card using the Dash Cam, this will make sure that the card is structured specifically for your camera.

2.2 Switch off the Dash Cam before removing or inserting the SD memory card, to prevent the chance of damage being caused to the memory card or the files stored upon it.

USING CCTV IN A COMMERCIAL ENVIRONMENT

When using the NEXTBASE 380GW in a commercial vehicle you must ensure that you comply with any applicable legislation set out by the Government in your location. The following guide is written for usage of the product in the UK.

UK requirements include but are not limited to the Data Protection Act, the CCTV Code of Practice and the Surveillance Camera Code of Practice.

A simple CCTV Compliance Checklist is included upon the Software Disk included with the NEXTBASE 380GW. Additional supporting documents are also included to help Data Controllers comply with applicable legislation. Example Policy and Procedure documents are also supplied (in editable Word document format) so that you can amend them to suit your business.

CCTV Compliance Checklist Steps

1. The CCTV Code of Practice states that there should be a pressing need for a camera to be installed in your vehicle as using cameras can be privacy intrusive. You should ensure that you have identified a clear need for a camera to be installed (e.g. For the purpose of driver and passenger safety)

2. You must have a designated Data Controller who will be responsible for ensuring data is recorded correctly and securely as well as ensuring all Operators are aware of all relevant policies and procedures regarding the use of Dash Cams. The Data Controller must register with the Information Commission's Office (ICO). This can be done by visiting www.ico.org.uk.

   Data controllers will usually be organisations, but can be individuals, for example self-employed consultants. Even if an individual is given responsibility for data protection in an organisation, they will be acting on behalf of the organisation, which will be the data controller.

3. The CCTV Code of practice states that you must let people know when they are in an area where a surveillance system is in operation.

   Supplied with your product are three 'CCTV Window Stickers' (shown below) for this purpose.

CCTV images are being recorded in this vehicle
for the purpose of driver and passenger safety

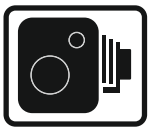

This CCTV scheme is controlled by:

For further information contact:

To comply with Surveillance Camera Legislation, the above window stickers should be located on all entrance points to your vehicle.

Continued on next page.

USING CCTV IN A COMMERCIAL ENVIRONMENT (CONTD.)

4. Using a suitable permanent marker pen please add contact details for CCTV / Data controller, before applying stickers to your vehicles windows

5. The Data Controller is responsible for ensuring that all Dash Cam operators/drivers are aware of their responsibilities regarding the data being recorded. Included in the "NEXTBASE Policy and Procedure Examples" Folder on the Software Disk is an Operator/Driver Briefing Checklist, to help the Data Controller monitor this.

6. The company should have clear, documented policies regarding all aspects of data being recorded and stored. These are covered individually later in the checklist.
   An example of a CCTV Recording Policy is included in the "NEXTBASE Policy and Procedure Examples" Folder on the Software Disk.

7. All Operators/Drivers should know where to find company policies and procedures for using the Dash Cam. This is covered in the Operator/Driver Briefing Checklist.

8. The Data Controller must state how long data is to be stored by the company.
   The CCTV Code of Practice states that data should be deleted once it is no longer needed.
   An example of a CCTV Data Storage Policy is included in the "NEXTBASE Policy and Procedure Examples" Folder on the Software Disk.

9. The Data Controller should specify how data is deleted once it is no longer needed. This is also covered in the CCTV Data Storage Policy example, on the Software Disk.

10. The Data Controller should decide who has access to stored data. This is also covered in the CCTV Data Storage Policy example on the Software Disk.

11. The Data Controller should decide how the company handles a request for access to data it has stored. An example of a CCTV Request for Access Policy is included in the "NEXTBASE Policy and Procedure Examples" Folder on the Software Disk.

Requests for Access can be made by members of the public or from Police forces.

Examples of both Public and Police request forms have been included in the "NEXTBASE Policy and Procedure Examples" Folder on the Software Disk.

CCTV Compliance Checklist and Example Documents produced using information provided by The Home Office, Information Commissioner's Office and the Surveillance Camera Commissioner. Contains public sector information licensed under the Open Government Licence v3.0.

PRECAUTIONS

Please read this manual carefully before operation and keep it for future reference. It will be helpful should you encounter any operational problem.

WARNING: Do not expose this product to rain, moisture or water under any circumstances, doing so may result in the risk of electric shock or fire.

CAUTION: To reduce the risk of electric shock, do not perform any servicing other than that contained in the instruction manual unless you are qualified to do so.
Have the unit serviced by a qualified service technician if;
The Unit has been exposed to rain or water.
The unit does not seem to operate normally.
The unit exhibits a marked change in performance.

CHOKING HAZARD: Some Products may contain components that are small enough to be swallowed. Please keep out of reach of children.

WEEE: **Disposal of Waste Electrical and Electronic Equipment and/or Battery by users in private households in the European Union.**

This symbol on the product or on the packaging indicates that this cannot be disposed of as household waste. You must dispose of your waste equipment and/or battery by handing it over to the applicable take-back scheme for the recycling of electronic equipment and/or batteries. For more information please contact your local household waste disposal office.

CAUTIONS ON USING THIS PRODUCT

1. Ensure that the windscreen is free of dirt or grease before placing mount upon it.
2. Do not obscure the view of the road ahead or impede the deployment of any airbags in the event of an accident.
3. When not in use, please disconnect the car adaptor from both the 12/24Vdc outlet in your vehicle.
4. Only clean the device with a soft dry cloth, for tough dirt, apply some neutral detergent diluted in 5 to 6 parts water to a soft cloth.
   Note that alcohol, thinner, benzene etc could cause damage to the paint or coatings.
5. Avoid making contact with the lens as damage may be caused.
6. If required clean the glass lens carefully using spectacle lens cleaning fluid on a soft cloth only.
7. The video recordings made by this Dash Cam are intended for personal use only.
8. Publication of the recordings on Youtube, the internet or other methods are subject to the Data Protection Act and the requirements thereof must be adhered to.
   If the Dash Cam is to be used within a commercial environment, i.e. truck use, then the CCTV regulation apply also, in addition to the Data Protection Act regulations. This includes labelling to identify the use of CCTV is taking place, the omission of Audio recording and informing the relevant authorities of who controls the data.
9. Whilst driving, do not adjust the controls of your device as this is a distraction to driving.

FCC STATEMENT

This device complies with Part 15 of the FCC Rules. Operation is subject to the following two conditions: (1) this device may not cause harmful interference, and (2) this device must accept any interference received, including interference that may cause undesired operation.

This equipment has been tested and found to comply with the limits for a Class B digital device, pursuant to Part 15 of the FCC Rules. These limits are designed to provide reasonable protection against harmful interference in a residential installation. This equipment generates, uses and can radiate radio frequency energy and, if not installed and used in accordance with the instructions, may cause harmful interference to radio communications. However, there is no guarantee that interference will not occur in a particular installation. If this equipment does cause harmful interference to radio or television reception, which can be determined by turning the equipment off and on, the user is encouraged to try to correct the interference by one or more of the following measures:

- Reorient or relocate the receiving antenna.
- Increase the separation between the equipment and receiver.
- Connect the equipment to an outlet on a circuit different from that to which the receiver is connected.
- Consult the dealer or an experienced radio/TV technician for help.
- This appliance and its antenna must not be co-located or operated conjunction with any other antenna or transmitter.
- A minimum separation distance of 20cm must be maintained between the antenna and the person for this appliance to satisfy the RF exposure requirements.

FCC CAUTION:
Any changes or modifications to the equipment not expressly approved by the party responsible for compliance could void your authority to operate the equipment.

FCC - SUPPLIER'S DECLARATION OF CONFORMITY STATEMENT

SUPPLIER'S DECLARATION OF CONFORMITY

(47 CFR Section 2.906).

We; Tank Design

Hereby, Declare that the essential requirements set out in the 47 CFR Sections 2.906 of FCC, have been fully fulfilled on our product with indication below:

1. Applicant's Info

Company Name: Portable Multimedia Ltd

Mailing Address: Unit 2, Caerphilly Business Park, Van Road, Caerphilly. CF83 3ED. UK

Contact: Graham Lambert

Tel: +44 02920 866429

Email Address: Support@nextbase.co.uk

2. Product Info

Product Name: Dash Cam

Model No.: NBDVR380GW

Brand Name: Nextbase

3. Applied Standard

Standards

E-CFR Title 47 Part 15 Subpart B—Unintentional Radiators: 2017

Report No. TBC

4. Test Firm Used to Take Measurements:

Name: Waltek Services (Shenzhen) Co., Ltd.

Address: 1/F, Fukangtai Building, West Baima Rd Songgang Street, Baoan District, Shenzhen, Guangdong, People's Republic of China, 518105

Contact Name: Philo Zhong

Tel: +86 755 8355 1033 802

Email: CB@waltek.com.cn

Designation No.: CN1201

FRN: 0027148261

FCC STATEMENT

SUPPLIER'S DECLARATION OF CONFORMITY CONTINUED

5. FCC Marking

6. Responsibilities and obligations

Strictly follow the FCC rules of 2.906, 2.908, 2.909.

7. Applicant's Authorization

Company Name: Portable Multimedia Ltd

Mailing Address: Unit 2, Caerphilly Business Park, Van Road, Caerphilly. CF83 3ED. UK

Contact Person: Graham Lambert

Signature:

Email Address: Support@nextbase.co.uk

Tel: +44 02920 866429

Date: TBC

8. Responsible party in US.

Company Name: Tank Design

Mailing Address: 158 Sidney Street, Cambridge, MA 02139, United States

Contact Person: Mr Scott Watts

Signature:

Email Address: SWatts@tankdesign.com

Tel: (617) 388-8380

Date: TBC

PRODUCT SPECIFICATION

Model Number	NBDVR380GW
Power Requirements	5V / 1.5A
Power Supply	12-24Vdc Car Power Cable (supplied) Fuse Type: 20mm / 1.5A Output: 5Vdc
Sensor Resolution	2.12M Pixel
Lens - Type / Angle / Aperture	6G / 140° / F1.8
Recording Resolution	1920 x 1080 @ 30fps
Card Reader	8 - 128GB MicroSD Card
SD Card (Recommended Type)	8 - 128GB MicroSD Card, Class 10 (48MB/s minimum), for best results use a recognized brand
SD Card Recorded file Capacity (based on default settings)	8GB MicroSD = 60 minutes of recording 16GB MicroSD = 120 minutes of recording 32GB MicroSD = 240 minutes of recording 64GB MicroSD = 480 minutes of recording 128GB MicroSD = 960 minutes of recording
Recording Format	.MOV
Unit Dimensions (inc. mount)	W58mm * L98mm * H47mm
Unit Weight (inc. mount)	125g
Cam Viewer (min req.)	
Android	V5.1
iOS	10.3
Replay 3 (min req.)	
Windows	Windows7
Mac	10.7

Android is a trademark of Google Inc. in the United States and other countries.
Mac is a registered trademarks of Apple Inc. in the United States and other countries.
iOS is a trademark or registered trademark of Cisco in the United States and other countries.
© 2015 Google Inc. All rights reserved. Google Maps™ mapping service is a trademark of Google Inc.
Windows is a registered trademark of Microsoft Corporation in the United States and other countries.
NEXTBASE Replay 3 is a registered trademark of Portable Multimedia LTD in the United Kingdom.
NEXTBASE Cam Viewer is a registered trademark of Portable Multimedia LTD in the United Kingdom.
microSD™ and the microSD logo are trademarks of SD-3C, LLC.
Wi-Fi® is a registered mark of Wi-Fi Alliance Corporation.
Other trademarks and trade names are those of their respective owners.

PACKAGE CONTENTS

Please check the contents of your NEXTBASE product.

Dash Cam & GPS Mount 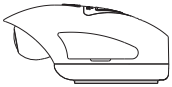	**Car Power Cable** 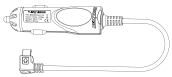	**USB Cable** 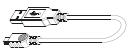	**Security Pack**
Window Sticker	**CCTV Window Sticker (3pcs)**	**Quick Start Guide** 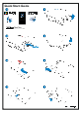	**Manual, CCTV Pack & Software Disk**

Product appearance may differ slightly to that shown above.

PRODUCT FEATURES

Thank you for purchasing this NEXTBASE Dash Cam, in this section we will outline some of the features available with this Dash Cam.

Designed in the UK the 380GW is discreet and fits neatly at the top of the windscreen to record the road ahead in FULL 1080p HD to ensure that you capture every detail such as road signs and number plates. The Nextbase 380GW Dash Cam has been made specifically for the commercial and fleet market, protecting both business and your drivers.

By having a unique lens with 90 degree vertical adjustment the Nextbase 380GW is the only Dash Cam really suited to commercial cars, vans and trucks with flat windscreens.

With any Dash Cam a key concern of any fleet manager is making sure that the device is running at all times. On the side of the Nextbase 380GW are special security covers, protecting the user controls to make sure the device is working.
The SD card, power connector and On/Off button can all be locked away with security to ensure that the camera is running at all times and there is no chance of the SD card being tampered with.

1. Corporate responsibility – protect your employees and drivers on the road.
2. Prove that your driver wasn't to blame in the event of an incident.
3. In the event of an accident – Dash Cam footage can significantly reduce insurance claim time to get your fleet vehicles back on the road sooner.
4. Protect your brand reputation – by having a Dash Cam Drivers tend to be more cautious, on average 33% safer than without a Dash Cam*

*telematics scores with and without Dash Cam fitted

For Help and Support please call 02920 866 429

POWERED GPS MOUNT

Please see below to identify the parts of the supplied powered GPS mount.

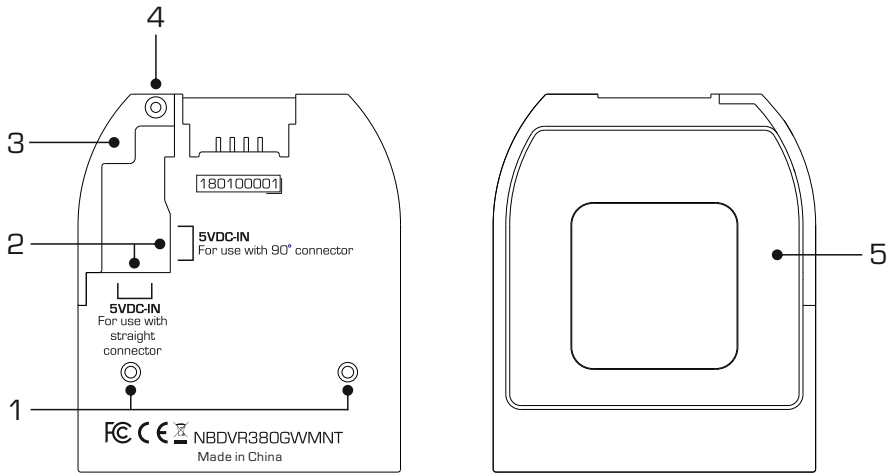

1. **Locking pins**
   These pins will locate and then allow the camera to be attached to the mount.

2. **DC-IN sockets**
   There are two sockets available, one for use with the supplied 90° car adaptor, the other for use with the Nextbase Hardwire Kit (sold separately) which uses a straight connector.

   Please contact your Nextbase retailer to purchase the Nextbase Hardwire Kit.

3. **Cable lock**
   The cable lock secures the car adaptor or hardwire kit cable to the mount.

4. **Cable lock anti-tamper screw**
   Location of the anti-tamper screw, that can be used to secure the cable lock to the mount.

5. **Adhesive pad**
   Once the backing tape has been removed this adhesive pad will securely adhere the mount to your windscreen.

   Note:
   - Before removing the red backing tape from the adhesive pad make sure you have determined the optimum position for the Dash Cam (see page 27) and that the windscreen is free of dust and/or dirt.
   - A spare adhesive pad has been provided, in case you wish to change the mounts location.

CAMERA - PARTS & CONTROLS

Please see below to identify the parts and controls of your Dash Cam.

Left side:

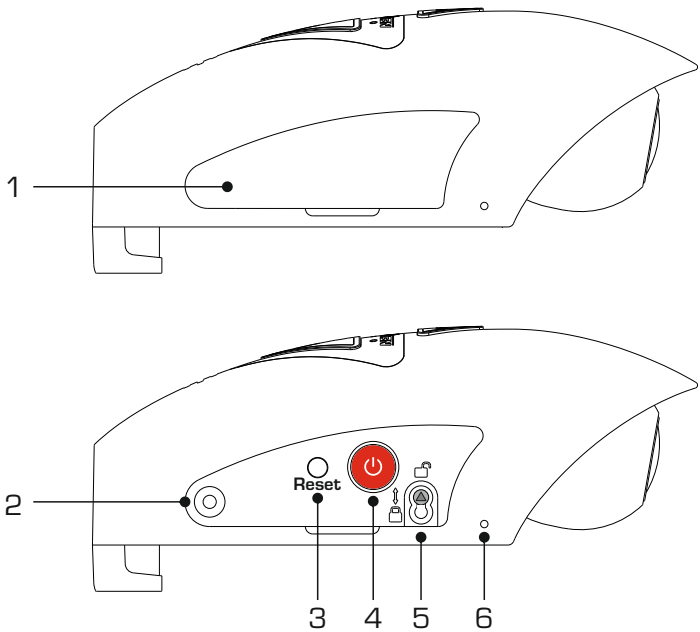

1. **Side cover**
   There are two types of side cover supplied:

   Standard covers:
   These are fitted when the Dash Cam as standard and are used during normal operation. Remember to replace the side cover before use.

   Locking covers:
   Included within the Security Pack are two locking covers, these can be secured to the Dash Cam using the supplied anti-tamper screws. This allows the owner of the vehicle to prevent un-authorised access to or operation of the Dash Cam.

2. **Anti-tamper screw insert**
   Insert thread for the anti-tamper screw.

3. **Reset button**
   In the unlikely event the Dash Cam becomes unresponsive, press the RESET button to restart the Dash Cam.

CAMERA - PARTS & CONTROLS (CONTD.)

Left side continued:

4. **Power & Start / Stop recording button**
   Long press (2 seconds) power On/Off the Dash Cam.
   Short press to start / stop recording.

5. **Camera to Mount locking screw**
   The camera can be secured to the mount to prevent un-authorised removal, see pages 30 - 31 for further details.

6. **Microphone**
   Integral microphone for audio recording, this can be turned off via the Cam Viewer App.

CAMERA - PARTS & CONTROLS (CONTD.)

Please see below to identify the parts and controls of your Dash Cam.

Right side:

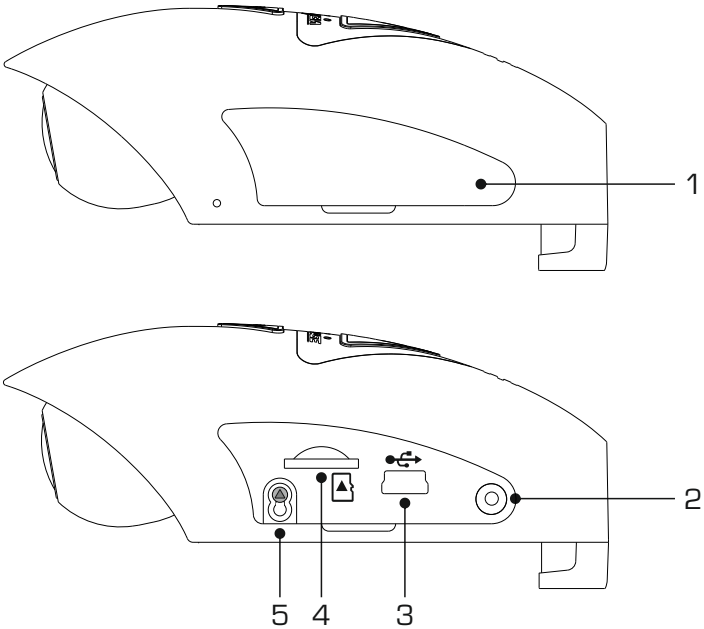

1. **Side cover**
   Removable side cover, remember to replace the side cover before use.

2. **Anti-tamper screw insert**
   Insert thread for the anti-tamper screw.

3. **USB socket**
   Connect the supplied USB data cable here to connect the Dash Cam to a computer.

   Note:
   - Normally the car power cable is connected to the mount when in use, not directly to this socket.

4. **SD card slot**
   Insert the MicroSD card here, taking care that the gold contacts are facing towards the mount.

5. **Camera to Mount locking screw**
   The camera can be secured to the mount to prevent un-authorised removal, see pages 30 - 31 for further details.

CAMERA - PARTS & CONTROLS (CONTD.)

Top:

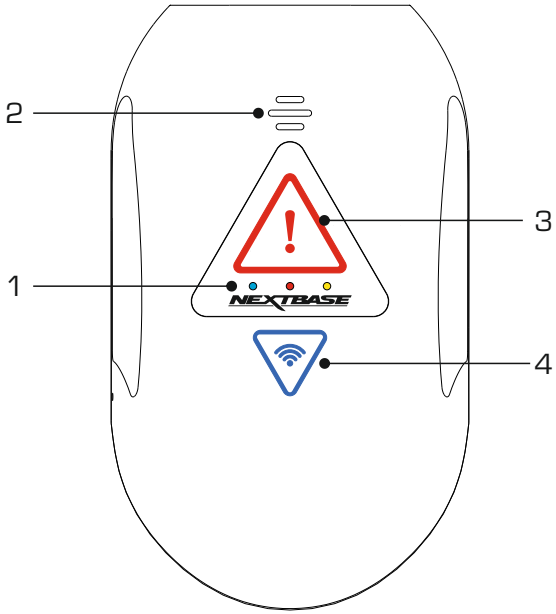

1. LED indicators

The functions of the three LED indicators are described in the below table.

LED Colour	Function	Slow Flash	Fast Flash	Solid
Blue	Battery	-	Low Battery Warning	Battery Charging
Red	Power	Recording	Updating FW	Power On
Yellow	GPS	Searching for GPS Lock	Formatting SD Card	GPS Locked

Note:

- The blue LED will only function when there is a NEXTBASE 380 Battery Pack installed, this is sold separately.
  Please contact your NEXTBASE retailer to purchase the NBDVR380BAT.

- This Dash Cam uses Negative Temperature Coefficient (NTC) technology to protect the battery. This will shut down battery charging should the Dash Cam's internal temperature exceed 70degrees.

CAMERA - PARTS & CONTROLS (CONTD.)

2. Speaker

Used for the two types of 'notification' sounds.

Sounds:
There are two sounds, these are used to identify when recording starts and stops.

1. Start recording
   A three-tone beep sound (ascending) will be heard when recording starts.

2. Stop recording
   A three-tone beep sound (descending) will be heard when recording stops.

Announcements:
There are two spoken announcements, these are used to identify there is a SD card issue that needs attention before recording can start.

i. Please insert Class 10 SD card
   This is heard when there is either no SD card inserted, the inserted SD card is not of the Class 10 type or the SD card is defective and cannot be successfully formatted.

ii. Card error, format SD card
   The inserted card has previously been formatted to an incompatible standard for use with the Dash Cam, this is usually resolved by simply re-formatting the SD card within the Dash Cam.

   See page 43 for details on how format the SD card.

   Note:
   - Should formatting the SD card not resolve the issue, please try another quality branded SD card, making sure that is a Class 10 (48MB/s minimum) type.
   - The Sounds and Announcements can be turned On / Off from the Cam Viewer APP as required.

CAMERA - PARTS & CONTROLS (CONTD.)

3. Protect button & indicator

Press the protect button whilst recording to protect the current file, the button will illuminate, red in colour indicating the file is protected.

Depending on at which point during the current recording the file is protected, the camera will also save the previous or subsequent recordings, as follows:-

If the protection takes place during the first 3rd of the recording, the previous recording will also be protected.

If the protection takes place during the final 3rd of a recording, the next recording will also be protected.

Note:
- The protect button is also used when connecting the camera to a computer using the USB cable. Press and hold the protect button when connecting the camera to a computer and the Dash Cam will power on in Update Mode.

4. Wi-Fi button & indicator

Press and hold the Wi-Fi button for 2 seconds to turn on the Dash Cam's Wi-Fi function. Once turned on, the button will flash slowly blue in colour, awaiting a connection from a smartphone / tablet etc.

Once a device has been successfully connected the button will become solid blue. If no connection is established within 2 minutes, then the Wi-Fi function turns off automatically and the blue flashing light will extinguish.

See pages 32 - 38 for details on how to connect your mobile device to the Dash Cam and how to use the Cam Viewer App.

Note:
- The Protect button can also be used to format the SD card, when recording is stopped. Press and hold the Protect button for 6 seconds, the yellow LED will flash quickly during the SD card formatting process.

CAMERA - PARTS & CONTROLS (CONTD.)

Bottom:

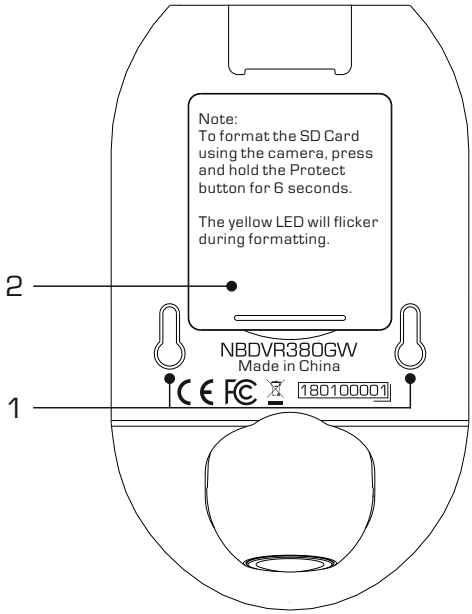

1. **Mount to camera fixing points**
   The mount locking pins locate here when attaching the camera to the mount.

2. **Battery compartment**
   For use with the battery pack (sold separately), required if using the Parking Mode function on a 'switched' live power source, i.e. a 12Vdc outlet that only provides power when the vehicles ignition is turned on.

   Please contact your Nextbase retailer to purchase the battery, part number NBDVR380BAT.

IN VEHICLE INSTALLATION

1. **Remove side cover**
   Using the finger nail slot, remove the right hand side cover, under which the SD card slot is located.

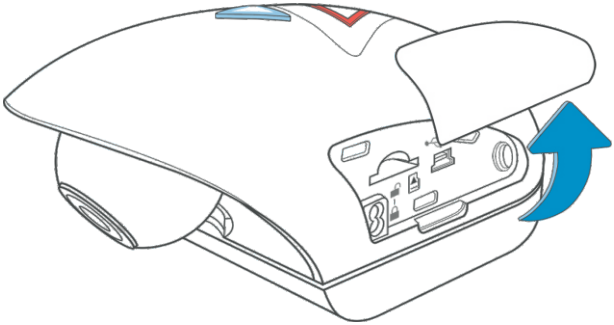
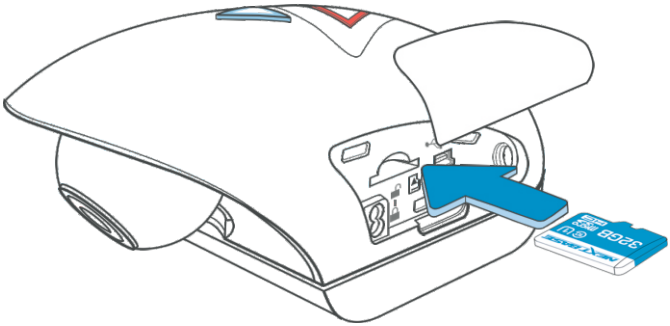
2. **Insert micro SD Card**
   Insert the MicroSD card here, taking care that the gold contacts are facing towards the bottom of the Dash Cam.