IN VEHICLE INSTALLATION (CONTD.)

7. Refit cable lock

The cable lock can now be refitted by firstly inserting the tang fully and then rotating the cable lock until it engages fully around the power cable and then clicks in to place in the mount.

The cable clamp can be secured to the mount to prevent un-authorised removal, see pages 30 - 31 for further details.

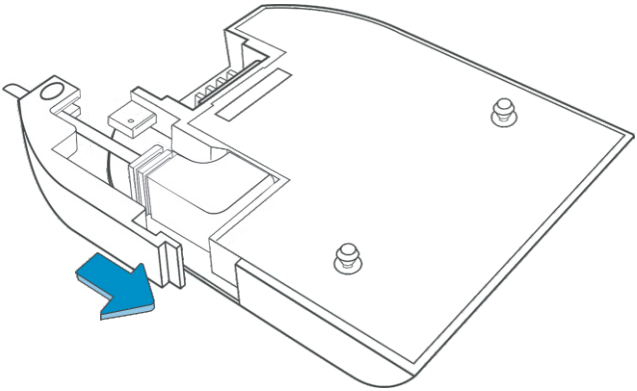

8. Refit camera to mount

Offer the mount to the camera to engage the locking pins and then slide the mount away from the camera lens to engage the mount connections fully.

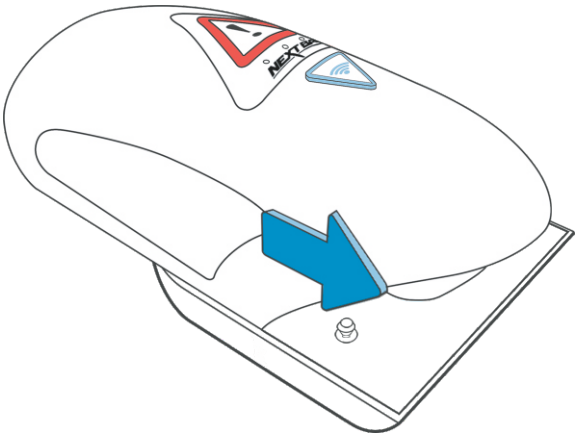

IN VEHICLE INSTALLATION (CONTD.)

9. Download and install the APP

Visit the appropriate APP store for your smartphone / tablet and download the Nextbase Cam Viewer APP.

Install the APP upon your device and then open the APP in readiness to connect to the Dash Cam.

10. Plug Cigarette Power cable in to the car power supply

Connect the Cigarette lighter plug to the vehicles 12Vdc or 24Vdc supply.

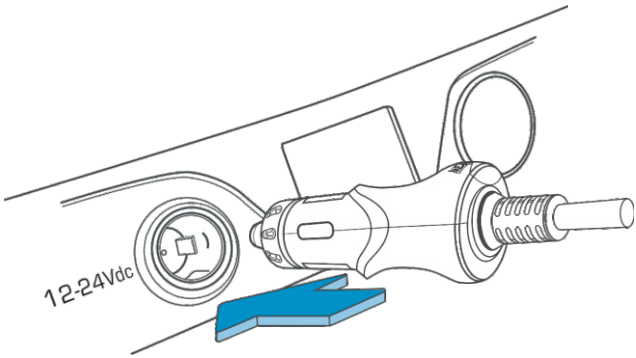

Continued on next page.

IN VEHICLE INSTALLATION (CONTD.)

Route the supplied car power cable (as shown) and connect it to the DC-IN socket of the mount.

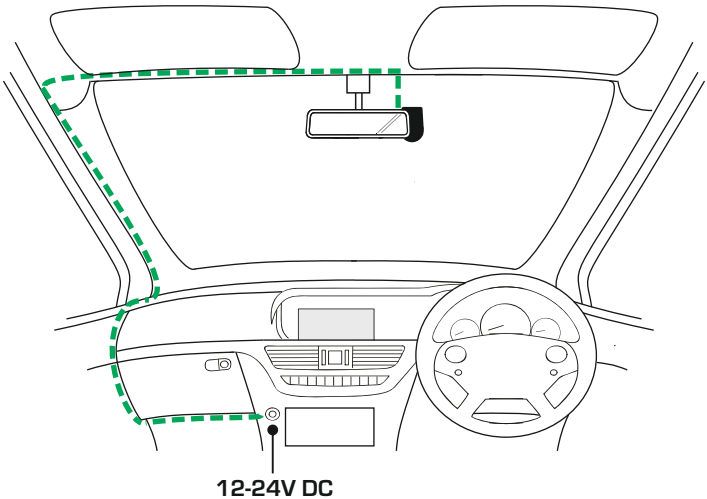

The above diagram is for illustration purposes only.

The Dash Cam will automatically power on and start recording once power is available. In some vehicles this will be when connections are made, for others the Dash Cam will power on once the ignition has been turned on.

If the vehicle in which the Dash Cam is installed has permanent live cigarette lighter sockets, the user can simply use the power button to switch the Dash Cam off when the vehicle stops. To take advantage of the Automatic Start / Stop Technology a Nextbase Hardwire Kit can be installed on a switched-live power supply.

The Nextbase Hardwire Kit includes the necessary 12-24Vdc to 5Vdc convertor and battery protection circuitry.

Should your vehicle not have a 12-24Vdc outlet, but does have a 5Vdc USB Outlet, this can be used instead. Connect the USB cable supplied with your Dash Cam in place of the car power cable.

You MUST however connect the USB cable to the mount, NOT directly to the Dash Cam USB socket.

Note:
- Do NOT wire the Dash Cam directly to a 12V supply by cutting the cigarette plug off the end of the cable, or damage will result.