# WIRELESS INPUT UNIT

**(Modbus-RTU Transparent 900MHz Band Wireless Device (Child device), Built-in I/O, 2-wire Transmitter Inputs 2 points)**

MODEL **WL40W1F-DS2**

## BEFORE USE ....

Thank you for choosing M-System. Before use, please check contents of the package you received as outlined below.
If you have any problems or questions with the product, please contact M-System's Sales Office or representatives.

### ■ PACKAGE INCLUDES:

Wireless input unit .....(1)
Antenna .....(1)

### ■ MODEL NO.

Confirm Model No. marking on the product to be exactly what you ordered.

### ■ INSTRUCTION MANUAL

This manual describes necessary points of caution when you use this product, including installation, connection, hardware setting, and basic maintenance procedures.
For information on the introduction of wireless device, refer to the 900MHz band wireless device operating manual (EM-9085).

## POINTS OF CAUTION

### ■ POWER INPUT RATING & OPERATIONAL RANGE

- Locate the power input rating marked on the product and confirm its operational range as indicated below:
  24 V DC rating: 24 V ±10%, ≤ 140 mA

### ■ GENERAL PRECAUTIONS

- Before you remove the unit or mount it, turn off the power supply for safety.

### ■ ENVIRONMENT

- Indoor use.
- When heavy dust or metal particles are present in the air, install the unit inside proper housing with sufficient ventilation.
- Do not install the unit where it is subjected to continuous vibration. Do not subject the unit to physical impact.
- Environmental temperature must be within -10 to +55°C (14 to 131°F) with relative humidity within 10 to 90% RH in order to ensure adequate life span and operation.
- Attach the antenna to the unit.
- Attachment and adjustment of sleeve antenna; Loosen the connector (See the top-right figure.), and rotate the antenna. Holding the antenna vertical, tighten the connector by hand.
- Make sure to fix the antenna firmly.

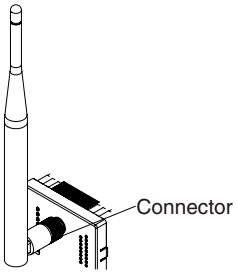


- Attachment of rooftop antenna; There is a magnet on the bottom face which allows you to attach the antenna on a metal box and such. To obtain optimum performance from the antenna, attach on a metal plate (recommended dimension: 500 mm × 500 mm or more). However, in the case of connecting FE1 to a metal plate, the isolation between FE1 and antenna connector will be lost. Tighten the connector with a specified torque (0.9 N·m). As a guide, finger-tighten it until the connector stops, and then rotate it 10 to 15 degrees with a wrench. Do not force the cable to bend less than acceptable radius of 3 cm.
- Using 7.5 m coaxial cable (model: CX-SAC0SAD0Q0750) (OKI) for extension decreases transmission distance.

### ■ WIRING

- Do not install cables close to noise sources (relay drive cable, high frequency line, etc.).
- Do not bind these cables together with those in which noises are present. Do not install them in the same duct.

### ■ AND ....

- The unit is designed to function as soon as power is supplied, however, a warm up for 10 minutes is required for satisfying complete performance described in the data sheet.

## CAUTION REGARDING RADIO FREQUENCY

### ■ FCC NOTICE

- This device complies with part 15 of the FCC Rules. Operation is subject to the following two conditions: (1) This device may not cause harmful interference, and (2) this device must accept any interference received, including interference that may cause undesired operation.

### ■ FCC CAUTION

- Changes or modifications not expressly approved by the party responsible for compliance could void the user's authority to operate the equipment.

M-SYSTEM CO., LTD.
5-2-55, Minamitsumori, Nishinari-ku, Osaka 557-0063 JAPAN
Phone: +81(6)6659-8201 Fax: +81(6)6659-8510 E-mail: info@m-system.co.jp

■ **NOTE**

- This equipment has been tested and found to comply with the limits for a Class A digital device, pursuant to part 15 of the FCC Rules. These limits are designed to provide reasonable protection against harmful interference when the equipment is operated in a commercial environment. This equipment generates, uses, and can radiate radio frequency energy and, if not installed and used in accordance with the instruction manual, may cause harmful interference to radio communications. Operation of this equipment in a residential area is likely to cause harmful interference in which case the user will be required to correct the interference at his own expense.
- This transmitter must not be co-located or operated in conjunction with any other antenna or transmitter.

■ **FCC RF EXPOSURE INFORMATION**

- This equipment complies with FCC radiation exposure limits set forth for an uncontrolled environment and meets the FCC radio frequency (RF) Exposure Guidelines. This equipment should be installed and operated keeping the radiator at least 20cm or more away from person's body.

  FCC ID : 2AOTF-0000004

  Contains FCC ID: 2AKGW-1TD3016A1

# COMPONENT IDENTIFICATION

■ **FRONT VIEW**

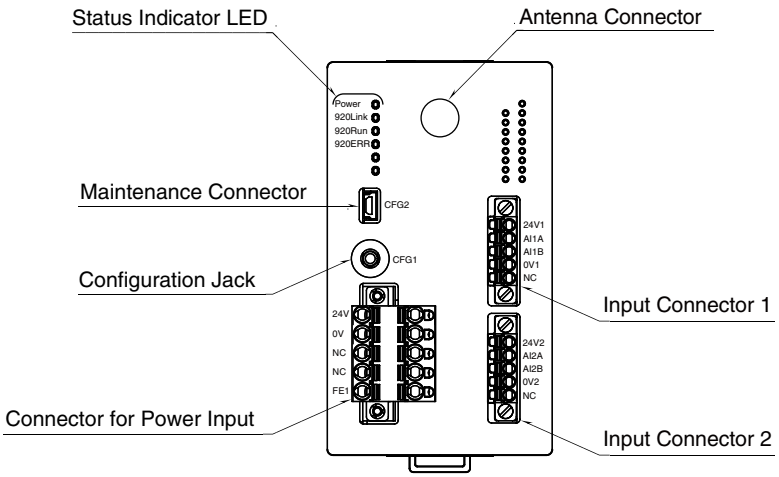


■ **STATUS INDICATOR LED**

| ID | STATUS | COLOR | FUNCTION |
|---|---|---|---|
| Power | ON | Green | Power is on. |
| 920Link | ON | Green | Wireless: coordinator is connected |
| | 0.5 Hz blinking | Green | Wireless: coordinator connection is in process |
| | Blinking twice per second | Green | Wireless: start-up error |
| 920Run | ON | Green | Wireless: normal communication |
| 920ERR | ON | Red | No detour |
| | Blinking | Red | Network authentication failure |

## ■ TERMINAL ASSIGNMENTS

### • Connector for power input

Unit side connector: MSTBV2,5/5-GF-5,08AU (Phoenix Contact)
Cable side connector: TFKC2,5/5-STF-5,08AU (Phoenix Contact)

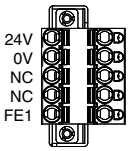


| ID | FUNCTION |
|---|---|
| 24V | Power input 24 V |
| 0V | Power input 0 V |
| NC | Not used |
| NC | Not used |
| FE1 | Power input earth |

### • Input connector 1

Unit side connector: MC1,5/5-GF-3,5 (Phoenix Contact)
Cable side connector: FMC1,5/5-STF-3,5 (Phoenix Contact)

| ID | FUNCTION |
|---|---|
| 24V1 | 2-wire transmitter 1 + |
| AI1A | 2-wire transmitter 1 – |
| AI1B | Current input 1 + |
| 0V1 | Current input 1 – |
| NC | Not used |

### • Input connector 2

Unit side connector: MC1,5/5-GF-3,5 (Phoenix Contact)
Cable side connector: FMC1,5/5-STF-3,5 (Phoenix Contact)

| ID | FUNCTION |
|---|---|
| 24V2 | 2-wire transmitter 2 + |
| AI2A | 2-wire transmitter 2 – |
| AI2B | Current input 2 + |
| 0V2 | Current input 2 – |
| NC | Not used |

# CONFIGURATOR SOFTWARE SETTING

With configurator software, settings shown below are available.
Refer to the users manual of W920FCFG for detailed operation.

## ■ WIRELESS SETTING

| ITEM | SETTING RANGE | DEFAULT |
|---|---|---|
| Preferred PAN ID (group number) | 0000 – FFFE (hexadecimal, 4 digits) | 0000 |
| Radio channel number | 1 – 43 (selectable up to 10 channels) | None |
| Short address | 0000 – FFFD (hexadecimal, 4 digits) | 0000 |
| Network name | English one-byte characters within 16 characters<br>(one-byte space, “-”, “_”, “.”, “@” are usable.) | Blank |
| Encryption key | 0000...0 – FFFF...F<br>(hexadecimal, 32 digits) | 0000...0 |
| Transmitter power output | 0.16mW / 1mW / 20mW | 20mW |
| Low-speed moving mode | No / Yes | No |
| Device type in a network,<br>Number of devices in a network | Child (fixed), 1 to 30 devices /<br>Child (fixed), 31 to 60 devices /<br>Child (fixed), 61 to 100 devices /<br>Child (fixed) + child (moving) | Child (fixed), 1 to 30 devices |
| Set network quality | Standard (recommended) /<br>Frequency of route switching and delay (higher) /<br>Frequency of route switching and delay (highest) | Standard (recommended) |
| Network join mode | V3-compatible mode / Fast join mode | V3-compatible mode |
| Fixed route | No / Yes | No |
| Destination short address | 0000 – FFFD (hexadecimal, 4 digits) | 0000 |
| Temporary detour | No / Yes | Yes |
| Packet filtering | None / Yes (polling type) | Yes (polling type) |
| Filter timeout on polling | 1.0 – 60.0 (sec.) | 1.0 (sec.) |
| 920Run timeout | 1.0 – 60.0 (sec.) | 3.0 (sec.) |
| Modbus node address | 1 – 247 | 1 |
| Retry times before route switching | Once / Twice / Three times | Three times |

* For version confirmation of communication module, refer to the users manual of W920FCFG.

## ■ INPUT SETTING

| CHANNEL | ITEM | SETTING RANGE | DEFAULT |
|---|---|---|---|
| Analog input 1 | Input enabled / disabled | Enabled / Disabled | Enabled |
| | Zero input value | 4.000 – 20.000 | 4.000 (mA) |
| | Full input value | 4.000 – 20.000<br>(full input value > zero input value) | 20.000 (mA) |
| | Fine zero adjustment | -5.00 – +5.00 (%) | 0.00 (%) |
| | Fine gain adjustment | 0.9500 – 1.0500 | 1.0000 |
| | Zero scaling value | -32000 – +32000 | 0 |
| | Full scaling value | -32000 – +32000 | 10000 |
| | First-order filter time constant | 0.0 – 60.0 (sec.) | 0.0 (sec.) |
| Analog input 2 | Input enabled / disabled | Enabled / Disabled | Enabled |
| | Zero input value | 4.000 – 20.000 | 4.000 (mA) |
| | Full input value | 4.000 – 20.000<br>(full input value > zero input value) | 20.000 (mA) |
| | Fine zero adjustment | -5.00 – +5.00 (%) | 0.00 (%) |
| | Fine gain adjustment | 0.9500 – 1.0500 | 1.0000 |
| | Zero scaling value | -32000 – +32000 | 0 |
| | Full scaling value | -32000 – +32000 | 10000 |
| | First-order filter time constant | 0.0 – 60.0 (sec.) | 0.0 (sec.) |

# INSTALLATION

## ■ DIN RAIL MOUNTING

A) Hang the upper hook at the back of the unit on the DIN rail.
B) Push the lower part of the unit to fit in the DIN rail.

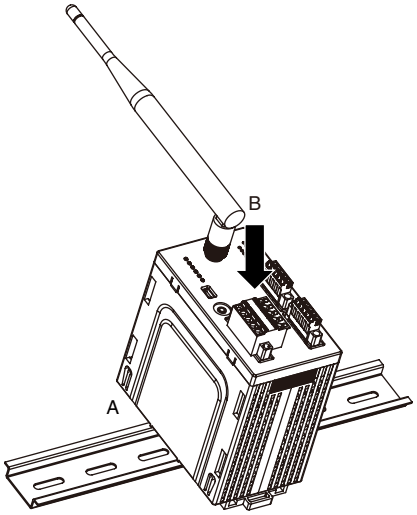


## ■ DEMOUNTING

A) Pull down the DIN rail adaptor using a minus screw-driver.
B) Pull out the lower part of the unit.
C) Remove the upper part from the DIN rail.

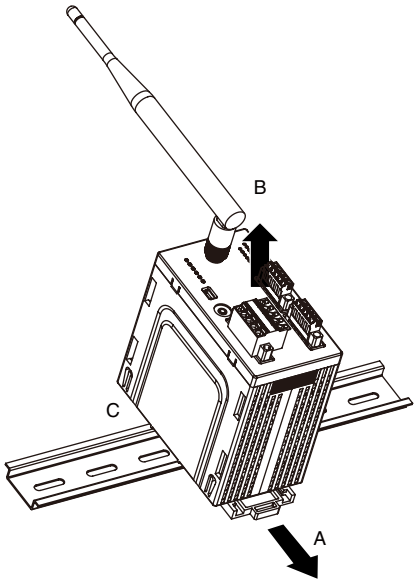

# TERMINAL CONNECTIONS

Connect the unit as in the diagram below.

## ■ EXTERNAL DIMENSIONS unit: mm (inch)

● **WITH SLEEVE ANTENNA**

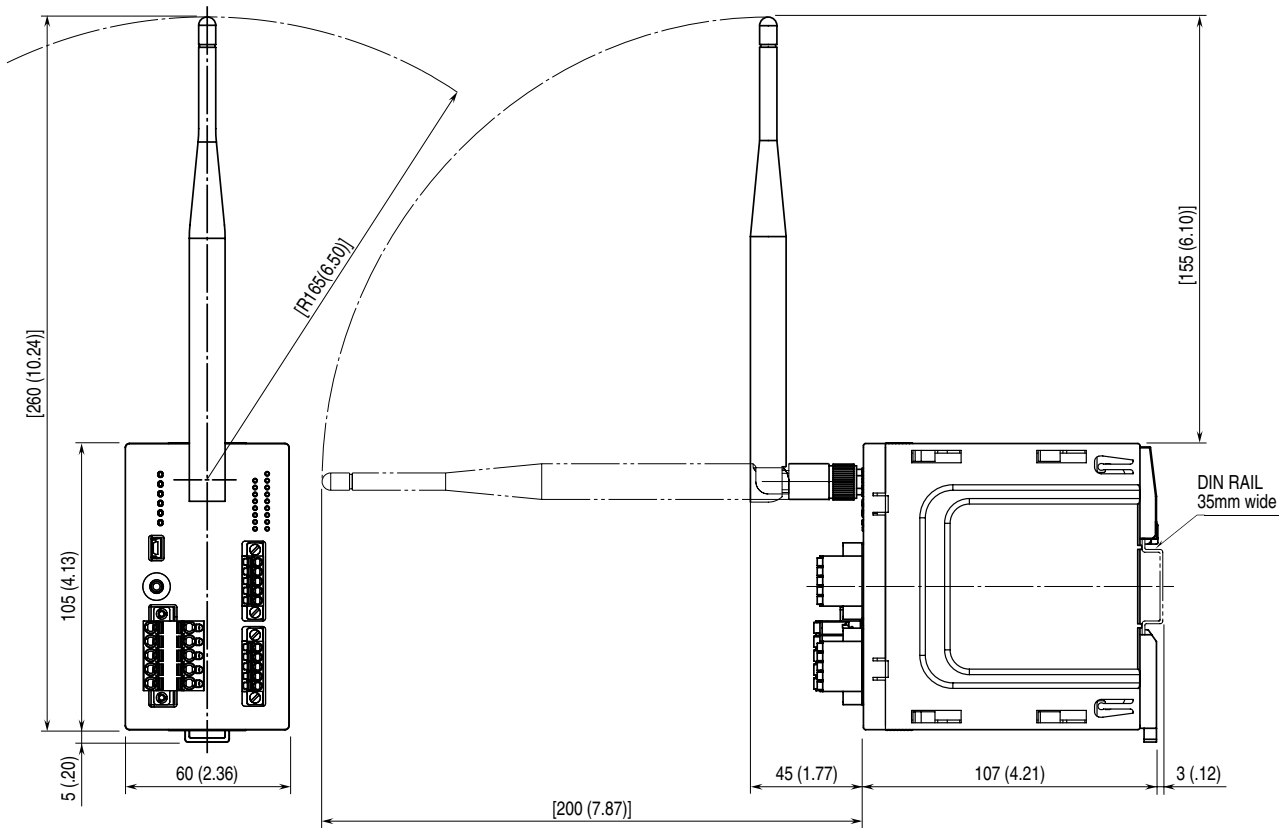


● **WITH ROOFTOP ANTENNA**

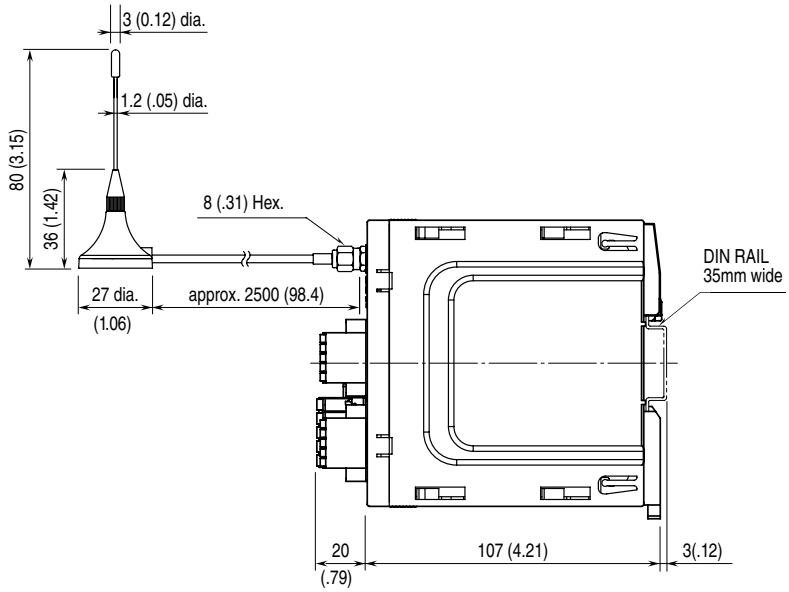

■ **CONNECTION DIAGRAM**

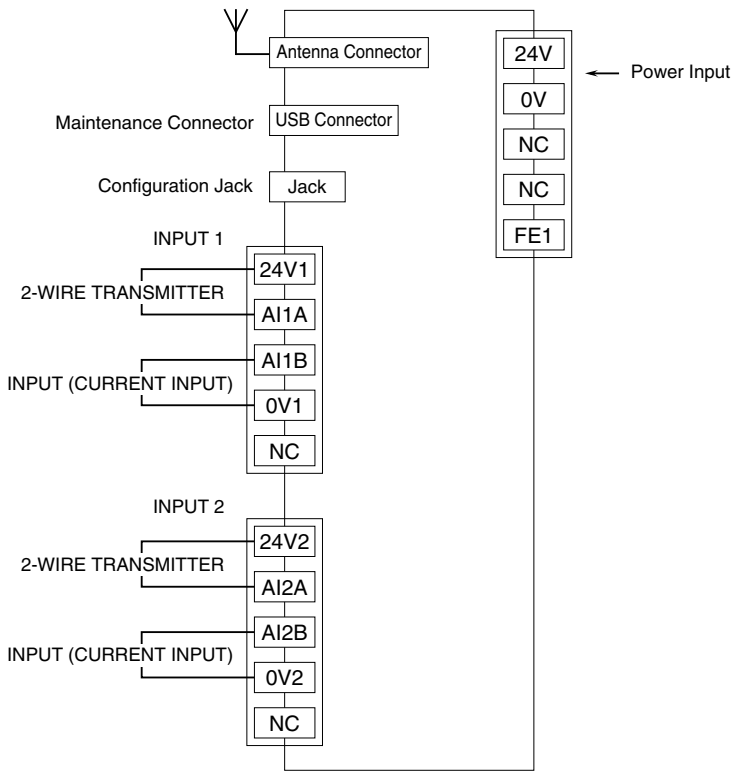


■ **HANDLING OF THE UNUSED INPUT**

Connect 5 kΩ (0.5 W) terminating resistor to the input terminal which is not used, as shown below.

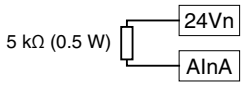


If the above step is not performed, input becomes -5% or less, and PLC and such show data error.
However, using PC configuration software (model: W920FCFG) enables the setting of the unused input without the above step.

# WIRING INSTRUCTIONS

■ **TENSION CLAMP (FRONT TWIN CONNECTION) FOR POWER INPUT**

**Applicable wire size**: 0.2 to 2.5 $mm^2$
**Stripped length**: 10 mm
**Recommended terminals**:
AI0,25-10YE 0.25 $mm^2$ (Phoenix Contact)
AI0,34-10TQ 0.34 $mm^2$ (Phoenix Contact)
AI0,5-10WH 0.5 $mm^2$ (Phoenix Contact)
AI0,75-10GY 0.75 $mm^2$ (Phoenix Contact)
AI1-10RD 1.0 $mm^2$ (Phoenix Contact)
AI1,5-10BK 1.5 $mm^2$ (Phoenix Contact)
AI2,5-10BU 2.5 $mm^2$ (Phoenix Contact)

■ **SEPARABLE TENSION CLAMP TERMINAL FOR INPUT**

**Applicable wire size**: 0.2 to 1.5 $mm^2$
**Stripped length**: 10 mm
**Recommended terminals**:
AI0,25-10YE 0.25 $mm^2$ (Phoenix Contact)
AI0,34-10TQ 0.34 $mm^2$ (Phoenix Contact)
AI0,5-10WH 0.5 $mm^2$ (Phoenix Contact)
AI0,75-10GY 0.75 $mm^2$ (Phoenix Contact)

# MODBUS FUNCTION CODE

Modbus function codes are shown below.

### ■ DATA AND CONTROL FUNCTION

| CODE | NAME | |
|---|---|---|
| 01 | Read Coil Status | Digital output from the slave (read / write) |
| 02 | Read Input Status | Status of digital inputs to the slave (read only) |
| 03 | Read Holding Registers | General purpose register within the slave (read / write) |
| 04 | Read Input Registers | Collected data from the field by the slave (read only) |
| 05 | Force Single Coil | Digital output from the slave (read / write) |
| 06 | Preset Single Registers | General purpose register within the slave (read / write) |
| 15 | Force Multiple Coils | Digital output from the slave (read / write) |
| 16 | Preset Multiple Registers | General purpose register within the slave (read / write) |

### ■ EXCEPTION CODE

| CODE | NAME | |
|---|---|---|
| 01 | Illegal Function | Function code is not allowable for the slave |
| 02 | Illegal Data Address | Address is not available within the slave |
| 03 | Illegal Data Value | Data is not valid for the function |
| 04 | Slave Device Failure | |
| 05 | Acknowledge | |
| 06 | Slave Device Busy | |
| 07 | Negative Acknowledge | |

# MODBUS I/O ASSIGNMENT

| | ADDRESS | DATA TYPE | DATA |
|---|---|---|---|
| Coil (0X) | 1 – 16 | | Reserved (unused) |
| Input (1X) | 1 – 8 | | Reserved (unused) |
| | 9 | | Analog input error (input range error of analog input 1) |
| | 10 | | Analog input error (input range error of analog input 2) |
| | 11 – 16 | | Reserved (unused) |
| Input Register (3X) | 1 | I | Analog Input (analog input 1) |
| | 2 | I | Analog Input (analog input 2) |
| | 3 – 16 | – | Reserved (unused) |
| Holding Register (4X) | 1 – 16 | – | Reserved (unused) |

Note: DO NOT access addresses other than mentioned above. Such access may cause problems such as inadequate operation.

### ■ DATA TYPE

I: Integer -32768 – +32767

### ■ STATUS

1 bit: indicates input status.
Input range error ( Input range is out of the range -5 to +105% for scaling setting, or out of the range -32768 to +32767 .)
0: Normal 1: Error

# INPUT DATA

## ■ ANALOG DATA (16 BITS)

| 15 | | | | | | | | | | | | | | | 0 |
|---|---|---|---|---|---|---|---|---|---|---|---|---|---|---|---|
| | | | | | | | | | | | | | | | |

When the scaling setting is initial value, the data is 0 to 10000 for input 0 to 100% setting.
If the input range is -5 to +105% (-500 to +10500) and that is out of range, the data is fixed to -500 or 10500.
Minus value is converted into negative values, represented in 2's complements.

## ■ DATA ERROR STATUS

Data error status is indicated by 1 bit.
0: OFF 1: ON

# LIGHTNING SURGE PROTECTION

M-System offers a series of lightning surge protector for protection against induced lightning surges. Please contact M-System to choose appropriate models.