Rear-Seat Entertainment System

© 2018, Mercedes-Benz Accessories GmbH, Stuttgart · A Daimler AG Company.
Reprinting, translating and reproduction, in whole or in part, are not permitted
without our prior written consent.

2018/03
03F005-17

Mercedes-Benz

Key to symbols

WARNING

A warning notice informs you of possible risks to your health or life.

Environmental note

Daimler AG has committed itself to comprehensive protection of the environment.

The objectives are for the natural resources which form the basis of our existence on this planet to be used sparingly and in a manner which takes the requirements of both nature and humanity into account.

! Text marked in this way alerts you to the risk of possible material damage or malfunctions.

Notes marked in this way contain useful tips and additional information.

▶ These items explain individual steps.

Screen displays are printed in `this font`.

- Bullet lists present you with possible selections.

DRAFT

Thank you for choosing the new Mercedes-Benz Rear-Seat Entertainment System

The Rear-Seat Entertainment System comprises either a single screen (single system) or two screens (dual system). This makes it possible for the rear-seat passengers to watch a movie during the journey, for example. The rear-seat passengers listen to the audio using headphones or Bluetooth® speakers.

Familiarize yourself with your Rear-Seat Entertainment System first, and read these Operating Instructions before you start using the Rear-Seat Entertainment System.

Mercedes-Benz is continuously updating its Rear-Seat Entertainment System and therefore reserves the right to introduce changes in design, equipment and technical features. You cannot, therefore, base any claims on the illustrations or text content in these instructions.

Keep these Operating Instructions together with the vehicle Operator's Manual.

These operating instructions refer to the vehicle Operator's Manual. Please keep these at hand for reference.

Should you have any further questions, please contact an authorized Mercedes-Benz Center.

Mercedes-Benz Accessories GmbH

A Daimler Company

DRAFT

Safety

General safety notes

⚠ **WARNING**

Your attention must always be focused on the traffic conditions. As the driver, do not attempt to make adjustments to the Rear-Seat Entertainment System while driving. While the vehicle is in motion, the Rear-Seat Entertainment System may only be used and operated by the rear-seat passengers, provided that they remain seated with their seat belts fastened.

When operating the Rear-Seat Entertainment System with Bluetooth® loudspeakers, make sure that the sound volume is not exceeded, so that in particular external noise can always be properly perceived.

⚠ **WARNING**

The Rear-Seat Entertainment System contains no parts which you can service yourself. For safety reasons, only let a qualified specialist workshop perform any possible maintenance work.

Mercedes-Benz recommends that you use an authorized Mercedes-Benz Center for this purpose.

⚠ **WARNING**

Do not pour or spray fluids over the screens of the Rear-Seat Entertainment System. This could result in a fire or electrical shock.

! When folding back the rear bench seat, make sure that the rear bench seat does not collide with the front seats and the Rear-Seat Entertainment System screens. You could otherwise damage the screens and the rear bench seat.

! When adjusting and folding down the seats, there is a danger the screens could collide with adjacent components if the screens are fitted. Adjust the seat with appropriate care to prevent damage.

! Different sources of radiation, e.g. mobile phones, can interfere with the Rear-Seat Entertainment System. This can impair the playback quality. Keep the number of sources of radiation in the vehicle as low as possible.

Problem-free use

High temperatures

Protect the screens from constant direct sunlight.

! If a screen becomes very hot, a safety mechanism switches it off.

Low temperatures

Strong temperature fluctuations can result in condensation forming on the internal parts of the screens. This can impair the functionality. Wait until the screens have adjusted to the ambient temperature before switching them on.

DRAFT

Overview

Control elements

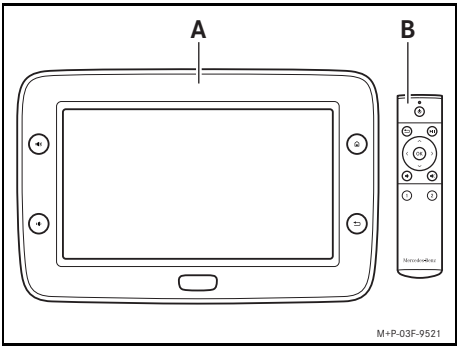

(A) Monitor (1 screen for single system; 2 screens for dual system)

(B) Remote control

ℹ Commercially available Bluetooth® headphones, Bluetooth® speakers or corded headphones are required to listen to the audio playback. Please observe the notes in the manufacturer's operating instructions.
Audio playback malfunctions can arise when using headsets.

ℹ The Rear-Seat Entertainment System can be used outside of the vehicle. To do so, an adapter cable (12 V/ 1.5 A) is required for the power supply. Please observe the notes in the manufacturer's operating instructions.

Remote control

⚠ **WARNING**

Secure the remote control in the available storage spaces when the vehicle is in motion. Otherwise, it could be thrown around the vehicle interior in the event of heavy braking, sudden changes of direction or an accident, possibly injuring you or others.

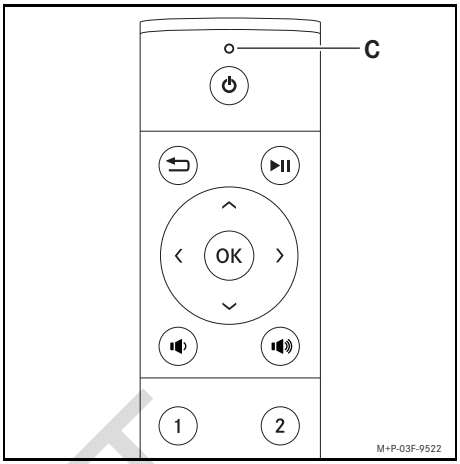

(C) LED (red/green)

⏻ Switching off

↩ Back

▶II Play/pause

∧ ∨ ‹ › Navigation buttons in the operating menu

OK Enter button

🔈 Decrease the volume

🔊 Increase the volume

1 Activate screen 1

2 Activate screen 2

ℹ For the remote control to function properly, it must be aimed precisely at the desired screen from a distance of less than 79 inch (2 m).

DRAFT

Screen

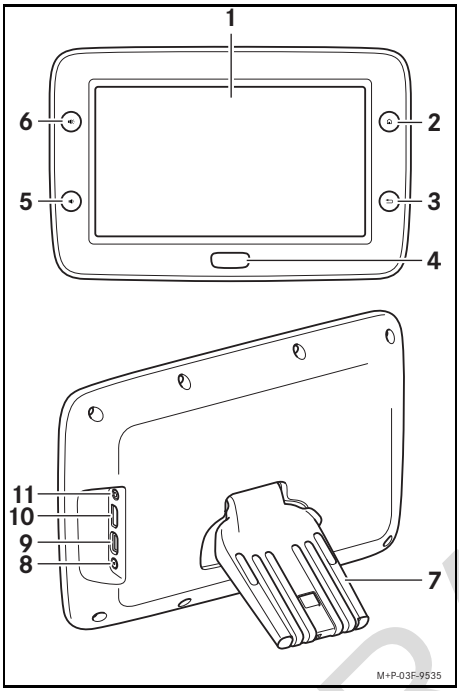

(1) Touchscreen

(2) Main menu display

(3) Back

(4) Switching on/off

(5) Decreasing the volume

(6) Increasing the volume

(7) Foot

(8) Headphones socket (3-pin 3.5 mm jack)

(9) USB port (type A)

(10) HDMI port

(11) Power connection (12 V/1.5 A)

Controls in detail

Screen

WARNING

Check that the screens are securely attached before every journey. Re-install the screens again if necessary.

Do not use damaged screens.

Incorrectly installed or damaged screens can come loose in the event of heavy braking, an sudden change of direction or an accident and be thrown around, thereby injuring vehicle occupants.

WARNING

Remove the screens from the vehicle after every use.

A screen installed in the vehicle can otherwise injure the rear passengers in the event of heavy braking, a sudden change of direction or an accident.

Installing a screen

! Before installing a screen, remove all objects fixed to the struts of the head restraint, e.g. coat hangers.

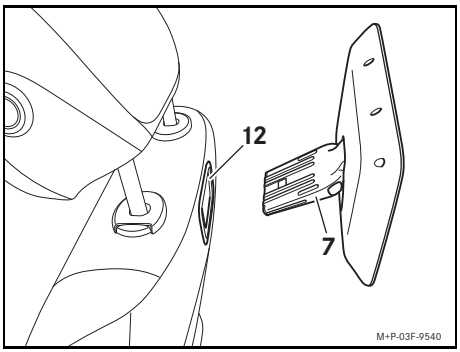

▶ Position foot (7) on the cover of preinstallation (12).

ⓘ The cover unlocks automatically when the foot touches it.

DRAFT

▶ Insert foot (7) into preinstallation (12) until it engages audibly into place.

Removing the screen

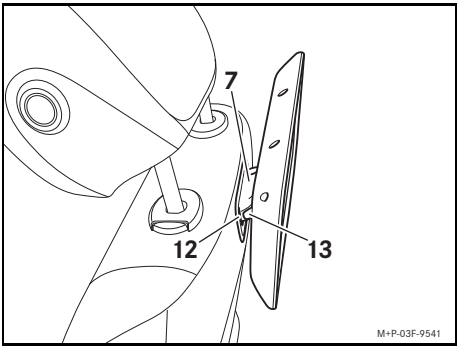

▶ Press button (13) and pull foot (7) out of preinstallation (12).

Switching on the screen

▶ Turn the SmartKey in the ignition to position 1; see the vehicle Operator's Manual. Information for vehicles with KEYLESS-GO can be found in your vehicle Operator's Manual.

▶ Press button (4) on the screen until the icons on the side light up.

The screen is switched on.

▶ When first using the Rear Seat Entertainment System or after resetting to the factory settings you must

- select the system language and
- set a search name for the device.

ⓘ The device's search name must consist of 3 to 16 characters and it must be different for each screen.

ⓘ It is not possible to switch the screen on using the remote control.

ⓘ During charging, the symbol appears in the status bar at the top left.

Switching off the screen

▶ **Screen:** Press and hold button (4) for approx. 3 seconds.

▶ **Remote control:** Press and hold button ⏻ for approx. 3 seconds.

The screen switches off. Media playback is interrupted and has to be started again after switching on.

⚠ **WARNING**

If you leave children unsupervised in the vehicle, they could set the vehicle in motion, for example by:

- releasing the parking brake
- shifting the automatic transmission out of park position **P**
- starting the engine.

In addition, they might operate vehicle equipment and become trapped. There is a risk of accident and injury.

When leaving the vehicle, always take the SmartKey with you and lock the vehicle. Never leave children unsupervised in the vehicle.

ⓘ The screens of the Rear-Seat Entertainment System are also switched off when the vehicle ignition is switched

DRAFT

off. They remain switched on when the vehicle's SmartKey is in position 1 in the ignition lock; see the vehicle Operator's Manual. Information for vehicles with KEYLESS-GO can be found in your vehicle Operator's Manual.

Screen in standby mode

- **Screen:** Briefly press button (4).
- **Remote control:** Briefly press the ⏻ button.

  The screen goes black. Media playback is halted at the current position.

ⓘ The screen is switched back on by pressing the button again and media playback can be continued.

Cleaning the screen

To clean, use a soft, lint-free cloth moistened with water.

Remote control

- Before using the system for the first time, insert the batteries in the remote control.

Replacing batteries

⚠ **WARNING**

Batteries contain poisonous and caustic substances. You should therefore keep batteries out of the reach of children.

If a person swallows a battery, immediately seek medical help.

Environmental note

Batteries contain harmful substances. It is against the law to dispose of batteries with household waste. They must be collected separately and disposed of in an environmentally friendly manner.

Dispose of batteries in an environmentally friendly manner. Hand over discharged batteries to a qualified specialist workshop or a collection point for used batteries.

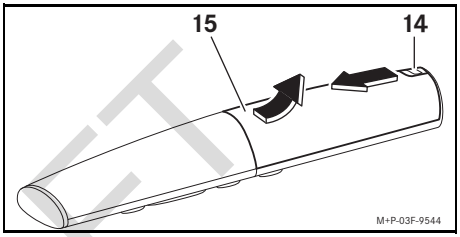

- Push lock (14) forward, raise cover (15) slightly and pull out forwards.
- Remove old batteries and insert new batteries, observing the correct polarity.
- Insert and lock cover (15).

Pairing the remote control and screen

❗ Make sure that only one screen is switched on during the pairing process.

- Switch on the selected screen
- Press buttons OK and ⮌ on the remote control until the LED of the remote control flashes red three times.
- Press and hold button 1 or 2 on the remote control until the LED of the remote control lights up for approx. 3 seconds.

  The selected screen can be operated using the remote control.

ⓘ The LED flashes red during the pairing process.

DRAFT

▶ Switch off the current screen and, if applicable, pair the other screen with the remote control. To do so, select the remaining available button (2) or (1) on the remote control.

Switching the remote control to the desired screen

▶ Switch on the desired screen.

▶ Press button (1) or (2) on the remote control.

When operating screen (1), the LED of the remote control lights up red; when operating screen (2) it lights up green.

Navigation within the menu

ⓘ It is not possible to use the speller to enter characters or numbers via the remote control.

Touchscreen

▶ Select the desired menu by briefly tapping the touchscreen.

▶ Slide the scroll bar slowly up or down to scroll through lists.

ⓘ Press button ⮌ on the screen to leave the menu selection and return to the next menu up.

Remote control

▶ Briefly press button ›, ‹, ⌃ or ⌄ to navigate to the desired menu.

The selected menu is marked in color.

▶ Press the (OK) button to confirm the menu selection.

▶ Press button (⮌) to leave the menu selection and return to the next menu up.

Headphones

⚠ **WARNING**

Make sure that the volume is set to minimum on the screen before putting on the headphones. Otherwise you could damage your hearing.

Each screen can be connected with one set of Bluetooth® headphones/speakers each as well as one set of cabled headphones via the headphones jack.

ⓘ Bluetooth® headphones/speakers and corded headphones are available in specialist stores. Please observe the notes in the manufacturer's instructions.

Pairing Bluetooth® headphones/speakers

ⓘ Pairing cannot be carried out using the remote control.

On Bluetooth® headphones/speakers:

▶ Activate Bluetooth® and, if necessary, pairing mode on the headphones/speakers; see the manufacturer's operating instructions.

On the screen:

▶ Activate Bluetooth®: Settings > Pairing > Turn Bluetooth On

The list of available Bluetooth® devices appears.

▶ Select the desired Bluetooth® headphones/speakers from the list.

The 🎧 symbol appears in the status bar at the top right.

Unpairing Bluetooth® headphones/speakers

On the screen:

▶ Select connected Bluetooth® headphones/speaker under Settings > Pairing.

▶ To unpair: Select Unpair.

DRAFT

Basic settings

You can select basic settings separately for each screen in the following menus.

Comfort menu

- Sound > Volume: Adjusts the volume
- Sound > Equalizer: Regulates treble and bass
- Brightness: Sets screen brightness

ⓘ You can also regulate volume and brightness individually in the Music, Videos and Photos menus.

Settings menu

Wi-Fi menu

- Access Point Mode: Displays the search name of the device and sets the Wi-Fi password

! When the screen is reset to factory settings, the search name of the device and the Wi-Fi password are deleted.

ⓘ Choose a secure Wi-Fi password with 8 to 16 characters.

- Wi-Fi Connection: Switches Wi-Fi on/off; activates/deactivates automatic connection; connects/disconnects networks

ⓘ When Wi-Fi is activated, the symbol appears in the status bar at the top right.

Pairing menu

In this menu, Bluetooth® can be switched on/off; Bluetooth® headphones/speakers can be paired/unpaired.

Language menu

You can set the screen operating language in this menu.

Update menu

ⓘ Please contact your authorized Mercedes-Benz Center if you have any questions concerning your Rear-Seat Entertainment System.

About menu

Technical information can be displayed in this menu: software version, storage capacity and serial number

Factory Reset menu

Resets all settings to factory settings.

Data sources

The Rear-Seat Entertainment System offers the option of playing back media from various different data sources.

- USB: To access media from an inserted USB stick (type A).
  Navigation via buttons on the screen, touchscreen and remote control
- Get USB: Accesses media from a USB stick (type A) inserted into the other screen.[1]
  Navigation via buttons on the screen, touchscreen and remote control

1 This symbol can only be selected if two screens are used (dual system). There must be a Wi-Fi connection between the screens.

DRAFT

- HDMI: Accesses media from an end device connected via HDMI (e.g. laptop, smartphone).

  Navigation using the buttons on the screen and the connected end device
- Browser: Accesses media from the Internet.[2]

  Navigation via buttons on the screen and touchscreen

ⓘ There is no child protection feature available in the standard browser.

- Share Screen: Sends an image to the other screen.[2]

  Navigation via buttons on the screen, touchscreen and remote control
- Get Screen: Receives images from the other screen.[2]

  Navigation via buttons on the screen

Media playback

ⓘ For the remote control to function properly, it must be aimed precisely at the desired screen from a distance of less than 2 m.

Play

▶ Select the desired data source in the main menu.

▶ Select Music, Videos or Photos.

A list of available files is displayed.

ⓘ The list is shown in alphabetical order and displays all files of the selected category which are present on the end device.

▶ Select the desired file.

Playback starts automatically.

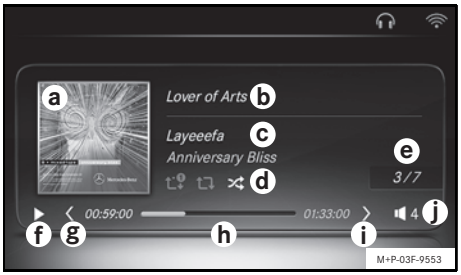

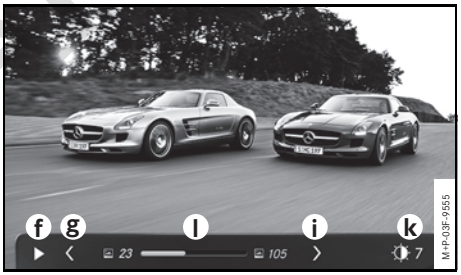

(a) Preview image of the selected album

(b) Name of the file currently being played

(c) Name of artist and album

(d) Playback options of the selected album

- Repeat once
- Repeat continuously
- Random playback

(e) File/number of files currently playing on the selected album

DRAFT

2 There must be a Wi-Fi connection.

(f) Current playback mode:
- ▶ Starts playback/slide show
- ❚❚ Pause

(g) To switch to the previous file

(h) 00:59:00: Current playback time
01:33:00: Total playback time

(i) To move to the next file

(j) Current volume setting

(k) Current brightness setting

(l) 23: Image currently being displayed
105: Total number of images in the selected folder

ℹ The control bar disappears after approx. 5 seconds. The control bar can be shown again by touching the touchscreen or operating the arrow buttons on the remote control.

Pause

▶ To stop playback:
Touchscreen: Tap the ❚❚ symbol
Remote control: Press the (▶❚❚) button

▶ To start playback:
Touchscreen: Tap the ▶ symbol
Remote control: Press the (▶❚❚) button

Rewind/fast-forward

▶ **Touchscreen:** Slowly slide yellow playback bar to the right or left.

Previous or next file

▶ Tap the ❮ or ❯ symbol repeatedly or press the ‹ or › buttons on the remote control until you reach the desired file.

Adjusting the volume

▶ **Touchscreen:** Tap the 🔊 symbol and set the desired volume with ∨ (quieter) and ∧ (louder).

▶ **Remote control:** Press the (🔈) (quieter) or (🔊) (louder) button.

▶ **Screen:** Press the 🔈 (quieter) or 🔊 (louder) button.

Setting the brightness

▶ **Touchscreen:** Tap the ◐ symbol and set the desired brightness with ∨ (lighter) and ∧ (darker).

▶ **Remote control:** Select the ◐ symbol using the arrow keys and press (OK) to confirm. Set the desired screen brightness with ∨ (lighter) and ∧ (darker).

Transferring content

Wi-Fi connection between end device and screen

Content (music, videos and photos) can be transferred from a Wi-Fi-enabled end device to a screen of the Rear-Seat Entertainment System.

Technical requirement:
- End device is DLNA-enabled or
- there is a DLNA-enabled app installed on the end device

▶ Establish a Wi-Fi connection between the screen and the end device.

▶ Activate the DLNA-enabled app on the end device; see the manufacturer's operating instructions.

▶ Approve sharing of the desired media on the end device itself.
The media are played back on the screen of the Rear-Seat Entertainment System.

ℹ Operation occurs using the connected end device; see the manufacturer's operating instructions. Playback can be

DRAFT

canceled on the end device and the screen or by using the ⮌ and ⌂ buttons of the remote control.

Sharing a screen with the other screen

With the dual system, you have the possibility of sending the picture on one screen to the other screen.

▶ **Transmitting screen:** Settings > Wi-Fi > Activate Access Point

▶ **Receiving screen:** Settings > Wi-Fi > Wi-Fi Connection > select transmitting screen from the list of available end devices and enter the password of the transmitting screen.

A Wi-Fi connection between the screens is established.

▶ **Transmitting screen:** Share Screen > Share

ⓘ The symbol appears in the status bar on the top left.

▶ **Receiving screen:** Get Screen > Accept

The display of the receiving screen goes black.

▶ **Transmitting screen:** Press the ⌂ button on the screen.

The same picture appears on both screens.

ⓘ Navigation is active on the transmitting screen. On the receiving screen, settings can only be controlled via the buttons on the screen.

▶ **To end screen sharing:** Select Share Screen > Cancel on the transmitting screen.

Connecting external devices

USB port

The Rear-Seat Entertainment System supports USB type A[3].

HDMI port

Via the HDMI port, external end devices (e.g. laptop, Apple iPod©, Apple iPhone©, games consoles) can be connected.

Operation of the media occurs using the connected end device; see the manufacturer's operating instructions. The volume can be adjusted using the buttons on the screen as well as via the remote control.

What should I do if...?

Malfunctions

Below is a list of frequently asked questions so that minor problems do not spoil any of the many entertainment features included with your Rear-Seat Entertainment System. Should you have any further questions, please contact an authorized Mercedes-Benz Center.

What should I do if the remote control does not work properly?

- Check if the desired screen (1) or (2) is selected on the remote control.
- Pair Bluetooth® remote control with the desired screen again.
- Reduce the number of sources of radiation in the vehicle.
- Replace the batteries.

What should I do if the screens remain black?

- Switch on the vehicle's ignition.
- Check the connection to externally connected end devices.
- Remove the screen from the preinstallation in the seat, clean the contacts and insert the screen in the preinstallation on the vehicle seat again.

3 Not all devices with USB 2.0 are supported due to compatibility issues. Some external hard drives and digital cameras are excluded, for example.

DRAFT

- Have the fuses of the vehicle seat checked by an authorized Mercedes-Benz Center.

Technical data

Screen

Screen type	TFT-LCD
Screen size	25.7 cm (10.1 inches)
Resolution (width x height)	1024 x 600 pixels
Inputs	USB type A HDMI Power connection (12 V/1.5 A)
Outputs	3-pin 3.5 mm jack

Headphones socket

3-pin 3.5 mm jack

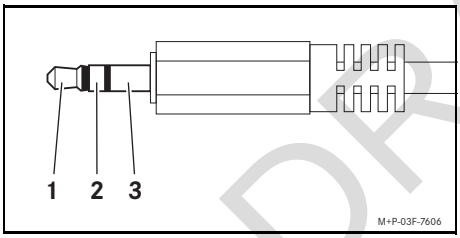

- (1) Audio L
- (2) Audio R
- (3) Ground

Remote control

Battery	AAA (2x)

File formats

Audio formats

The following audio formats can be played:

- MPEG-2
- MP3
- WMA
- ACC
- WAV
- FLAC
- OGG

Video formats

The following video formats can be played:

- MPEG-1 and MPEG-4
- DivX
- Xvid
- WMV
- H.264
- MKV
- FLV

Picture formats

The following image formats can be displayed:

- JPEG
- GIF
- PNG
- BMP

DRAFT

Product info

Mercedes-Benz A213 820 43 03	
Mercedes-Benz A213 820 41 03	
Hardware Rev 4	
Software 1.6.9	
Output Power	**WLAN:** 802.11a: 14 dBm +/- 2 dBm (54M) 802.11b: 16.5 dBm +/- 2 dBm (11M) 802.11g: 14.5 dBm +/- 2 dBm (54M) 802.11n 5G HT20: 13 dBm +/- 2 dBm (MCS7) 802.11n 5G HT40: 13 dBm +/- 2 dBm (MCS7) 802.11n 2.4G HT20: 13.5 dBm +/- 2 dBm (MCS7) 802.11n 2.4G HT40: 13.5 dBm +/- 2 dBm(MCS7) **Bluetooth®:** +0 ≤ Output Power ≤ +10 dBm (Class 1.5 for Haswell)
A213 820 43 03	Manufactured by AERO VISION INC Address: 2F, 30 R&D 2ND RD., SCIENCE-BASED INDUSTRIAL PARK, HSIN-CHU, TAIWAN, 300
A213 820 41 03	Manufactured by Dusun Electron Co Ltd Address: 640 FengQing Street, Moganshan Economic Development Zone, Deqing, Huzhou, China

DRAFT

Declarations of conformity

RED (EG)

Electromagnetic compatibility

The electromagnetic compatibility of the Mercedes-Benz links has been tested and proven according to the regulation ECE-R 10, in the current version.

Radio-based components

The following note is valid for all radio-based components of the Mercedes-Benz Rear-Seat Entertainment System:

The radio-based components of this device are in accordance with the essential requirements and the other relevant provisions of Directive 2014/53/EU. For further information, please contact each Mercedes-Benz service base.

FCC (USA)

Changes or modifications not expressly approved by the party responsible for compliance could void the user's authority to operate the equipment.

This equipment has been tested and found to comply with the limits for a Class B digital device, pursuant to Part 15 of the FCC Rules. These limits are designed to provide reasonable protection against harmful interference in a residential installation. This equipment generates, uses and can radiate

radio frequency energy and, if not installed and used in accordance with the instructions, may cause harmful interference to radio communications. However, there is no guarantee that interference will not occur in a particular installation.

If this equipment does cause harmful interference to radio or television reception, which can be determined by turning the equipment off and on, the user is encouraged to try to correct the interference by one or more of the following measures:

- Reorient or relocate the receiving antenna.
- Increase the separation between the equipment and receiver.
- Connect the equipment into an outlet on a circuit different from that to which the receiver is connected.
- Consult the dealer or an experienced radio/TV technician for help.

IC (Canada)

This device complies with Industry Canada license-exempt RSS standard(s). Operation is subject to the following two conditions: (1) this device may not cause interference, and (2) this device must accept any interference, including interference that may cause undesired operation of the device.

Le présent appareil est conforme aux CNR d'Industrie Canada applicables aux appareils radio exempts de licence. L'exploitation est autorisée aux deux conditions suivantes : (1) l'appareil ne doit pas produire de brouillage, et (2) l'utilisateur de l'appareil doit accepter tout brouillage radioélectrique subi, même si le brouillage est susceptible d'en compromettre le fonctionnement.

This equipment complies with FCC /IC RSS-102 radiation exposure limits set forth for an uncontrolled environment. This equipment should be installed and operated with minimum distance 20 cm between the radiator and your body.

Cet équipement est conforme aux limites d'exposition aux radiations FCC/IC CNR-102 établies pour un environnement non contrôlé. Cet équipement doit être installé et utilisé avec une distance minimale de 20 cm entre le radiateur et votre corps.

i. the device for operation in the band 5150–5250 MHz is only for indoor use to reduce the potential for harmful interference to co-channel mobile satellite systems;

i. le dispositif utilisé dans la bande 5150-5250 MHz est réservé à une utilisation en intérieur afin de réduire le risque de brouillage préjudiciable aux systèmes mobiles par satellite dans le même canal;

NOM (Mexico)

La operación de este equipo está sujeta a las siguientes dos condiciones: (1) es posible que este equipo o dispositivo no cause interferencia perjudicial y (2) este equipo o dispositivo debe aceptar cualquier interferencia, incluyendo la que pueda causar su operación no deseada.

EAC (Russia)

Logo	EAC
Product Name	Mercedes-Benz
Model Number	A213 820 43 03
Voltage	12 V Negative ground
Manufacturer	Centurion Electronics
Country of Origin	Taiwan
Scope of Use	Rear-Seat Entertainment System

DRAFT

ICC (South Korea)

⚠ **WARNiNG**

해당 무선설비가 전파혼신 가능성이 있으므로 인명안전과 관련된 서비스는 할 수 없습니다

DRAFT