DHAN-J Module

DECT-ULE Platform

Datasheet

Version: 2.2

March 13 2018

Headquarters
USA
DSP Group Inc.
161 S San Antonio Rd
Suite 10
Los Altos, CA 94022
Tel: (408)986-4300
Fax:(408)986-4323

Israel
DSP Group Ltd.
5 Shenkar Street
Herzelia, Israel 4672505
Tel: 972-9-952-9696
Fax: 972-9-954-1234

Europe
Germany
DSPG Technologies GmbH
Nelson-Mandela-Platz 18
90459 Nurnberg
Tel: +49-911-2001-0
Fax: +49-911-2001-1210

Scotland
DSPG Edinburgh Ltd.
Geddes House
Kirkton North
Livingston EH54 6GU
Tel: +44-1223-772200

APAC
China
DSP Group (HK) Limited
Unit 1-4, 11/F,
909 Cheung Sha Wan Rd.
Kowloon
Hong Kong
Tel: +852-(3965)-5888

DSP Group (Shenzhen) Limited
Room 1819, 18/F
Kerry Centre, Renminnan Road,
Shenzhen, China 518001
Tel: +(86 755) 2518 1214

Ascend Technology Inc.
Room 1303,
New World Center,
No.6009 Yitian Road,
Futian District,
Shenzhen City, China
Tel: +86-755-820-24598
Fax: +86-755-239-82986

Ascend Technology Inc.
Rm 607,
Hui Huang International Center,
1st Place, Shangdi 10th Road,
Haidian District, Beijing City, P.R.

Japan
DSP Group (Japan) Inc.
1-29-1 Nishi-Gotanda
Shinagawa-Ku Tokyo 141-0031
Tel:+81-(3)-3493-3050

Tomen Electronics
8-27, Kohnan 1 Chome,
Minato-ku, Tokyo
108-8510, Japan
Tel: +81-(3)-5462-9619
Fax: +81-(3)-5462-9686

Korea
Daesung Semiconductors
140-848, RM 401
Wonhyo BD. 46-1
Wonhyo-ro 3ka, Yongsan-gu,
Seoul, Korea
Tel: +82-(2)-3272-7300
Fax: +82-(2)-712-4632-3

India
DSP Technology Indian Private Limited
Information Technology Park
Nagawara Village Kasaba Hobli
Bangalore 560045
Tel: +91 80 4024 8399

Taiwan
Ascendtek Electronics, Inc
11F-7, No. 77, Sec. 1
Hsin Tai Wu Rd.,
Hsi Chih
Taipei Hsien,
Taiwan, R.O.C
Tel: 886-2-2698-8696
Fax: 886-2-8698-2138

This document is provided by DSP Group, Inc. and/or one or more of its subsidiaries ("DSP Group"). All information and data contained in this document is for informational purposes only, without any commitment on the part of DSP Group, and is not to be considered as an offer for a contract. DSP Group shall not be liable, in any event, for any claims for damages or any other remedy in any jurisdiction whatsoever, whether in an action in contract, tort (including negligence and strict liability) or any other theory of liability, whether in law or equity including, without limitation, claims for damages or any other remedy in whatever jurisdiction, and shall not assume responsibility for patent infringements or other rights to third parties, arising out of or in connection with this document. Further, DSP Group reserves the right to revise this publication and to make changes to its content, at any time, without obligation to notify any person or entity of such revision changes. These materials are copyrighted and any unauthorized use of these materials may violate copyright, trademark, and other laws. Therefore, no part of this publication may be reproduced, photocopied, stored on a retrieval system, or transmitted without the express written consent of DSP Group. Any new issue of this document invalidates previous issues.

DSP Group reserves the right to revise this publication and to make changes to its content, at any time, without obligation to notify any person or entity of such revision changes.

© 2018 DSP Group Confidential. All rights reserved.

TABLE OF CONTENTS

1. INTRODUCTION 4
General Description 4
Features 4
Block Diagram 4

2. PIN AND SIGNAL DESCRIPTION 5

3. MODULE ELECTRICAL SPECIFICATIONS 7
Absolute Maximum Rating 7
Recommended Operating Conditions 7
Peak Currents and Hibernation Current 7
Transmitter 8
Receiver 8

4. REFERENCE SCHEMATIC 9
Module and External Host Interface 9
Power Supply and Optional JTAG 9
Optional Audio and 32KHz XTAL 10
Interfacing to an external ASIC Sensor or Actuator 10
Notes to schematic: 11

5. INTERFACING THE DHAN-J WITH AN EXTERNAL MCU 12
RSTN Input 12
Wake Up Input 12
Wake Up Output 12

6. APPLICATION PCB DESIGN RECOMMENDATIONS 13

7. ASSEMBLY INFORMATION 14
Mechanical Drawing 14
PCB Metal Land Pattern Recommendation 15
PCB Solder Mask Recommendation 16
PCB Stencil Pattern Recommendation 16
Pick & Place, Reflow 16

8. SUPPLEMENTARY INFORMATION 17
Labeling (appended to the module shield) 17
Handling Guidance 17
RF Exposure Information and Statement 17
FCC & IC Interference Statement 18
Declaration of Conformance (DOC) 18
IPEI and EMC 18
Ordering Information 19
Change Log 19

1. Introduction

General Description

The DSPG DHAN-J module is based on the state-of-the-art DHX91 - a 3rd generation DECT SOC. The DHAN-J module is suited for a DECT-ULE Device (or Node) applications. The DHAN-J SW stack includes standard DECT-ULE MAC-PHY connectivity as well as HAN-FUN (= the ULE Alliance Standard) functionality for Dual-Mode (data and audio) ULE. The Application SW written by the customer can leverage the DHX91 within the DHAN-J or, alternatively, the application Host can run on external MCU which communicates with the DHAN-J via a UART interface. The API presented by the DHAN-J is called CMND and DSP Group can supply reference code for accessing the ULE connectivity presented at this interface.

Features

- Excellent radio performance, with over 123dB system gain
- A printed antenna is included in the module
- Radio covers all regional DECT bands. A simple re-configuration of the EEPROM is required
- Radio is fully compliant with ETSI DECT and ULE standards. Regulatory (EU, FCC) certification is pending
- Compact module footprint of 27.2x15.2x3.3 (including the RF shield height)
- Minimized external BOM
- Operating Temperature spanning -40ºC to 85ºC

Block Diagram

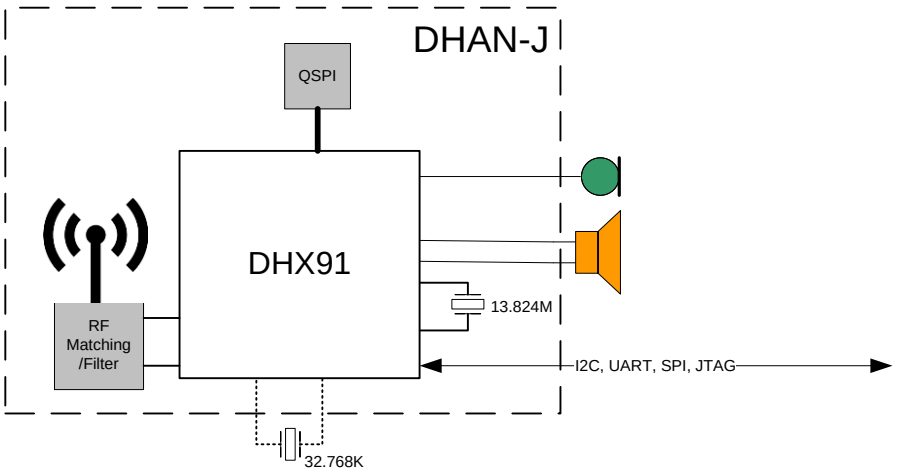

DHAN-J Module Block Diagram

2. Pin and Signal Description

PIN NO.	NAME	DESCRIPTION/TYPE
1	GND	GND
2	ANT2	Test Pin. Leave Unconnected
3	DCINS	Leave as not connected (NC)
4	DCIN3	ADC input used to monitor power supply input
5	RSTN	For application running on an external MCU, this pin should be connected to a MCU IO and used to reset the DHAN-J
6	SCL (GPIO0)	GPIO or I2C Clock. Open Drain, reset value is floating. Leave as not connected if not used
7	SDA (GPIO1)	GPIO or I2C Data. Open Drain, reset value is floating. Leave as not connected if not used
8	IIC_ACK (GPI03)	GPIO or I2C ACK. Leave as not connected if not used
9	GPIO7	GPIO or SPI Data In. Leave as not connected if not used
10	GPIO8	GPIO or SPI Data Out. Leave as not connected if not used
11	RxD (GPIO9)	GPIO or UART Rx (most typically) or SPICLK. See
12	TDI	JTAG Data In. Should be connected to TP (see Application Schematic Section below)
13	TMS	JTAG Mode Select. Should be connected to TP
14	TDO	JTAG Data Out. Should be connected to TP
15	TCK	JTAG Clock. Should be connected to TP
16	RTCK	JTAG Reset. Should be connected to TP
17	GND	GND
18	TxD (GPIO10)	GPIO or UART Tx or SPICS
19-20	GND	
21	VBAT	Power Supply Input. Connect to Battery or regulated supply
22	DOUBCAP2P	Pull down with 1M resistor
23	DCIN2	Leave Unconnected
24	VCC3V	3V (Doubler) Output. While DHAN-J is hibernating, this pin is either in tristate (default SW configuration) or pulled to GND. Can be used in conjunction with GPIO7&8 above to drive an LED or button during non-hibernation modes
25	LEDSINK/DCIN1	ULE I/O. If not used, can be left NC
26	GND	GND

PIN NO.	NAME	DESCRIPTION/TYPE
27	AMP2_OUT	ULE I/O. Typically used (as input) to wake up the DHAN-J from hibernation
28	AMP1_P	ULE non-inverting sensor conditioning input
29	AMP1_OUT	ULE I/O. Typically used (as output) to indicate DHAN-J is active (logic high)
30	MPWR/ANA2_IN	ULE I/O (or Microphone Power). During hibernate, Logic High should not be applied to this pin (it can result in leakage current). If not used, can be left NC
31	MIN	If not used, can be left as NC
32	MIP	If not used, can be left as NC
33	ANA_IN1	ULE I/O. If not used, can be left NC
34	SPOUTP	If not used, can be left as NC
35	SPOUTN	If not used, can be left as NC
36	PWM0	Analog Output
37	XIN_32K	Connect to 32.768 XTAL if required – see application schematic notes
38	XOUT_32K	Connect to 32.768 XTAL if required – see application schematic notes
39	VDD_ULE	1.8V test point. Active during hibernate. Leave NC
40	VBATRF	Power Supply Input to RF
41-42	GND	GND

3. Module Electrical Specifications

All parameters are for 25ºC.

Absolute Maximum Rating

Table 3-1: Absolute Maximum Ratings

Minimum Voltage Applied to all pins: -0.3V
Maximum Voltage Applied to all pins: +4.6V
Storage Temperature Range: -45 to 90ºC

Note: Functionality at or above these limits is not implied. Exposure to absolute maximum ratings for extended periods may affect device reliability.

Recommended Operating Conditions

Table 3-2: Recommended Operating Conditions

RATING	CONDITIONS	MIN	TYP	MAX	UNIT
Operating ambient temperature		-40	+25	+85	°C
VBAT, VBATRF		1.95	3.0	3.6	V
All GPIOs (VCC is at nominal 3V)	VIL VIH VOL VOH	 2.0 2.4		0.8 0.4	V
DCIN3		1.95	3.0	VBAT	V

Peak Currents and Hibernation Current

VBAT=VBATRF = 3V

PARAMETER	TEST CONDITIONS	TYP	MAX	UNIT
Tx Current	Band=EU @ 23dBm	400	480	mA
Tx Current	Band=US @ 21 dBm	250	300	mA
Rx Current	Max Gain Setting	125	135	mA
Hibernation Current		2		µA

Transmitter

VBAT=VBATRF = 3V

Table 3-3: Tx Characteristics

CHARACTERISTICS	TEST CONDITIONS	MIN	TYP	MAX	UNIT
NTP	Band=EU	21.5	23	24	dBm
NTP	Band=US	19	20	21	dBm
Harmonics	Band=EU & US		-40	-35	dBm
Transmission Mask	EN 301406 Paragraph 5.3.3		Comply		N/A
Frequency Offset	EN 301406 Paragraph 5.3.1	-50	8	+50	KHz
Frequency Drift	EN 301406 Paragraph 5.3.5	-15	0	+15	KHz/Slot
Emission Due Modulation	EN 301406 Paragraph 5.3.6.2 M±1 M±2 M±3 M>±3		 -20 -42 -47 -50	 -8 -30 -40 -44	dBm

Receiver

VBAT=VBATRF = 3V

Table 3-4: Rx Characteristics

CHARACTERISTICS	TEST CONDITIONS	MIN	TYP	MAX	UNIT
Sensitivity, BER < 1000ppm	EU Band		-96	-93	dBm
Maximum input power	EU Band			15	dBm

4. Reference Schematic

Module and External Host Interface

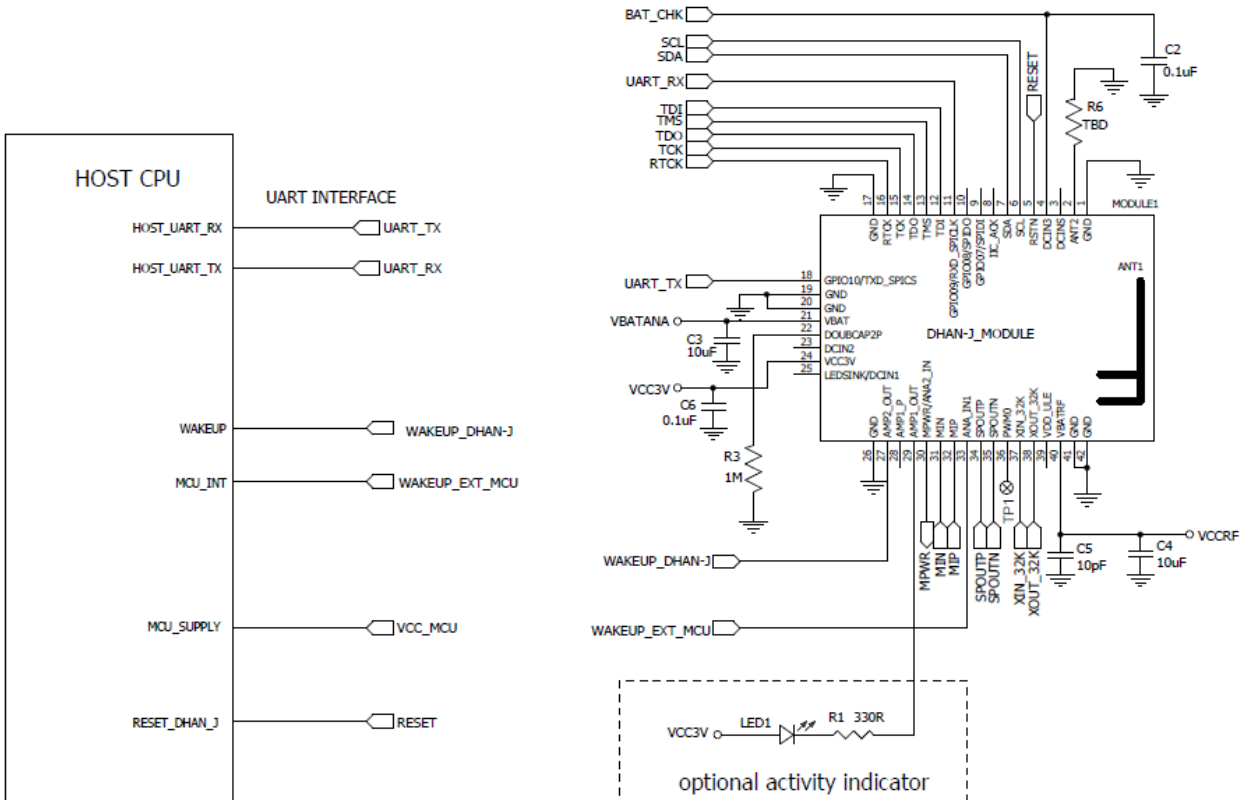

Power Supply and Optional JTAG

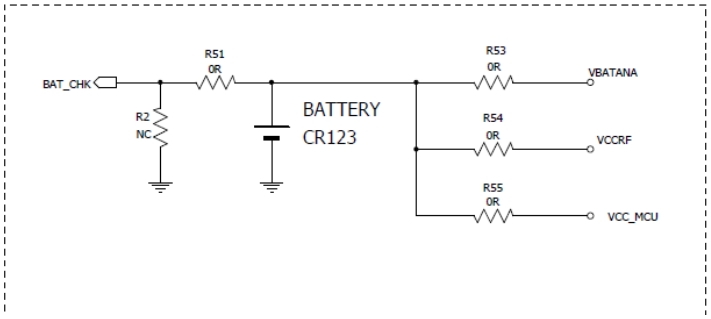

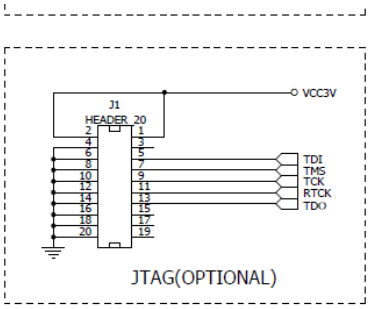

Optional Audio and 32KHz XTAL

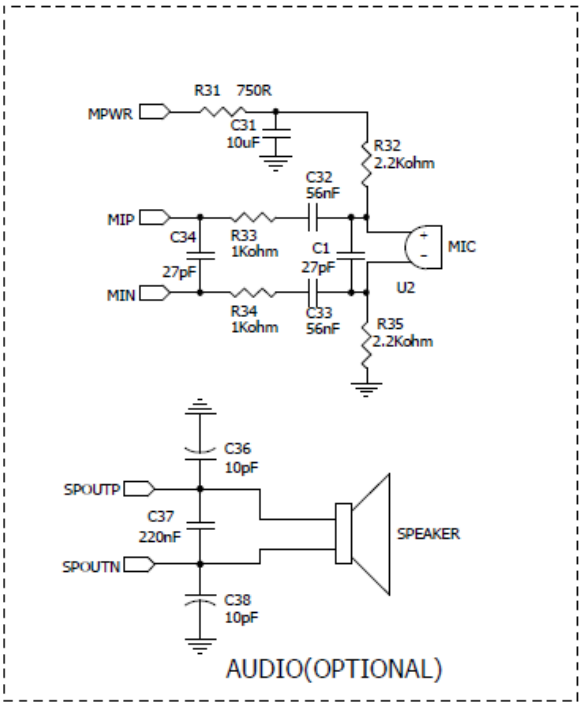

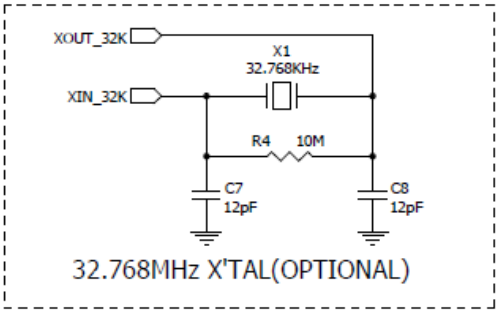

Interfacing to an external ASIC Sensor or Actuator

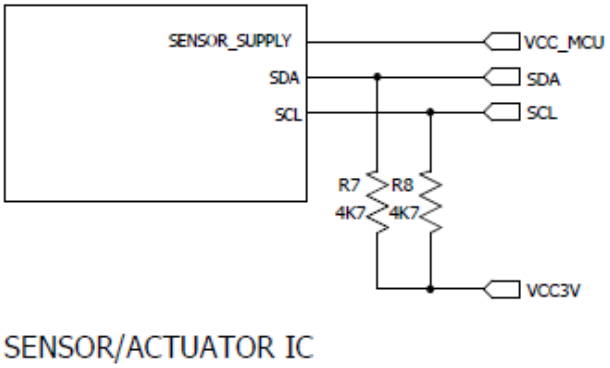

Notes to schematic:

a) For standalone DHAN-J applications, the external MCU can be removed
b) 20-pin JTAG connector is optional. It is recommended for those developing applications on the DHAN-J (DHX91) where debug and reprogramming of the SW image is a must. For applications running on an external MCU, the image on the DHAN-J as shipped should suffice
c) Audio interface is required for dual-mode ULE applications only
d) Sensor interface (I^2C or otherwise) is relevant when the application host runs on the DHAN-J. With the application host runs on an external MCU, sensors or actuators should interface with it and DHAN-J should be used for wireless connectivity only
e) 32KHz XTAL is required for ULE Devices which need to respond to incoming paging from the Hub with low-latency (within seconds or 10's of seconds)

5. Interfacing the DHAN-J with an external MCU

RSTN Input

At power-up, the Application Host on the external MCU should hold this pin at logic Low until it is ready to establish communication (via UART) with the DHAN-J. When ready, the App Host should apply a rising edge (and leave at Logic High) and wait for the “Hello” indication from the DHAN-J. If at some point later on the MCU cannot communicate with the DHAN-J, it should apply a low going pulse of >100uS to reset the DHX91 on the DHAN-J.

Wake Up Input

Wake up the DHAN-J (from hibernation) by applying a positive going edge to AMP2_OUT (Pin27). The DHAN-J will reply at the (UART) CMND API with a “Hello_Ind”. At that point the wakeup signal can be lowered.

Wake Up Output

In applications where the Device can be paged by the Hub, the external MCU can enter hibernation. When paged, the DHAN-J will inform the external MCU via UART. If needed, the DHAN-J can wake up the external MCU by applying a rising edge from ANA_IN1 (Pin33)

6. Application PCB Design Recommendations

It is recommended that unused pads on the Application PCB not be left as isolated islands of copper but rather be anchored with via to inner layers of the PCB. It is also recommend that GND vias be applied liberally in the vicinity of GND pins 25,26 and 28.

The following layout recommendations need to be apply on Main Board:

1. Implement a solid ground under the DHAN-J module
2. Do not route signal traces under the module. Use the bottom layer for signal routing
3. Locate the antenna on the edge of the PCB – as pictured below

7. Assembly Information

An electronic version of the information in this Section can be downloaded from the DSP Group website, in the HW Developer's Collateral section.

Mechanical Drawing

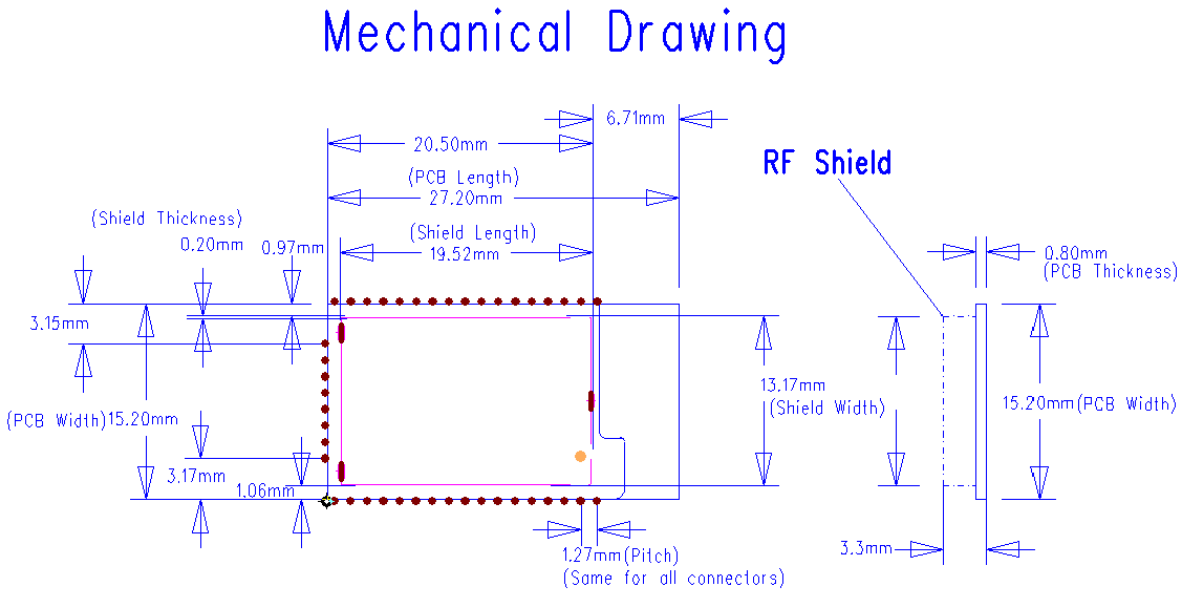

PCB Metal Land Pattern Recommendation

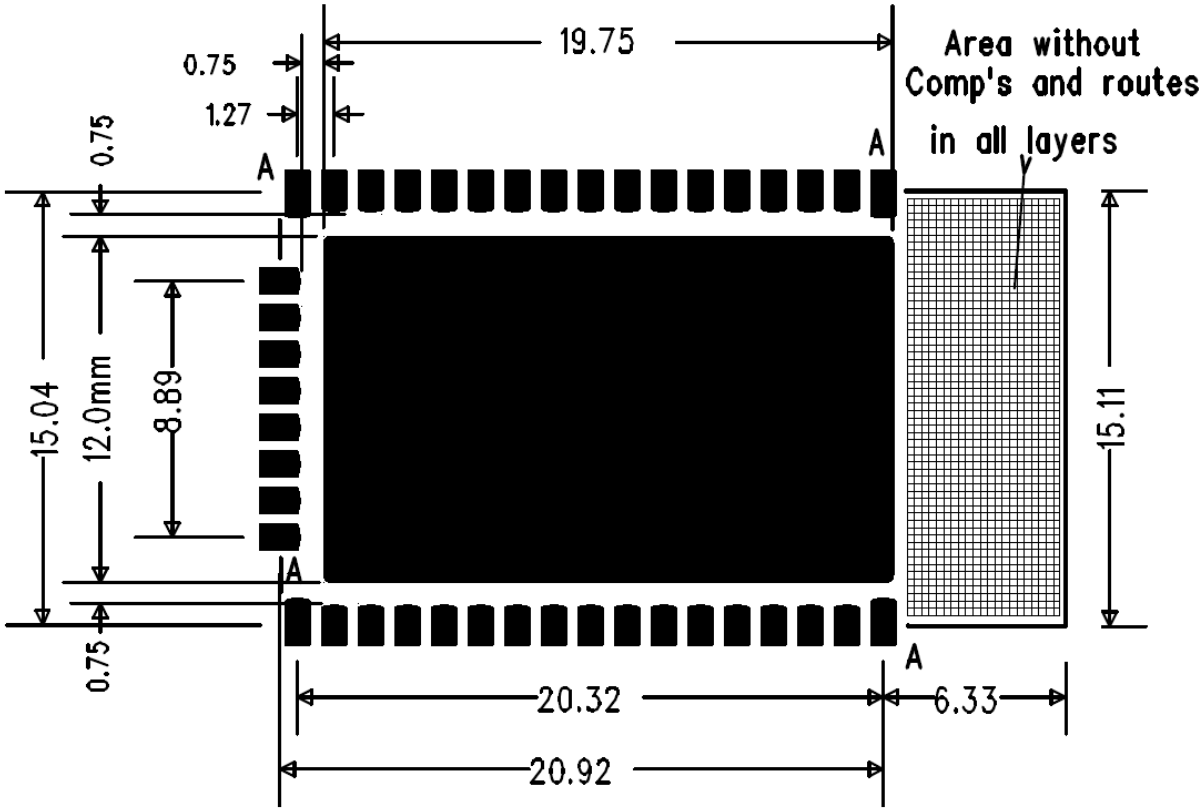

Zoom-In on the Pads

A PADS

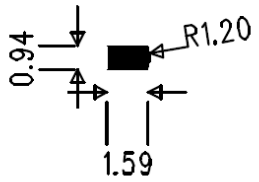

OTHER PADS

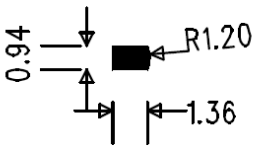

PCB Solder Mask Recommendation

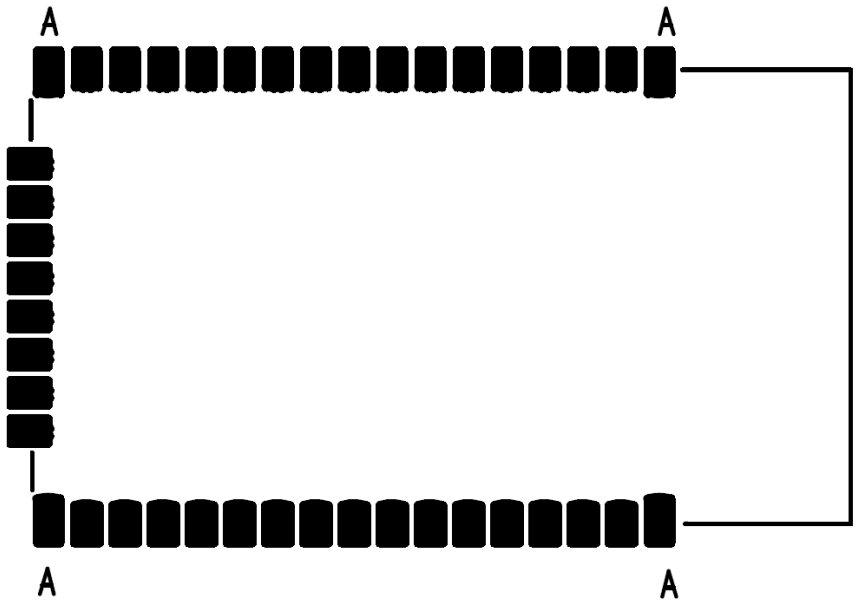

PCB Stencil Pattern Recommendation

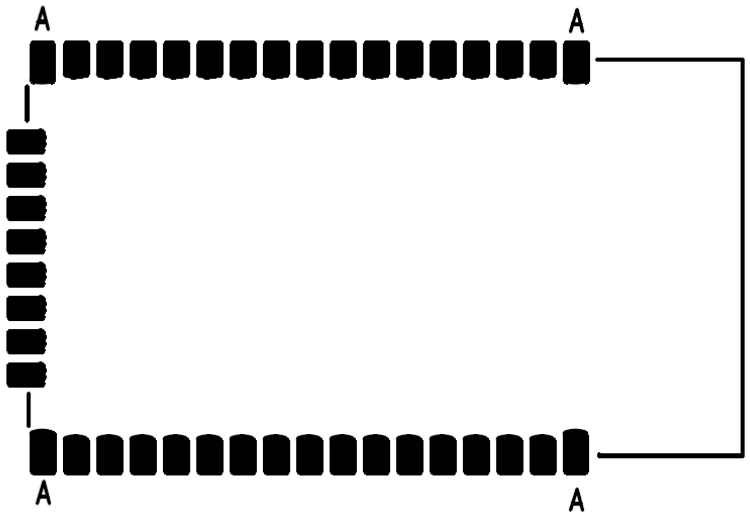

Pick & Place, Reflow

The DHAN-J module uses a flat shield cover to facilitate a fully automatic assembly process. For backing and reflow recommendations, use MSL 3 in the JEDEC/IPC standard J-STD-20b. The temperature classification (TC) for the module is 245° C.

8. Supplementary Information

Labeling (appended to the module shield)

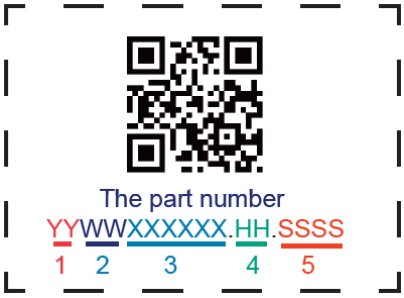

1) Year
2) Week
3) 6-digit serial#
4) HW Version
5) SW Version

Handling Guidance

This module includes highly sensitive electronic circuity. Handling without proper ESD protection may damage the module permanently.

FCC & IC Interference Statement

This device complies with part 15 of the FCC rules and RSS-213 of Industry Canada. Operation is subject to the following two conditions: (1) this device may not cause harmful interference, and (2) this device must accept any interference received, including interference that may cause undesired operation.

Le présent appareil est conforme aux CNR d'Industrie Canada applicables aux appareils radio exempts de licence. L'exploitation est autorisée aux deux conditions suivantes : (1) l'appareil ne doit pas produire de brouillage, et (2) l'utilisateur de l'appareil doit accepter tout brouillage radioélectrique subi, même si le brouillage est susceptible d'en compromettre le fonctionnement.

This Class B digital apparatus complies with Canadian ICES-003.

Cet appareil numérique de la classe B est conforme à la norme NMB-003 du Canada.

NOTE: The manufacturer is not responsible for any radio or TV interference caused by unauthorized modifications to this equipment. Such modifications could void the user's authority to operate the equipment.

NOTE: This equipment has been tested and found to comply with the limits for a Class B digital device, pursuant to part 15 of the FCC Rules. These limits are designed to provide reasonable protection against harmful interference in a residential installation. This equipment generates uses and can radiate radio frequency energy and, if not installed and used in accordance with the instructions, may cause harmful interference to radio communications. However, there is no guarantee that interference will not occur in a particular installation. If this equipment does cause harmful interference to radio or television reception, which can be determined by turning the equipment off and on, the user is encouraged to try to correct the interference by one or more of the following measures:

- Reorient or relocate the receiving antenna.

- Increase the separation between the equipment and receiver.

-Connect the equipment into an outlet on a circuit different from that to which the receiver is connected.

-Consult the dealer or an experienced radio/TV technician for help

- This device and its antenna(s) must not be co-located or operating in conjunction with any other antenna or transmitter

Declaration of Conformance (DOC)

The full text of the EU Declaration of Conformity is available at the following internet address:

www.dspg.com.hk

IPEI and EMC

Each DHAN-J Module is shipped to the customer with a unique IPEI – its DECT identity.

DHAN-J will ship with an "EMC" of 0xFEB. This is the DSP Group "generic" EMC. The EMC setting identifies a Device as belonging to a specific group of ULE Devices/Hubs that utilize some proprietary signaling.

In either case, the customer is free to re-program these parameters.

Ordering Information

Part #: DHX91MDMCFCE7AMI

Change Log

Table 8-1: List of Changes

REVISION	DATE	DESCRIPTION
1.0	June 7, 2017	Baseline release
2.0	February 8, 2018	* Add ESD warning * Add FCC declarations
2.1	February 27, 2018	* Add reference to the EU Declaration of Conformance * Modify label on shield with FCC/IC/CE info

ORIGINAL EQUIPMENT MANUFACTURER (OEM) NOTES

- The OEM must certify the final end product to comply with unintentional radiators (FCC Sections 15.107 and 15.109) before declaring compliance of the final product to Part 15 of the FCC rules and regulations. Integration into devices that are directly or indirectly connected to AC lines must add with Class II Permissive Change.

- The OEM must comply with the FCC labeling requirements. If the module's label is not visible when installed, then an additional permanent label must be applied on the outside of the finished product which states: "Contains transmitter module FCC ID: 2AOUK-DHANJ **.**Additionally, the following statement should be included on the label and in the final product's user manual: "This device complies with Part 15 of the FCC Rules. Operation is subject to the following two conditions: (1) This device may not cause harmful interferences, and (2) this device must accept any interference received, including interference that may cause undesired operation."

- The module is limited to installation in mobile or fixed applications. Separate approval is required for all other operating configurations, including portable configuration with respect to Part 2.1093 and different antenna configurations.

- A module or modules can only be used without additional authorizations if they have been tested and granted under the same intended end-use operational conditions, including simultaneous transmission operations. When they have not been tested and granted in this manner, additional testing and/or FCC application filing may be required. The most straightforward approach to address additional testing conditions is to have the grantee responsible for the certification of at least one of the modules submit a permissive change application. When having a module grantee file a permissive change is not practical or feasible, the following guidance provides some additional options for host manufacturers. Integrations using modules where additional testing and/or FCC application filing(s) may be required are: (A) a module used in devices requiring additional RF exposure compliance information (e.g., MPE evaluation or SAR testing); (B) limited and/or split modules not meeting all of the module requirements; and (C) simultaneous transmissions for independent collocated transmitters not previously granted together.

This Module is full modular approval, it is limited to OEM installation ONLY.
Integration into devices that are directly or indirectly connected to AC lines must add with Class II Permissive Change.
(OEM) Integrator has to assure compliance of the entire end product incluld the integrated Module.
Additional measurements (15B) and/or equipment authorizations (e.g Verification) may need to be addressed depending on co-location or simultaneous transmission issues if applicable.
(OEM) Integrator is reminded to assure that these installation instructions will not be made available to the end user of the final host device.

IC labeling requirement for the final end product:

The final end product must be labeled in a visible area with the following " Contains IC: 23573-DHANJ"

The Host Marketing Name (HMN) must be indicated at any location on the exterior of the host product or product packaging or product literature, which shall be available with the host product or online.

This equipment complies with FCC radiation exposure limits set forth for an uncontrolled environment. This equipment should be installed and operated with minimum distance of 20 cm between the radiator and your body.
This equipment complies with IC radiation exposure limits set forth for an uncontrolled environment. This equipment should be installed and operated with minimum distance of 20 cm between the radiator and your body.

Cet équipement est conforme aux limites d’exposition aux rayonnements de la IC établies pour un environnement non contrôé. Cet équipement doit être installé et fonctionner à au moins 20 cm de distance d’ un radiateur ou de votre corps.