MOBILE AIR CONDITIONER OWNER'S MANUAL

GY20Eng

FOREWORD * CONTENTS

Foreword

Portable Air conditioners are pieces of high value. In order to ensure your lawful rights and interests, please have the professional technicians to do the installation for you. This Instruction Manual is the universal-purpose version for the models of portable air conditioners manufactured by our Co. The appearance of the units that you purchase might be slightly different from the ones described in the Manual, but it does not affect your proper operations and usage.
Please read carefully the sections corresponding to the specific model you choose, and keep the Manual properly so as to facilitate your reference at later time.

Attention:

Before installing and using your portable air conditioner, please read this owner's manual carefully. Store this manual in a safe place for future reference.

1) Always place the unit on a level surface.
2) Never use or store gasoline or other flammable vapor or liquid near this unit unless instructed by this manual.
3) Maintain at least 10 inches (25 cm) clearance space around this unit. Do not block or cover air inlet or outlet grilles.
4) The unit must be connected to a correctly grounded power supply.
5) Do not start or stop the unit by inserting or pulling out the power plug.
6) Do not use an adapter plug or extension cord.
7) Do not use the unit in the immediate surroundings of a bath, a shower or a swimming pool.
8) Do not insert anything into the air outlet. Do not obstruct air inlet or outlet grills unless instructed by this manual.
9) Do not let children play near this unit.
10) Always inspect the cord for signs of damage before use. If the power cord is damaged, it must be replaced by the manufacturer or a qualified service technician.
11) When cleaning the unit, always turn the unit off and unplug the power cord.
12) Do not mix old and new batteries in the remote control.

Contents

PRODUCT DIAGRAM	1
PARTS & ASSEMBLY	2
WINDOW KIT ASSEMBLY	3
WINDOW KIT INSTALLATION	4
SECURITY BRACKET	5
CONTROL PANEL	6
REMOTE CONTROL	7
UNIT OPERATION	9
MAINTENANCE	11
TROUBLESHOOTING	14

PRODUCT DIAGRAM

1. Control Panel
2. Manual Control Louver & Air Outlet
3. Carry Handle
4. Caster
5. Air Filter
6. Continuous Drain Port
7. Hot Air Discharge Opening
8. Air Intake Grille
9. Condensation Drain Hole
10. Exhaust Hose
11. Exhaust Hose Connector
12. Window Kit Adapter Grille
13. Window Kit Adapter
14. Optional Window Kit Adapter Extension
15. Window Kit Panel
16. Wing Nuts
17. Optional Drain Tube
18. Drain Tube Stopper
19. Remote Control
20. Battery
21. Optional Window Security Pack

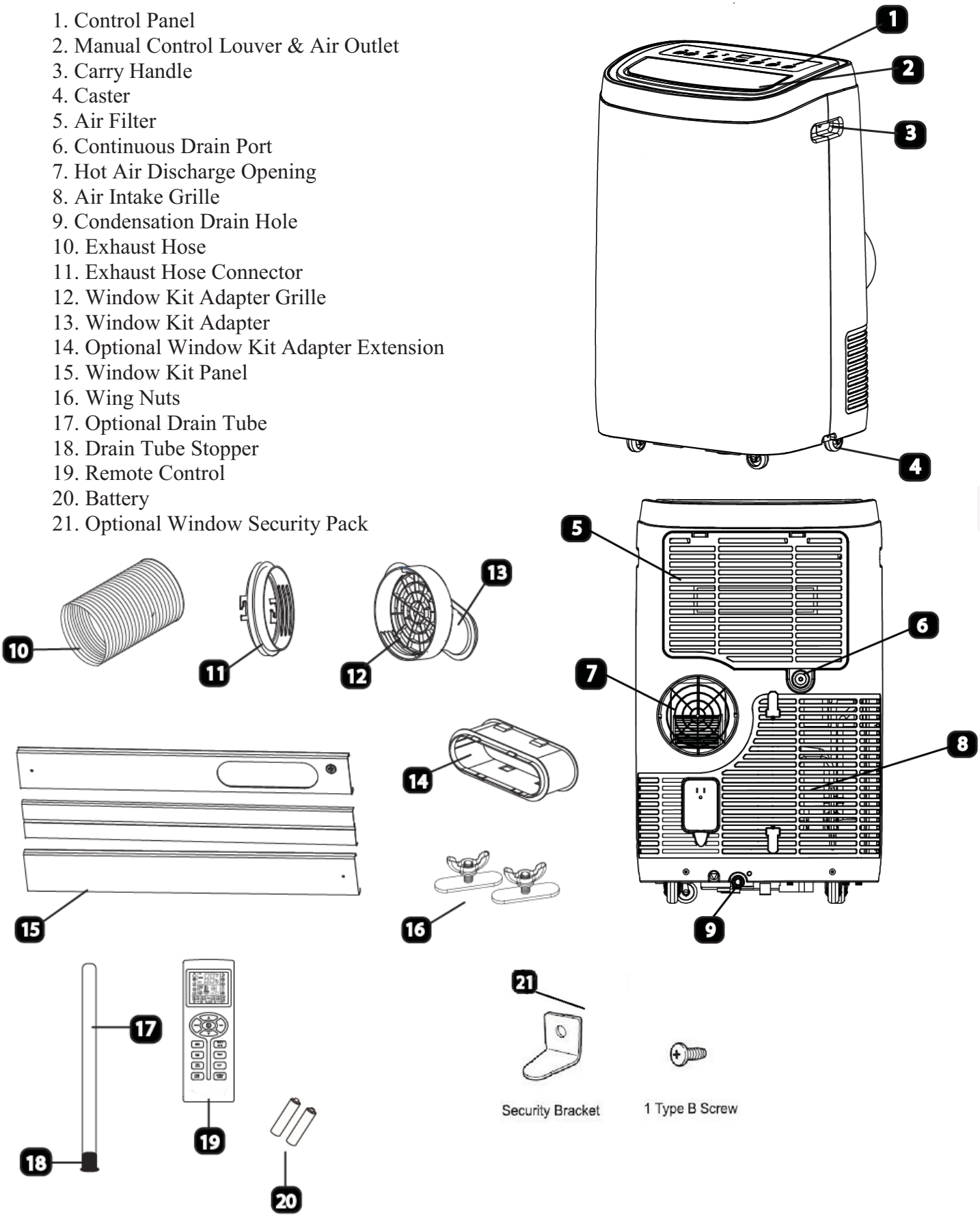

WINDOW VENTING KIT

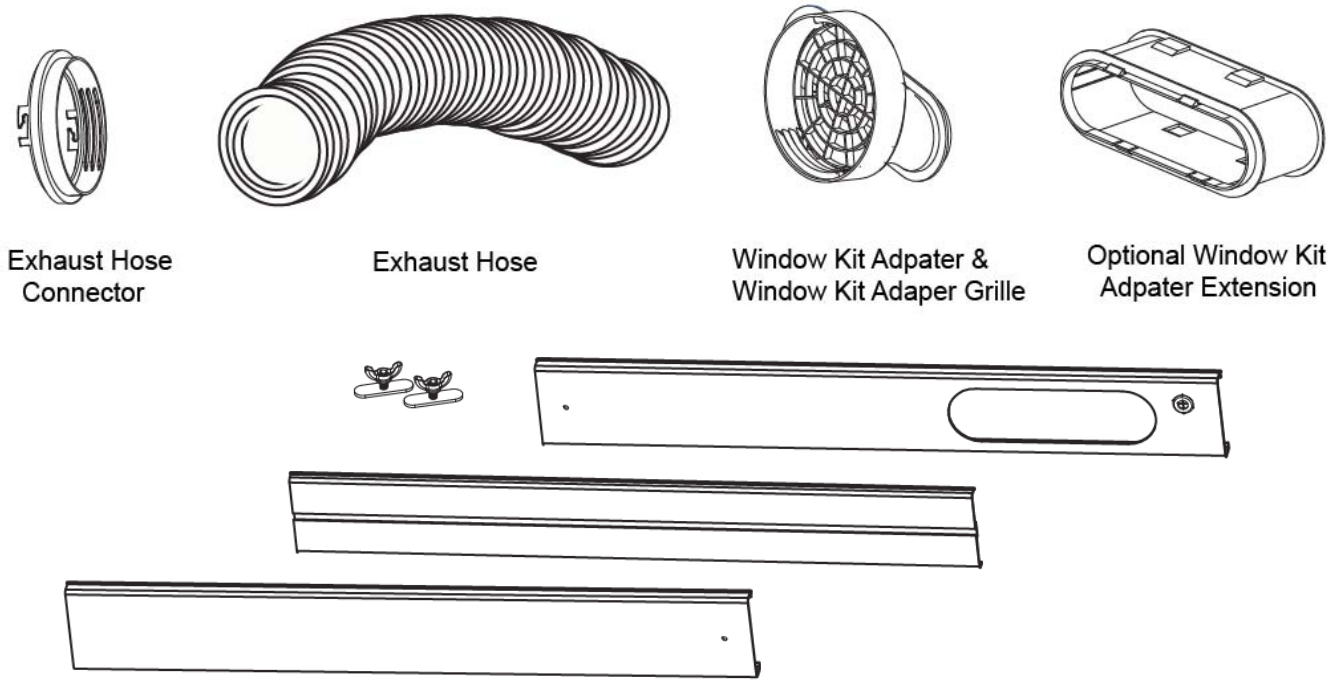

OPTIONAL WINDOW SECURITY BRACKET

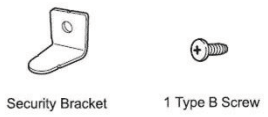

ASSEMBLY & INSTALLATION

When the unit is operating in air conditioning mode, the unit draws in indoor air and exhausts hot air out of the room to complete the air exchange. The Window Kit must be installed when operating the unit in air conditioning, dehumidification and heating modes. When the unit is operating in Fan Mode, no outdoor air exchange takes place. The window kit and exhaust hose do not need to be installed when the unit is used as a fan.

The supplied window kit can be installed in sliding windows and sliding glass doors up to 7 ft. long (approximate length). When installed, be sure to keep the exhaust hose and short and straight as possible for maximum efficiency.

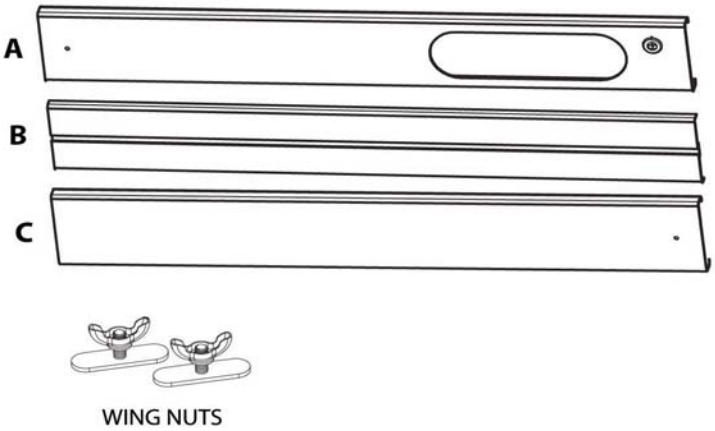

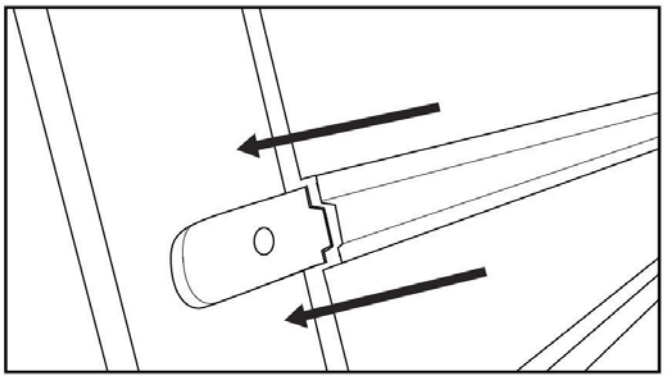

3. Place the Panel B over the Wing Nut Base on Panel C.

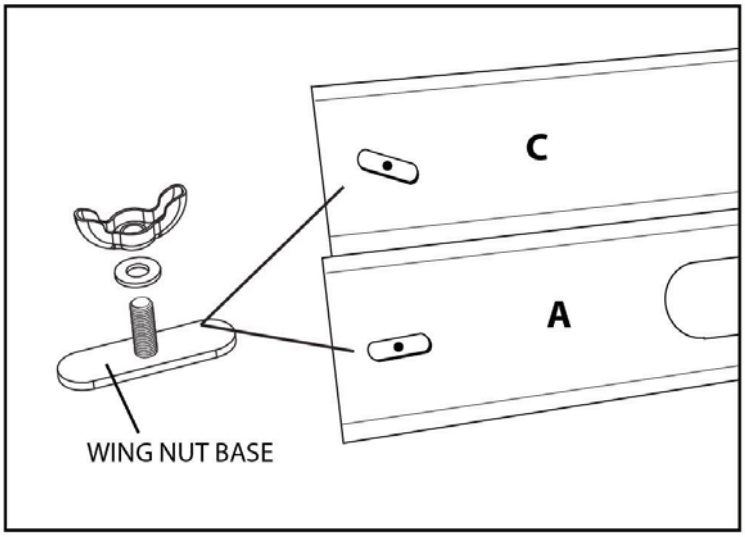

1. Loose the Wing Nut and the Wing Nut Base, screw Wing Nut into each of the small holes found on the Panel A and Panel C.

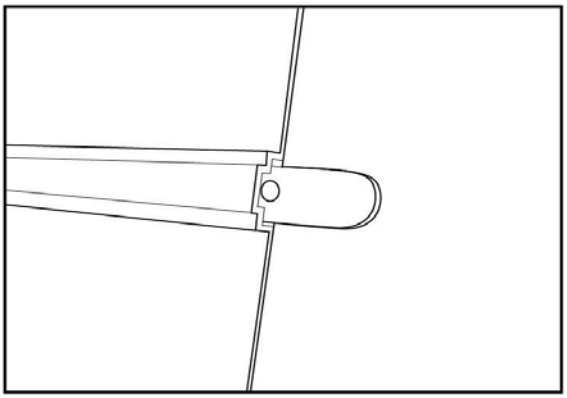

4. Connect Panel A and Panel C by placing the Panel B over the Wing Nut Base on Panel A.

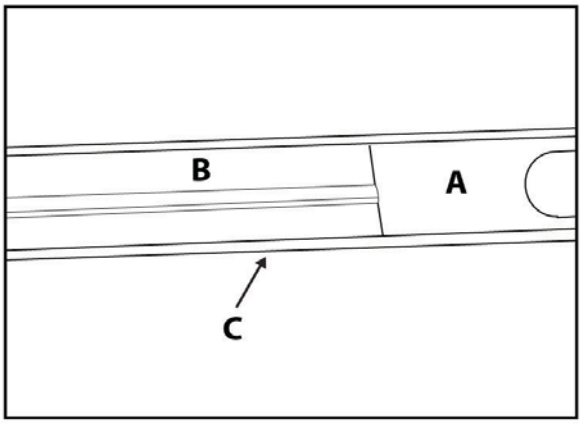

5. The Panel A & C Panel should now be connected using the Panel B.

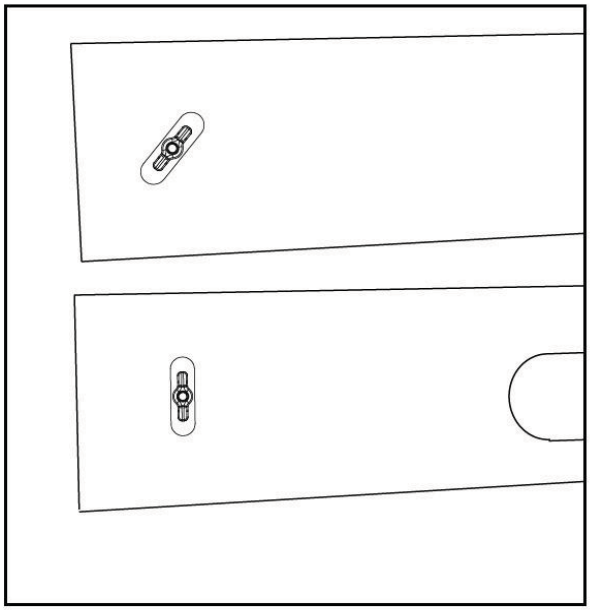

2. Tighten the Wing Nut with Wing Nut Base. DO NOT tighten the Wing Nuts all the way; make sure they are somewhat loose.

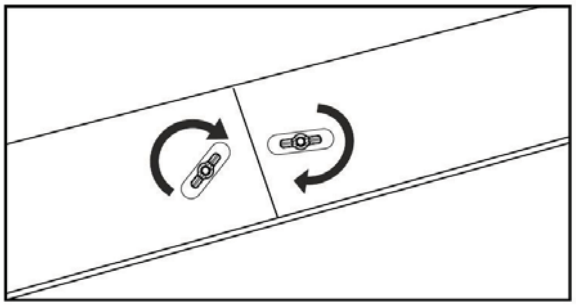

6. To complete the assembly, tighten the Wing Nuts installed earlier.

PORTABLE AIR CONDITIONER

The window venting kit must be installed in order for the unit to work correctly. The window venting kit has been designed to fit into most vertical and horizontal window openings and sliding glass doors up to 7 feet..

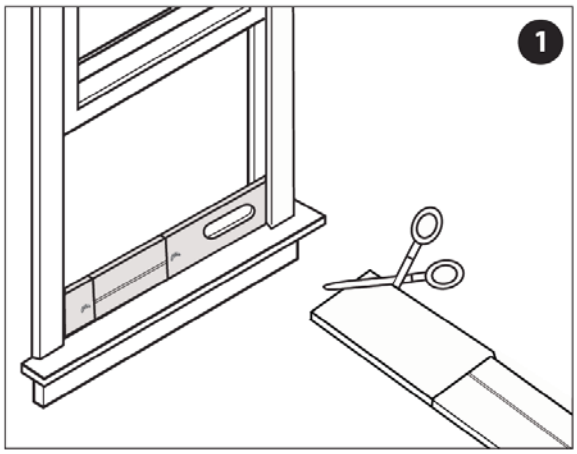

1. Open the window or door to adjust the length of the Window Kit Panels to fit the opening. If necessary, mark the kit and cut one end down to properly fit the opening.

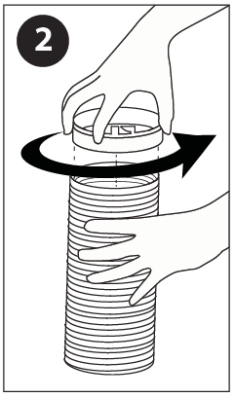

2. Twist the Exhaust Hose Connector onto Exhaust Hose.

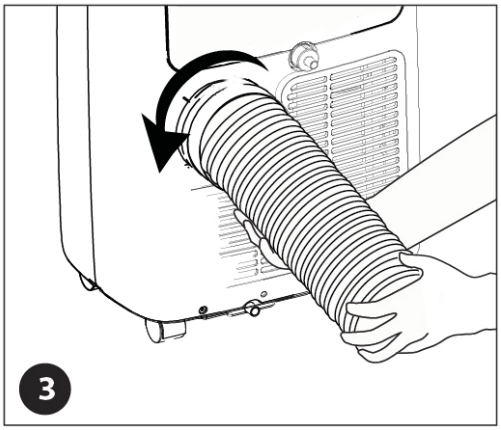

3. Twist the Exhaust Hose Connector over the discharge opening on the back of the unit and extend the Exhaust Hose. *(Keep the exhaust hose as short and straight as possible)*

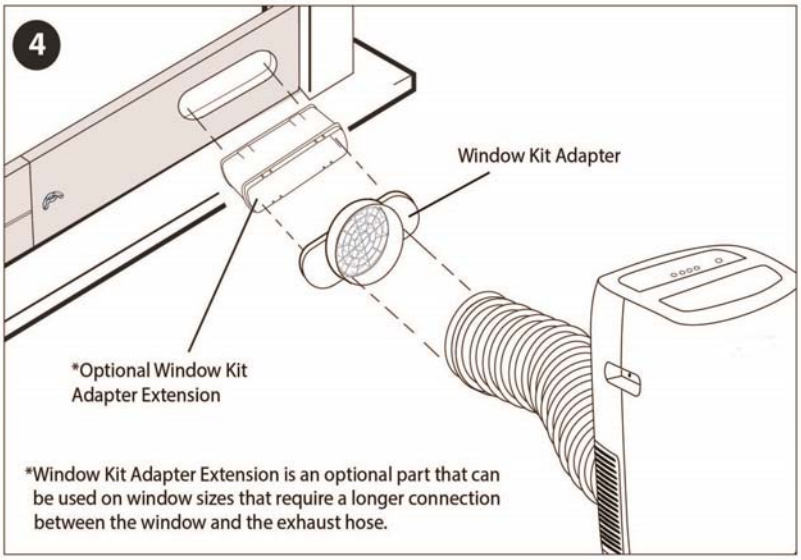

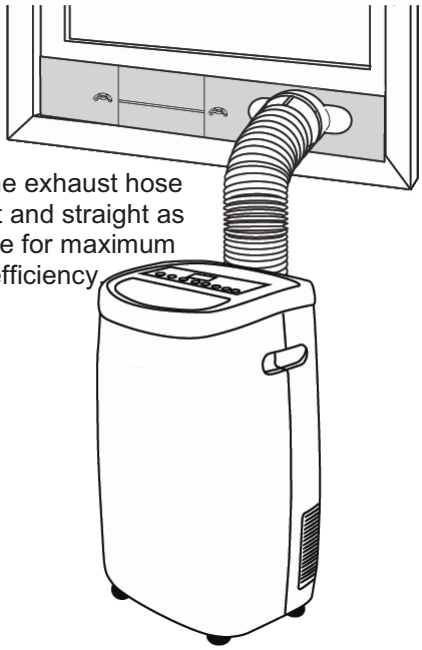

4. Attach the Exhaust Hose to the Window Kit Adapter. Now connect the Optional Window Kit Adapter Extension to the Window Kit Adapter. Then attach the Optional Window Kit Adapter Extension to

Optional Security Bracket Installation

Your Window Kit also includes an optional security bracket that can be installed to prevent the window from being opened from the outside while a Window Kit is installed.

Security Bracket

1 Type B Screw

Single and Double Hung Windows

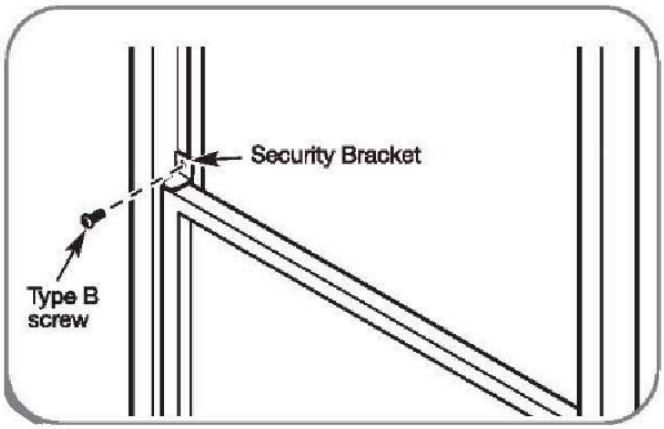

Install the security bracket with a type B screw as shown if you need.

Sliding Windows

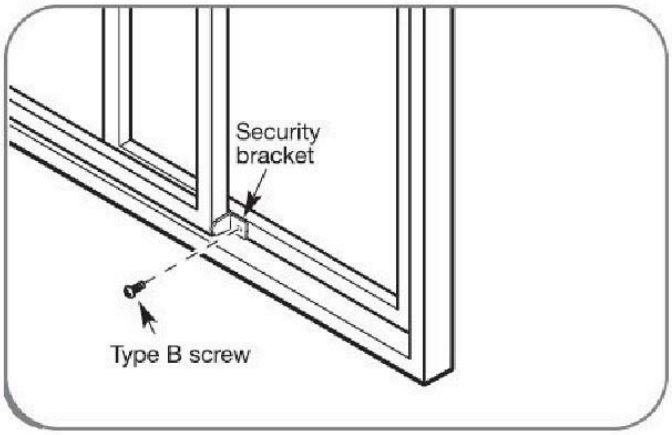

Install the window security bracket with a type B screw as shown.

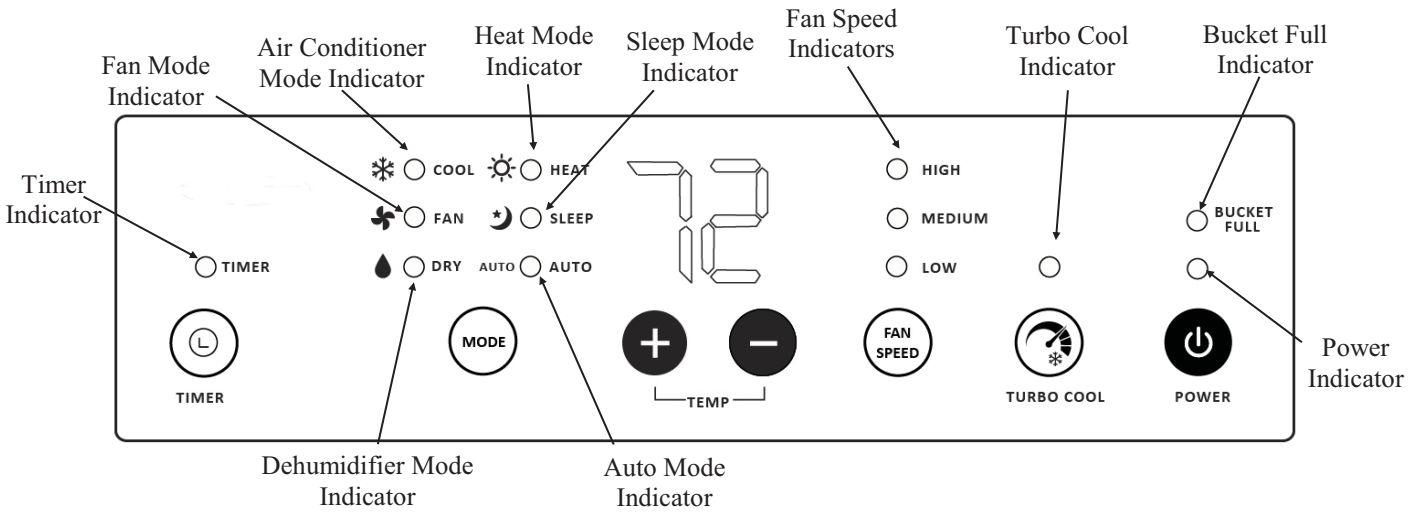

OPERATING INSTRUCTIONS FOR CONTROL PANEL BUTTONS

1) **Power On and Off** - Press the **POWER** button once to manually turn the unit on. Press the **POWER** button once more to turn the unit off.

2) **Mode Selection** - Press the **MODE** Button repeatedly to cycle between the different modes: Air Conditioner (Cool) mode, Fan-only mode, Dehumidifier (Dry) mode, Heat mode(cooling-only model without this mode), Sleep mode, and Auto mode. Each press of the MODE button will light up a different indicator on the control panel. The exhaust hose and window kit must be installed when the unit is in Air Conditioner, Heater, Dehumidifier mode, Auto mode, and Sleep mode. When using the unit as a fan, the window kit is not required.

3) **Temperature** - Select the desired temperature by pressing either the + or - button when using the unit in Air Conditioner or Heat mode. The temperature indicator flashes to display the desired temperature setting. After the temperature is set, the unit will display this temperature setting until it is changed by the user. The temperature indicator display shows temperature in Fahrenheit. While the unit is plugged in, but not powered on, press and hold the + and - buttons for 3 seconds to switch between Celsius and Fahrenheit.

4) **Fan Speed** - Press **FAN SPEED** button to choose fan speed in High, Medium or low.

5) **Timer -** Press **TIMER** button to set the unit automatically turn ON or OFF. Use the + and - buttons to program the hour increment.

6) **Turbo Cool -** When Turbo Cool is activated, the unit will cool at 61°F on fan high for 10 minutes and then return to the original settings.

7) **Bucket Full** - When the unit cannot evaporate the collected moisture fast enough, the excess water will collect in a backup water tank located inside the unit. The BUCKET FULL indicator will light up.

8) **Louver Direction** - This unit has 2-way directional louvers. Use the louver guides manually to direct air up and down.

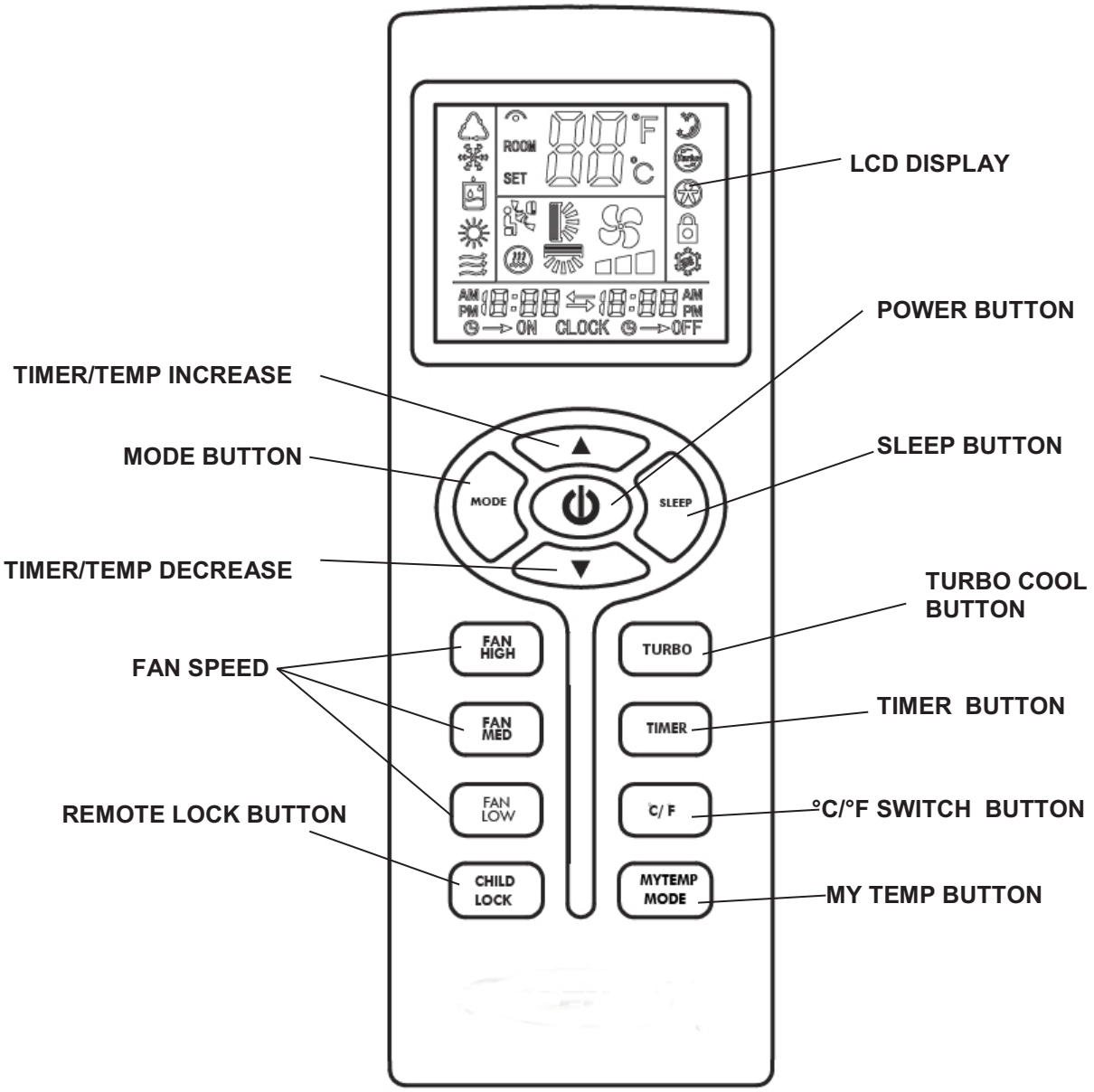
LCD DISPLAY
POWER BUTTON
TIMER/TEMP INCREASE
MODE BUTTON
SLEEP BUTTON
TIMER/TEMP DECREASE
TURBO COOL BUTTON
FAN SPEED
TIMER BUTTON
REMOTE LOCK BUTTON
°C/°F SWITCH BUTTON
MY TEMP BUTTON
ROOM
SET
°F
°C
AM
PM
ON
CLOCK
OFF
MODE
SLEEP
FAN HIGH
FAN MED
FAN LOW
CHILD LOCK
TURBO
TIMER
C/ F
MYTEMP MODE

1) **Power On and Off** - When the unit is plugged in, press the **POWER** ⏻ button to turn on the unit. Press the **POWER** button once more to turn the unit off. When in Air Conditioner mode, Heat mode, Auto mode, and Sleep mode, the selected temperature will appear on the remote control LCD display. When the unit is in Fan mode or Dehumidifier mode, no temperature will be displayed. This shows that temperature selection is not available when the unit is in Fan mode and Dehumidifier mode.

2) **Mode Selection** - Press the **MODE** Button repeatedly to cycle between the different modes: Auto, Sleep, Air Conditioner, Dehumidifier, Heat(cooling-only model without this mode), and Fan-Only mode. The mode icon on LCD display will light up showing which mode is selected.

3) **Fan Speed** - Press the **FAN HIGH, FAN MED, or FAN LOW** button to choose desired fan speed. When the unit is in Dehumidifier mode, the fan speed cannot be changed. When Turbo Cool is activated, fan speed is automatically set on high and is not adjustable in this mode.

4) **Temperature Setting** - When the unit is in Air Conditioner mode or Heat mode, you can select your desired temperature. Press the ▲ or ▼ to select your desired temperature setting. The temperature on the LCD display on the remote control will increase or decrease accordingly. Pressing the **°C /°F** button will switch the temperature select between °C and °F.

5) **SLEEP MODE** - When in air conditioning mode, press the **SLEEP** Button on the remote control, Sleep mode icon will show on the remote control LCD display. When in **SLEEP** mode, the fan will run on low to keep fan noise at a minimum. The temperature setting will gradually increase to 2°F above the original set temperature each of first 2 hours. The unit will keep operating the same temperature until the sleep mode is turned off.

6) **TIMER** -
Auto-On: Press the **TIMER** button when the unit is off to set up the Auto-on timer. The hour indicator on the LCD display will turn on. Press the **TIMER** button repeatedly to set timer within 1-24 hours.

Auto-Off: Press the **TIMER** button when the unit is On to set up the Auto-off timer. The hour indicator on the LCD display will turn on, Press the **TIMER** buttons to set timer within 1-24 hours. To cancel the timer, press the **TIMER** button until the timer mode is turned off.

7) **TURBO COOL** - Press the **Turbo Cool** button to activate Turbo Cool mode. The unit will cool at 61° F on fan high for 10 minutes and then return to the original settings. Fan speed is not adjustable in this mode.

NOTE: If Fan mode activates less than 3 minutes and switches to Turbo Cool, it will be a compressor protection shut down, compressor will turn on again until the 3 minutes is topped off. Switching from Heat or Auto mode to turbo cool is **not allowed** due to the protection of compressor.

8) **MY TEMP MODE** - Press this button to change the thermostat sensor from the air conditioner to the remote control location. The air conditioner will cool the area at the location and set temperature of the remote control.

9) **CHILD LOCK**– Press this button to lock/unlock the remote control buttons.

Air Conditioner Mode

1) Install the exhaust hose and window kit properly (see pages 3&4).
2) Plug the Power Cord into an electrical outlet.
3) Turn on the unit by pressing the **POWER** button.
4) Press the Mode button until the air conditioner mode indicator lights up on the control panel display.
5) Press the + or - until the desired room temperature appears on the control panel display. The temperature ranges from 61˚F - 88˚F.

6) Select the desired fan speed by pressing the **FAN SPEED** button.

NOTE: During hot days, the unit will cool the room most efficiently by setting the temperature at the lowest setting and the fan speed on high. Reducing the length of the exhaust duct, insulating the exhaust hose and window kit, and keeping direct sunlight to a minimum will also improve the cooling efficiency.

NOTE: **When the unit is running on air conditioning mode, the exhaust hose is required and must be vented outside using the supplied window kit.**

Heat Mode(cooling-only model without this mode)

1) Install the exhaust hose and window kit properly (see pages 3&4).
2) Plug the Power Cord into an electrical outlet.
3) Turn on the unit by pressing the **POWER** button.
4) Press the Mode button until the heat mode indicator lights up on the control panel display.
5) Press the + or - until the desired room temperature appears on the control panel display. The temperature ranges from 61˚F - 88˚F.

6) Select the desired fan speed by pressing the **FAN SPEED** button.

NOTE: **When the unit is running on Heat mode, the exhaust hose is required and must be vented outside using the supplied window kit.**

NOTE: **Switching from Heat mode to Turbo cool is not allowed due to the protection of compressor.**

Dehumidifier Mode

1) Install the exhaust hose and window kit properly (see pages 3&4).
2) Plug the Power Cord into an electrical outlet.
3) Turn on the unit by pressing the **POWER** Button.
4) Press the **MODE** button until the dehumidifier mode indicator lights up on the control panel display.
5) Temperature indicator displays room temperature

NOTE: The unit operates at low fan speed during dehumidifier mode. The unit cools room slightly during the dehumidification process. Keep the windows and doors closed to aid the effectiveness of the unit in removing the moisture from the room.

NOTE: **When the unit is running on dehumidifier mode, the exhaust hose is required and must be vented outside using the supplied window kit.**

NOTE: The unit will not perform in dehumidifier mode when the room temperature is lower than 50˚F .

Auto Mode

1) Install the exhaust hose and window kit properly (see pages 3&4).
2) Plug the Power Cord into an electrical outlet.
3) Turn on the unit by pressing the **POWER** button.
4) Press the **MODE** button until the Auto mode indicator lights up on the control panel display.

Auto Mode will operate the unit in air conditioning mode when the temperature is above 72 degrees, Fan mode when the temperature is below 72 degrees, and heating mode when the temperature is below 68 degrees.

NOTE: **Switching from Auto mode to Turbo cool is not allowed due to the protection of compressor.**

Sleep Mode

1) Install the exhaust hose and window kit properly (see pages 3&4).
2) Plug the Power Cord into an electrical outlet.
3) Turn on the unit by pressing the **POWER** button on the control panel.
4) Press the **MODE** button until the sleep mode indicator lights up on the control panel display.

NOTE: When in **SLEEP** mode, the fan will run on low to keep fan noise at a minimum. The temperature setting will gradually increase to 2°F above the original set temperature each of first 2 hours. The unit will keep operating the same temperature until the sleep mode is turned off.

Fan Mode

1) Plug the Power Cord into an electrical outlet.
2) Turn on the unit by pressing the **POWER** button on the control panel.
3) Press the **MODE** button until the fan mode indicator lights up on the control panel display.
4) Select the fan speed by pressing the **FAN SPEED** button.

NOTE: It is not necessary for the exhaust hose and window kit to be installed to operate the unit in fan mode.

BUCKET FULL INDICATOR

When the Internal Water Tank is full, the Bucket Full light will illuminate and the unit will automatically shut down. The air conditioner will resume normal operation once Internal Water Tank is emptied.

INTERNAL WATER TANK

When the room temperature is low and the indoor humidity is high, the air conditioner may not be able to evaporate some of the moisture fast enough. When this happens, the water will accumulate in an internal water tank inside the unit. The internal water tank holds approximately 1.5 liters of water. When this tanks becomes full, the unit will automatically shutdown and illuminate the Bucket Full indicator.

HOW TO INSTALL CONTINUOUS DRAIN OPTION:

1. Place the Portable AC on a level surface.
2. Remove the cap on continuous drain port on the back of the unit to access the Continuous Drain Port.
3. Thread a garden hose (not supplied) onto the accessible Continuous Drain Port.
4. Lead Garden Hose to a floor drain and cut to length.
5. Make sure that there are no kinks or knots in the garden hose (Fig 15.1).
6. Turn on the unit and gravity draining will begin automatically.

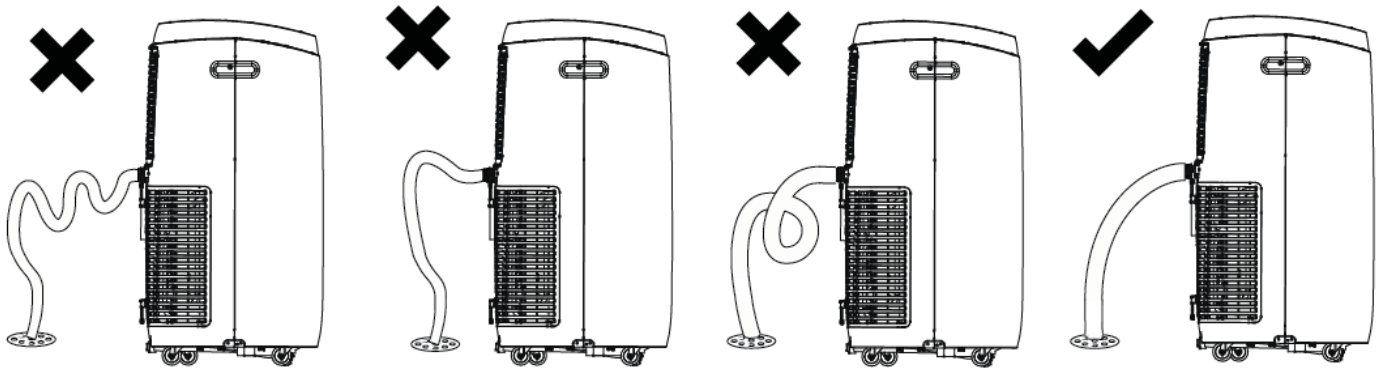

Fig 15.1

HOW TO DRAIN THE INTERNAL WATER TANK

*You will need a small pan, approximately 1” high to catch the water coming out of the water tank. Once the water tank is empty, the unit will resume operation within a few minutes.

1. Do not move the unit when the water container is full. (Water will spill out)
2. Place a small pan under the condensation drain hole on the bottom side of the unit.
3. Remove the drain plug from the condensation drain hole. The condensate water will drain out automatically.
4. When the drain pan is full, install the drain plug back onto the condensation drain hole to stop the water flow.
5. Empty the drain pan.
6. Repeat steps 2-5 until all the water is emptied.

NOTE: Once the condensate tank has been emptied, firmly press the drain plug back onto the condensation drain hole (Fig 16.1). It is not advised to use continuous drainage when the room temperature is higher than 90˚F.

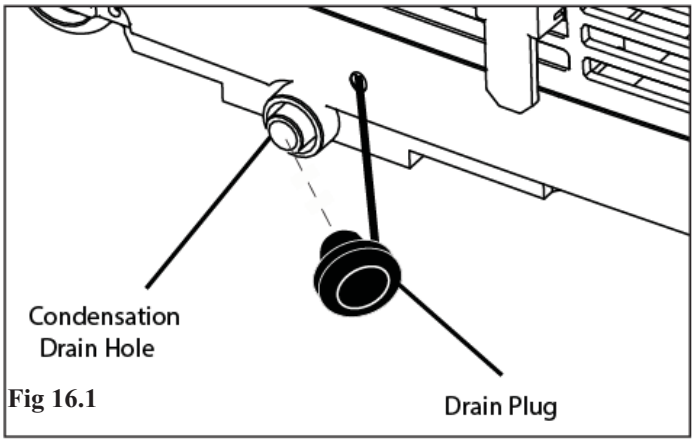

Fig 16.1

NOTE: You may also use enclosed Optional Drain Tube to facilitate the draining process, make sure to replug the Drain Stopper once the condensation tank has been emptied (Fig 16.2).

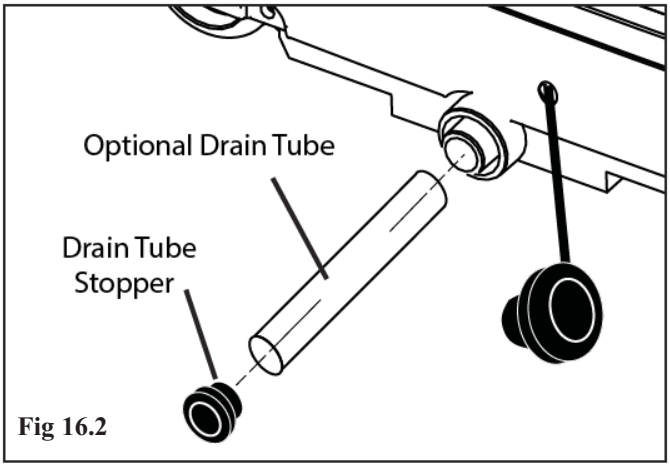

Fig 16.2

NOTE: Make sure power is off and the power cord is not plugged into an electrical outlet prior to performing any maintenance on the unit

Clean or replace filter - If the air filter is blocked with a dust, the airflow volume may reduce. It is recommended to clean the filter once every two weeks or as needed.

1) Remove the filter from the filter compartment on the back of the unit.
2) Wash the air filter by immersing it gently into warm water with a neutral detergent. Rinse the filter and dry it thoroughly out of sunlight.
3) Slide the filter back into the filter compartment after it is thoroughly dried.
4) If the filter is torn or unusable, order a new filter by calling the customer service number on the warranty page of this manual.

Clean the unit Housing

1) Keep the unit from being exposed directly to the sun to prevent color fading.
2) Clean the surface with a damp cloth and dry it with a soft towel.

Storing the Unit for an Extended Period of Time or Transporting the unit

1) Empty any excess water by unplugging the drain plug in the back of the unit (located at the bottom).
2) Unplug the unit.
3) The unit should be stored in a cool dry place.

TROUBLESHOOTING

PROBLEM	CAUSE	SOLUTION
Air conditioner does not power on	• Unit is not plugged in • No electric current to outlet • Internal safety device has tripped	• Plug unit in. • Check electric breaker box for a trip • Wait 30 minutes for safety device to reset
Air conditioner works for a limited amount of time	• There are bends in the exhaust hose • Something is blocking the air from being discharged	• Position the air exhaust hose correctly, keeping it as short and free of curves as possible • Check and remove anything obstructing air discharge
During operation, there is an unpleasant smell in the room	• Air filter is dirty	• Remove air filters, clean and re-install
Air conditioner does not operate after restarting the unit	• The internal compressor safety device prevents the unit from being restarted until three minutes have elapsed since it was last turned off	• Wait for compressor to turn on
The control panel display shows Error codes	• The unit has a self diagnosis system to identify a number of malfunctions	• See page 19 Self-Diagnosis

FCC Caution.

This device complies with part 15 of the FCC Rules. Operation is subject to the following two conditions: (1) This device may not cause harmful interference, and (2) this device must accept any interference received, including interference that may cause undesired operation.

Any Changes or modifications not expressly approved by the party responsible for compliance could void the user's authority to operate the equipment.

Note: This equipment has been tested and found to comply with the limits for a Class B digital device, pursuant to part 15 of the FCC Rules. These limits are designed to provide reasonable protection against harmful interference in a residential installation. This equipment generates uses and can radiate radio frequency energy and, if not installed and used in accordance with the instructions, may cause harmful interference to radio communications. However, there is no guarantee that interference will not occur in a particular installation. If this equipment does cause harmful interference to radio or television reception, which can be determined by turning the equipment off and on, the user is encouraged to try to correct the interference by one or more of the following measures:

-Reorient or relocate the receiving antenna.

-Increase the separation between the equipment and receiver.

-Connect the equipment into an outlet on a circuit different from that to which the receiver is connected.

-Consult the dealer or an experienced radio/TV technician for help.

This equipment complies with FCC radiation exposure limits set forth for an uncontrolled environment. This equipment should be installed and operated with minimum distance 20cm between the radiator & your body.