digital video camera

HD-480

user manual

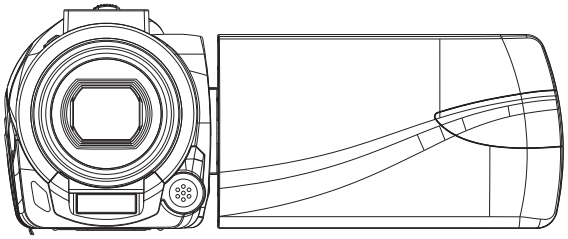

Please read the manual carefully before use

Content

1. About 1

1.1System Requirement.....1

1.2Camera display.....1

1.3Function Introduction of Related Key 2

2.Start to use.....2

3.Use the camera.....8

4.Appendix.....15

4.1Technical Specification.....15

4.2Common Problem and Solution.....15

1. About

1.1System Requirement

The minimum configuration of the computer switch connected with the machine as follows:
Pentium processor of 2.0 GHz or higher/ Windows XP
system or higher/2GBmemory/available disk space of 40 GB and standard USB interface/
CD ROM driver/IGB display card or higher/Screen resolution of 1024 X 768 pixel or higher

1.2Camera Display

【Front side view】

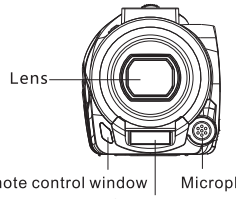

【Back side view】

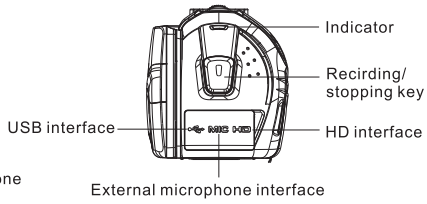

【Back side view】

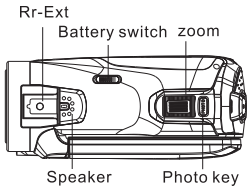

【Bottom side View】

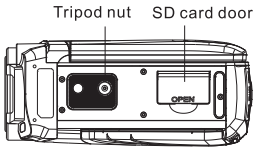

【Left side view】

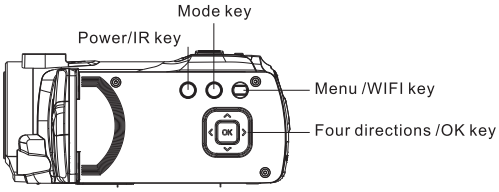

1.3 Function Introduction of Related Key

Image	Button Name	Function Introductions
POWER/IR	Power key	Long press to open / close power, short press to open / close IR lamp.
MODE	Mode key	Switch camera / photo / playback / setting mode stand for the camera mode, stand for camera mode , stand for playback mode, "setting" stand for setting mode.
MENU	Menu Key	In each mode: Press to bring up the control menu, Long press 3 seconds to open WIFI, short press to turn off WIFI.
OK	Four directions and OK Key	Four directions: Up, Down, Left and Right. Press the OK key to confirm.
ZOOM W/T	Zoom key	In photo shotting/video recording mode, it's for zoom in/out. In playback mode, it's for shrink/amplify or move photo in photo playing mode.
PHOTO	Photo Key	In photo shooting mode, press the key to take photos.
	Rec/Stop Key	To stop/Record video in video recording mode.

2.Start to use

2.1 Install in memory card

Install memory card in order to store more photos, videos or other documents. When the batter has lower electric quantity or is exchanged, not lose the media document in the memory card. Install the memory car according to the following steps:

1.Open the screen panel and push and open the cover according to the picture.
2.Confirm the metal contact of the memory card to insert and push downw-ards until to sound;when the memory card is exactly inst-ailed, smoothly close the door.
3.Press the cover according to the graph and push the cover inwards and tightly clamp.

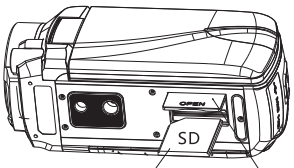

Attention!
Please formating memory card before use, do not take out the memory card whenRecording,otherwise,it will damage memory card or cause date lose!Please check the compatibility of the memory card before use.

1.Open the SD card door (Turn up to open the SD card door, flip down to close the SD card door)

2. By pictorial method(Metal contact points) Insert the SD card

2. Start to use

Attention!
Please install the battery correctly, otherwise it will damage the camera or cause accident! do not use non-standard charger!the power of adapter for the camera is:
AC 100V-240V/50-60HZ!

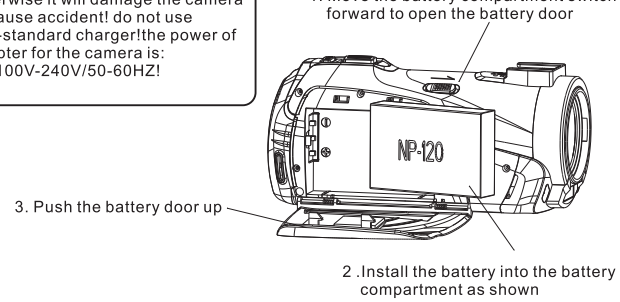

2.2 Install battery
Install the matched lithium battery in the battery cabin according to the direction in picture
1.Push the battery into the battery compartment as shown,pay attention to the lithium battery and the battery compartment positive and negative identification
2.Close the battery cover you will hear a sound of "click".

2.3 Charge the battery
Install the battery in the machine properly; connect the charger via one end of the matched USB wire in standard way. You may also charge it with connecting the computer.

2.4 Turn on/off the camera
Press long the 【Power Key】, you can turn on the the machine. In power-on state long press【Power Key】, you can turn it off.
This machine supports on / off screen and automatic on / off. That is, in the shutdown state, open the display panel, the machine will automatically boot, close the display panel, the machine will automatically shut down,if the power of battery is exhausted, “low power” will show on the screen and will turn off in seconds

2.5 Exchanging mode
Press 【Mode Key】 to change different mode options among video recording mode, photo shooting mode,playback mode, and it will be showing on the top left corner of the screen.

2.6 Instructions on the use of the remote control (optional accessories)

2.6.1The machine besides can use keystrokes, you can also use the remote control equipped with remote control:

1.Photo shooting key: Photo shooting in photo mode
2.Rec. Key : Record /stop recording in video mode
3.IR light key: Turn the IR light / off
4.Page right key: Turn the file right in all modes
5.Page left key: Turn the file left in all modes
6.Enter: Confirm the function
7.Mode key: Switch between modes(Video mode /Photo shooting mode /Playback mode / Setting mode)
8.Delete key: Quickly delete files in playback mode
9.Zoom in key: In video mode / Photo shooting mode ,Zoom in function,Page up function in menu page
10.Zoom out key: In video mode /Photo shooting mode ,Zoom out function ,Page down function in menu page
11. Playback key Enter playback mode

2.6.2Before use, remove the film on the bottom of the remote control.Please replace the film when not in use to save the battery.

2.6.3Align the launch window of the remote control with the machine receive window ,the middle can not be obstructed by opaque objects .

2.6.4Remote control Key function as shown on the right image

2.6.5 Receiver window as shown below

Remote controller Key sketch map

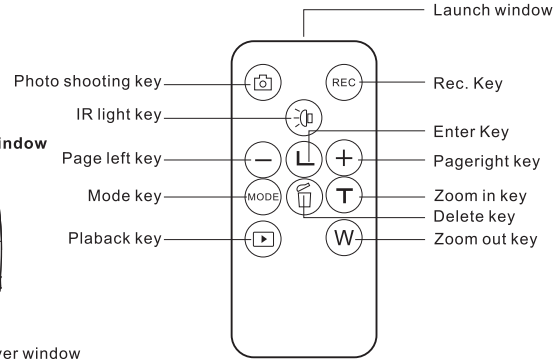

Image of receiver window

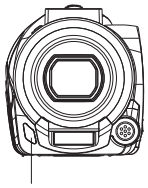

Remote control receiver window

2.7 Connect to computer

Help you to connect the machine to the computer in order to transmit the document, watch and edit the video and the photo; see the picture.

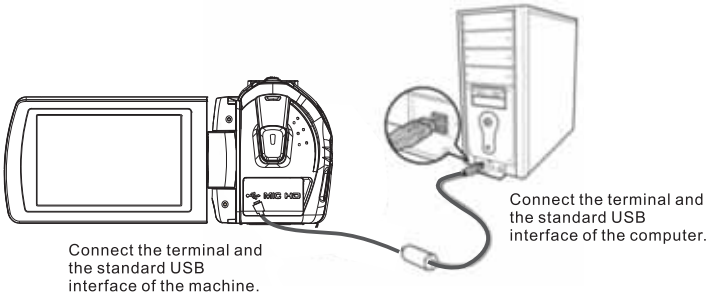

2.8 Connect to standard television

As shown, the camera can be connected to a TV Set, to display video or photo file

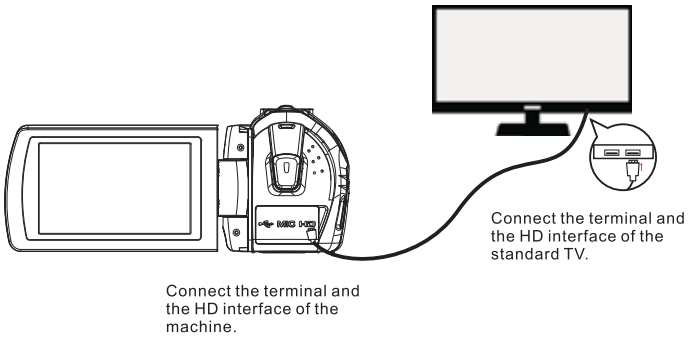

2.9 Use an external microphone(optional accessories)

1.This machine supports external microphones ,Can effectively reduce the picked up ambient noise ,improve video quality to give users a better audio experience. Please read carefully before using the external microphone about its characteristic, technical parameters, functional operation,Instructions and dos and don't for avoiding damaging to the machine.

2.Install the external microphone in this direction on the camera and lock the card nut.

3.Insert the 3.5mm plug of the external microphone into the MIC hole of the camera,and turn on the microphone switch.

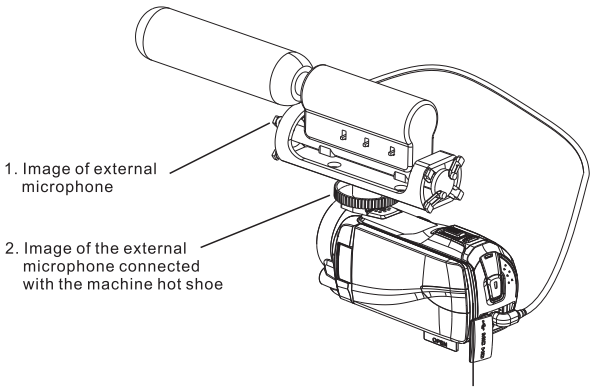

2. Start to use

The chapter assist you to be familiar with this machine

2.10 Video Recording mode

Shoot video clip according to the video mode and store in the internal memory or memory card. The meaning of icon in video recording mode as show:

1.REC.Mode indicator	4.Scene mode indicator	7.Memory card indicator
2.Image quality indicator	5.Frame indicator	8.Battery indicator
3.Exposure indicator	6. Rec. time indicator	9.IR light indicator

2.11 Photo shooting mode

Shoot photos according to the photo mode and store in the internal memory or memory card. Press【Mode Key】on switch into photo mode.

1. Shooting mode indicator	5.Image quality indicator	9.Battery indicator
2.White balance indicator	6.Image quality indicator	10.IR light indicator
3.Metering mode indicator	7.Number of available photo indicator	
4.Exposure indicator	8.Memory card indicator	

2.12 Zoom function
The camera with zoom function, zoom in by sliding the【Zoom Key 】to right side. Zoom out by sliding the 【Zoom Key】 to left side.

2.13 Use the IR light
The camera built-in IR light, it can make light compensating in a dark environment. In video recording or photo shooting mode, press the 【Power Key】 to turn on/off the light, the icon will show on the screen. The machine enters night vision mode. At this point, the picture is black and white, the pictures or video shot is also black and white. Tap the 【Power Key】 again to return to normal mode.

Attention!
the IR light mode can be worked in photo shooting / video shooting mode, the operation way are the same zoom function can be worked in photo shooting / video shooting mode, the operation way are the same.

3. Use the camera
This chapter will assist you to understand how to use the all kinds of advanced function of the camera.

3.1 Photo shooting
The chapter introduces to shoot photos. Turn on the camera, press 【Mode Key】to switch into photo shooting mode.
1.The image displayed on the screen chooses and adjusts the target to be shot.
2.Hold the machine and press the 【Shooting Key】to shoot the photo.
3.Display the number of the photos shout in each resolution ratio on the top right corner of the screen.
4.“No card” will show on the screen when the screen if there’s no SD card in the camera, “Card full”will show on the screen when the SD card is full, user need to replace another card to continue shooting photos.
5. The number of the shooting number is decided by the volume of the SD memory card and the chosen resolution ratio; the more the photo quality, the more occupied memory. In photo shooting mode, setting the relative parameters before photo shooting, the setting method as follow:

3.1.1 Photo size settings
Photo resolution can be set by the item. The photo quality is better if the size is lager.
1. In photo shooting mode. Press 【Menu Key】to call out menu. Press 【UP/Down Key】 to choose “Resolution” menu.
2. Press 【OK Key】 to enter sub menu.
3. Press 【UP/Down Key】to choose the photo size that you need:2M/3M/5M/7M/8M/10M/12M/16M/20M/24M. Press 【OK Key】to save and back to photo size mode.

3.1.2 Photo quality settings
The function can set the quality of the shot photo, the photo is more clear if the quality is better.
1. Press the 【Menu Key】 to call out the menu option in the shooting mode.
Press 【UP/Down Key】to choose the “Photo Quality” option.
2. Press 【OK Key】 to enter sub menu.
3. Press 【UP/Down Key】 to choose : “Soft/Normal/Sharp/Cancel”, press【OK Key】to save and back to photo shooting mode.

3.1.3 Metering function

This function can meter the mode you need in any environment

1. Press the【Menu Key】to call out the menu option in the shooting mode.
   Press【UP/Down Key】to choose the “Metering” option.
2. Press【OK Key】to enter sub menu.
3. Press【UP/Down Key】to choose: Center/ Multi/ Spot, press【OK Key】to save and back to photo metering mode.

3.1.4 White Balance Settings

This function can adjust the color deviation of the shot photo according to the different liquid source conditions.

1.In photo shooting mode, press【Menu Key】to call out menu, press【UP/Down Key】to select “White Balance” menu.
2.Press 【OK Key】to enter sub menu.
3.Press 【UP/Down Key】to select: Auto/Daylight/ Cloudy/ Tungsten/ Fluorescent(H)/ Fluorescent(L), press 【OK Key】to save and back to White Balance Settings mode.

3.1.5 Adjust the photosensibility (ISO)

Adjust the photosensibility via the function and recommend using the automatic mode.

1. Press the 【Menu Key】to call out the menu option in the shooting mode.
   Press【UP/Down Key】to choose: Auto/100/200/400 from the menu, press【OK Key】to enter sub menu.
2. Press【OK Key】to enter sub menu.
3. Press page【UP/Down Key】to choose: Auto 50//100/200/400 from the menu,
   Press 【OK Key】to save and back to photo ISO mode.

3.1.6Exposure settings (adjust EV value)

Permit the user adjust the exposure of shooting according to the expos-ure condition.
Be attention that if the environment is too dark, this function is invalid.

1. Press the【Menu Key】to bring up the menu option at the shooting mode.
   Roll【UP/Down Key】to choose the exposure option.
2. Press【OK Key】to enter sub menu.
3. Press【UP/Down Key】to choose the required exposure value from the appeared menu: EV value from +2 to -2. Press【OK Key】to save and back to photo exposure mode.

3.1.7 Photo shooting mode settings

User can set the selfie mode by the item.

1. Press the 【Menu Key】to call put the menu option in the shooting mode.
   Press【UP/Down Key】to choose the “shooting mode” option.
2. Press【OK Key】to enter sub menu.
3. Press【UP/Down Key】to choose : off/ selfie2s/ selfie10s/ that you need, press【OK Key】to save and back to selfie mode.

3.1.8 Continuous shooting settings

This function permits the user to set the number of the continuous shooting photo for having a perfect one.

1.Press the【Menu Key】to call out the menu option in the shooting mode.
Press【UP/Down Key】to choose the “continuous shooting” option.
2.Press 【OK Key】 to enter sub menu.
3.Press【UP/Down Key】to choose: off/3 /5 /10, press【OK Key】to save and back to Continuous shooting mode.

3.1.9 Sharpness settings

This function permits the user to adjust the sharpness of the photo so that the edge is clearer or softer

1.Press the【Menu Key】to call out the menu option in the shooting mode.
Press【Right/Left Key】to choose the “Sharpness” option.
2.Press【OK Key】to enter sub menu.
3.Press【UP/Down Key】to choose: “super/ good / Normal”, press【OK Key】to save and back to Sharpness mode.

3.1.10 Special effects settings

This function permits the user to set the photo effect that you need.

1.Press the 【Menu Key】 to call out the menu option in the shooting mode.
Press【UP/Down Key】to choose the “Special effects” option.
2.Press【OK Key】to enter sub menu.
3.Press【UP/Down Key】to choose: normal/ black and white/ age/ negative/ red/ green/blue.
Press【OK Key】to save and back to special effects mode.

3.1.11 Date stamp

The date and time can be marked on the shot photo by the item

1.Press the【Menu Key】to call out the menu option in the shooting mode.
Press【UP/Down Key】to choose the “Date Mark” option.
2.Press【OK Key】to enter sub menu.
3.Press【UP/Down】Keyto choose: Off/Date/ Date & Time, press【OK Key】to save and back to Date Mark mode.

3.2 Shoot video

This chapter introduces how to use the machine to shoot the video clip. Revolve the mode dial to video mode; the icon appear on the top right corner of the display screen.

1.Refer to the photo displayed on the screen to choose and adjust the target to be shot, hold the machine and press 【Rec. /Stop key 】to start recording.
2.In the process of recording, above the red circle icon flash screen. Now press the【OK Key】can pause/ shoot, press【Rec. /Stop key】can stop filming.
3.The recorded files will auto save in the machine or the memory card.

3.2.1 Video size settings

This machine has many size of video, the users can choose the best size for your own.

1.Press the【Menu Key】to call out the menu option in the video shooting mode.
Press【UP/DownKey】to choose the “video size” option.
2.Press【OK Key】to enter sub menu.
3.Press【UP/Down Key】to choose:
1080p(30fps)/720p(60fps)/720p(30fps)/640x480(60fps). Press【OK Key】to save and back to video size mode.

3.2.2 Photo quality settings

This machine permits the users to choose different quality video, the better the quality is, the clearer the video will be.

1.In video shooting mode, press【Menu Key】to call out menu, press【UP/Down Key】 to select “Photo quality” menu.
2.Press【OK Key】to enter sub menu.
3.Press【UP/Down Key】to select: super/good/normal. Press【OK Key】to save and back to Photo quality mode.

3.2.3 Screen saver settings

This machine can set the screen saver, the users can choose the preferring time to start protecting.

1.In video shooting mode, press【Menu Key】to call out menu, press【UP/Down Key】 to select “screen saver”menu.
2.Press【OK Key】to enter sub menu.
3.Press【UP/Down Key】to select: off / 1 min / 3 mins / 5 mins. Press【OK Key】to save and back to screen saver mode.

3.2.4 White Balance Settings

This function can adjust the color deviation of the shot photo according to the different liquid source conditions.

1.In video shooting mode, press【Menu Key】to call out menu, press【UP/Down Key】 to select” White Balance” menu.
2.Press【OK Key】to enter sub menu.
3.Press【UP/Down Key】to select: Auto/Daylight/Cloudy/ Fluorescent (H)/Fluorescent(L)/, Press【OK Key】to save and back to White Balance Settings mode.

3.2.5 Exposure settings (adjust EV value)

Permit the user adjust the exposure of shooting according to the expos-ure condition.
Be attention that if the environment is too dark, this function is invalid.

1. Press the【Menu Key】to bring up the menu option in video shooting mode. Roll【UP/Down Key】to choose the exposure option.
2. Press【OK Key】to enter sub menu.
3. Press【UP/Down Key】to choose the required exposure value from the appeared menu: EV value from +2 to -2.Press【OK Key】to save and back to photo exposure mode.

3.2.6 Metering function

This function can meter the mode you need in any environment

1.Press the【Menu Key】to call out the menu option in video shooting mode. Press【UP/Down Key】to choose the “Metering” option.
2.Press【OK Key】to enter sub menu.
3.Press【UP/Down Key】to choose: Center/ Multi/ Spot, press【OK Key】to save and back to photo metering mode.

3.2.7 Special effects settings

This function permits the user to set the photo effect that you need.

1.Press the【Menu Key】to call out the menu option in video shooting mode. Press【UP/Down Key】to choose the “Special effects” option.
2.Press【OK Key】to enter sub menu.
3.Press【UP/Down Key】to choose: normal/ black and white/ age/ negative/ red/ green/blue. Press【OK Key】to save and back to special effects mode.

3.3 Playback mode
Play back the photo or watch the video on the machine at the shooting or video mode. Protect, revolve, delete and use PictBridge interface to print the photo from the machine: protect and delete the video document.

3.3.1 Play back the photo and related operation
You may do in play back preview photo mode:
1. In play back preview photo mode: press left【W key 】to enter the nine character preview mode
2. In play back/ nine character preview photo mode:【Four directions Key】press left/right/up/ down to move the pictures or video document.
3. In play back preview photo mode: press left 【T Key 】to zoom in the photo and 【W key】 to zoom out the photo.
4. In play back preview photo mode: press the【OK Key】to choose a document.

3.3.1.1 Protect(The photo being protected can't be deleted unless being free from protect mode)
This function can protect the photos don't be accidentally deleted.
1. Press the【Menu Key】to call out the menu option in the playback mode, Press【UP/Down Key】to choose "Protect" option. Press【OK Key】to enter sub menu.
2. Press【UP/Down Key】to choose: lock this/ unlock this/ lock all/ unlock all.
3. Press【OK Key】to confirm operation and back to the Protect mode.

3.3.1.2 Delete
This function deletes one photo or deletes all photos on time.
1. Press the【Menu Key】to call out the menu option in the playback mode, press 【UP/Down Key】to choose the "Delete" option. Press【OK Key】to enter sub menu.
2. Press【UP/Down Key】to choose: this image/all
3. Press【OK Key】to confirm operation and back to the delete mode.

3.3.1.3 Slide
This function can play the photos in slide mode by automatic playback
1. Press the 【Menu Key】to call put the menu option in the playback mode, Press【UP/Down Key】to choose the "slide" option. Press【OK Key】to enter sub menu.
2. Press【UP/Down Key】to choose: begin/interval / repeat (interval / repeat), Press【Four directions key】to switch the sub mode, press【OK Key】to save and confirm then back to the slide mode.
3. During the slide, press the【Photo shooting key】to pause/on,【Video shooting key】 to cancel.

3.3.2 Play video and related operation
All recording video files can be reviewed, deleted and protected on the camera.
1. Press【Four directions key】to select the video files that need to be displayed in the playback mode.
2. Press【REC./ Stop key】to play in the playback mode.
3. Press【Photo shooting key】to pause/continue playing in the playback mode.
4. Press【left/right key】to fast forward / rewind playing in the playback mode.

3.3.2.1 Protect (To protect the video files from deleting by accident.)

1. Press the【Menu Key】to call out the menu option in the play back mode, Press【UP/Down Key】to choose “Protect” option. Press【OK Key】to enter sub menu.
2. Press【UP/Down Key】to choose: lock this/ unlock this/ lock all/ unlock all.
3. Press【OK Key】to confirm operation with pressing the【OK Key】and back to the Protect mode.

3.3.2.2 Delete (This function deletes one photo or deletes all photos on time.)

1. Press the【Menu Key】to call out the menu option in the playback mode, Press【UP/Down Key】to choose the “Delete” option. Press【OK Key】to enter sub menu.
2. Press【UP/Down Key】to choose: this image/all
3. Press【OK Key】to confirm operation and back to the menu mode.

3.4 Menu settings

User can set the language, date/ time, frequency, format for the camera in the menu. Wake up this machine and press【Mode Key】to “settings mode”, and the menu function is described below.

3.4.1 Language settings

This camera support multi language, user can choose your language

1. Press the【Menu Key】to call out the menu option in the settings mode. Press【UP/DownKey】to chose the “setup” option. Press【OK Key】to enter sub menu.
2. Press【UP/Down Key】to choose “Language” option, press【UP/Down Key】to choose the language you need and press【OK Key】to save then back to language mode.

3.4.2 Beep settings

This function can set all kind of operation prompt voice of the machine.

1. Press the【Menu Key】to call out the menu option in the settings mode. Press【UP/Down Key】to chose the “Beep settings” option. Press【OK Key】to enter sub menu.
2. Press【UP/Down Key】to choose “Language” option, press【Four directions key】to choose the voice you need and press【OK Key】to save then back to voice mode.

3.4.3 Power frequency settings

This setting can avoid the flicker during a shooting in a light environment, please refer to local power standard.

1. Press【UP/Down Key】to choose “power frequency” option in setting mode, Press【OK Key】to enter sub menu.
2. Press【UP/Down Key】to choose a preferring frequency: 50Hz/60Hz, press【OK Key】to save and back to the power frequency menu.

3.4.4 Auto power off settings

Automatically power off to save the power supply before use according to the function.

1. Press【UP/Down Key】to choose “Auto power off” option in setting mode, Press【OK Key】to enter sub menu.
2. Press【UP/Down Key】to choose a off time: off/1 min/ 3mins / 5mins, press【OK Key】to save and back to the Auto power off menu.

3.4.5 Date and time settings

This function permits the users to set the date and time.

1. Press【UP/Down Key】to choose the “Date and time” menu, press【OK Key】to enter the sub menu.
2. Press the【Four directions Key】to adjust, press【OK Key】to confirm and save the back to the date and time setting mode.

3.4.6 TV output settings

To set a compatible TV output mode when connecting the camera with TV set

1. Press【UP/Down Key】to choose the “TV output” menu, press【OK Key】to enter the sub menu.
2. Press【UP/Down Key】to choose: NTSC/PAL, press【OK Key】to confirm and save the back to the TV output mode.

3.4.7 Format function

This function can be formatted the machine and memory card, delete date in the machines and any documents in memory. Be attention, once the document is deleted, there is no chance to find it back.

1. Press【UP/Down Key】to choose the “format ” menu, press【OK Key】to enter the sub menu.
2. Press【UP/Down Key】to confirm, press【OK Key】to confirm and save the back to the format mode.

3.4.8 Reset

When this machine can’t work normally, you may use this function to reset. This function will not delete the document in the machine or memory card.

1. Press【UP/Down Key】to choose the “Reset ” menu, press【OK Key】to enter the sub menu.
2. Press【UP/Down Key】to confirm, press【OK Key】to confirm and save the back to the Reset mode.

3.5 WIFI connect settings

This machine can do remote operation in WIFI mode, the function and the related operation are going to introduce below.

1. Press【Menu Key】for 3 seconds to turn on the WIFI function, at this moment, the screen shows“WIFI connecting”, press the【Menu Key】to turn it off.
2. Android system and tablet can download the “ismart DV” app in Google Play then install it.
3. IOS system can do the same.
4. Wake up the telephone, select the “settings” option and click “WIFI” to enter the sub menu, search the machine names “FHDV_******” and click the machine you need to connect, enter the code“1234567890” and confirm.
5. Turn on the APP “ismart DV” and enter to do the remote operation.

Attention!

The operation method may be different from different equipment, but generally are the same, there is less effect on the operation for the users to use this machine.

4.Appendix

4.1 Techinical Specfication

Sensor	800-megapixel CMOS sensor, Up to 24 million pixels (interpolation)
Sensibily	Auto, ISO50, ISOIOO, ISO200, ISO400
Storeage midea	class 6 SD/SDHC card or higher ,max memory 32GB
Lens	Lens fixed F/3.2,f=7.5mm
Focus Range	Normal 0.7MM infinity
Image	File format JPEG Resolution,24M,20M,16M,12M,10M, 8M,7M,5M,3M,2M
Video	File formatAVI Resolution: FHD 1080P/30fps, HD 720P/60fps, HD 720P/30fps, VGA 640X480/60fps
Metering mode	center,multi,spot
Anti-shake	Auto
IR light	yes,+3M
Remote control	yes,+6M
Screen	3.0 Inch TFT screen
WIFI	yes,preview and remote control with cellphone
White Balance	Auto/Sunlight/Cloudy/Lamp/Fluorscent(H)/Fluorscent(L)
Exposure	-2.0EV+2.0EV
Self timer	off ,2s ,10s two continue shooting
TV output	HD ，NTSC/PAL
PC interface	USB 2.0
Auto power off	off ,1min ,3mins ,5mins
Dimension	128（L）×55（W）×59（H）mm
Weight	around 295±5g

4.2 common problem and solution

Suddently shut down	**Possible causes**	**Solutions**
Questions	Not properly install battery/ No battery	Properly install battery according to the manual/Charge battery
Unbootable	Opened power saving/No battery	Repeatedly open power supply/Exchange new battery
Not sotre the shot video	Interrupt power before storing the photo	When the battery indicator becomes red, immediately exchange the new battery or charge the battery.
Automatically close when self shooting	No battery	Exchange new battery/Charge battery
Ambiguously focusing	Out of focus range	Shoot in focusing range
Not use memory card	Protected memory card/ Error document format Damage memory card	Release memory card protection/ Format memory card Exchange th qualified memory card
Inaction of all keys	Short circuit in connection of the machine and other device	Repeatedly check the connecting circuit/ Take out the battery and repeatedly open the machine

FCC Statement

Changes or modifications not expressly approved by the party responsible for compliance could void the user's authority to operate the equipment.

This equipment has been tested and found to comply with the limits for a Class B digital device, pursuant to Part 15 of the FCC Rules. These limits are designed to provide reasonable protection against harmful interference in a residential installation. This equipment generates uses and can radiate radio frequency energy and, if not installed and used in accordance with the instructions, may cause harmful interference to radio communications. However, there is no guarantee that interference will not occur in a particular installation. If this equipment does cause harmful interference to radio or television reception, which can be determined by turning the equipment off and on, the user is encouraged to try to correct the interference by one or more of the following measures:

-- Reorient or relocate the receiving antenna.

-- Increase the separation between the equipment and receiver.

-- Connect the equipment into an outlet on a circuit different from that to which the receiver is connected.

-- Consult the dealer or an experienced radio/TV technician for help

This device complies with part 15 of the FCC rules. Operation is subject to the following two conditions (1)this device may not cause harmful interference, and (2) this device must accept any interference received, including interference that may cause undesired operation.

All photos in this manual are for reference only.Please looktjhe actual product.
We reserved the finally explanation right.In case of all data and parameters are modified,
please look the actual.No further information about the changed.

FP171209-FR480W-A1