Smart Cabinet Lock

Release: version1.3

Date: 26-Aug-2019

CHENGDU HIZIMA TECHNOLOGY CO.,LTD
D2-2F, MOJU INDUSTRIAL PARK, #199, XIQU AVENUE, HI-TECH ZONE WEST, CHENGDU, SICHUAN, CHINA
People's Republic of China
Tel: (86) 28-87885966
Fax: (86) 28-87886166
Email: sales@hizima.com

Copyright

Copyright©2015, CHENGDU HIZIMA TECHNOLOGY CO.,LTD All Rights Reserved.

No part of this document may be reproduced or transmitted in any form or by any means without prior written consent of Chengdu Hizima Technology Co., Ltd.

and HIZIMA are trademarks or registered trademarks of CHENGDU HIZIMA TECHNOLOGY CO.,LTD

All other trademarks that may be mentioned in this document are the property of their respective owners.

The information in this document is subject to change without notice. In no event shall Hizima be liable for any direct, indirect, incidental, special, exemplary, or consequential damages (including, but not limited to, procurement of substitute goods or services; loss of use, data, or profits; or business interruption) however caused and on any theory of liability, whether in contract, strict liability, or tort (including negligence or otherwise) arising in any way out of the use of this document or the related content on the website, even if advised of the possibility of such damage.

Security Statement

Important! Before powering on and starting any HIZIMA product, please read the security and compatibility information of the product.

Environmental protection

All HIZIMA products have been designed to comply with the environmental protection requirements. The storage, use, and disposal of HIZIMA product must meet the applicable national laws and regulations.

Document Description

The words and graphs in the document are for description of HIZIMA products specification or features.

Document Attributes

Attribute	Content
Document topic	Smart Cabinet Lock Data Sheet
Document No.	
Last update	Oct. 15th, 2018
Document status	Released

Revision Records

Document Version	Revision date	Revised by	Description
V1.0	15-10-2018	ZHOU	Finish the first version data sheet
V1.1	27-12-2018	ZHOU	Finish the revised version data sheet
V1.1	17-07-2019	ZHOU	Finish the revised version data sheet
V1.1	26-08-2019	ZHOU	Finish the revised version data sheet

Contact

1. Product Overview.....6
1.1. Brief introduction to Hizima dual channel smart cabinet lock.....6
1.2. Key Features.....7
1.2.1. High Security.....7
1.2.2. Manageable.....7
1.2.3. High Generality.....7
1.3. Workflow.....8
2. Specification.....8
3. Composition.....8
3.1. Cabinet lock body.....9
3.1.1. Parts list.....9
3.1.2. Dimensions.....10
3.2. Battery box.....11
3.2.1. Dimension of battery box.....12
3.2.2. Wiring.....12
4. Installation.....13
4.1. Adjustment for left opening door or right opening door.....14
4.2. Adjustment for steel bolt.....14
4.3. Use the punch location paper template.....15
4.4. Three installation ways.....15
4.4.1. Standard installation.....15
4.4.2. Sprocket box type heighten installation.....17
4.4.3. Steel bolts heighten installation.....18
Exploded Diagram.....19
4.5. Battery Box.....20
4.5.1. Installation.....20
4.5.2. Replacement of battery.....21

5. Operation of unlock and lock..... 21

5.1. Appearance diagram.....22

5.2. Unlock via smart key.....22

5.3. Unlocking via Bluetooth.....23

5.4. Restart.....23

6. Dos and don'ts..... 23

7. Order information..... 24

1. Product Overview

1.1. Brief introduction to Smart Cabinet Lock

ZMB-2BK smart dual channel cabinet lock is a mechanical-electrical integration lock to install on cabinet. It has a built-in micro processor, working together with Hizima's centralized management Platform and APP to control access and realize remote authorization, centralized management, record traceable etc. functions.

It's designed with two unlocking channels:

1. Unlock by Hizima smart key: It is not necessary to connect external power supply if adopt thisunlocking channel only. The smart key provides power supply to the lock When insert the key into it. It is especially suitable for all kinds of outdoor cabinets without external power supply or inconvenient wiring, etc.

2. Unlock through Bluetooth: This cabinet lock could be opened throughBluetooth without key. Through this channel, itneeds to connect external DC power supply. The operation on App and Platform to obtain authorization is same as unlocking by key channel.

ZMB-2BK is designed with guards against technical unlock. If the smart key lost, the lock cylinder don't need to be changed, only need to disable the access authorization of the lost smart key from the central platform via APP. Also, it can

monitor the status of lock. If there is any anomaly, the acousto-optic indicators will alarm.

1.2. Key Features

1.2.1. High Security

• Bidirectional encryption authentication security chip, no mutual opening rate, prevent technical unlock.

• Acousto-optic alarms in abnormal condition.

• Smart key cannot be duplicated.

1.2.2. Manageable

• Independent dual-channels control, two unlocking modes Bluetooth(requiring external electricity) and Smart key.

• Lock and unlock records controllable and traceable.

• Centralized authorization, and authorizing method is flexible and can be combined.

• Support online and offline working mode and it can upload operation log automatically.

• The key is universal. One Smart Key for multiple locks to improve work efficiency and reduce management cost.

1.2.3. High Generality

• Multiple installation way, adaptable to all cabinet types.

• Wide application, suitable for both indoor and outdoor environments.

• Easy to upgrade the mechanical cabinet locks installed on equipment cabinet\general cabinet\integrated cabinet to smart cabinet locks.

• Set Power mode and door magnetic mode via CMS configuration.

1.3. Workflow

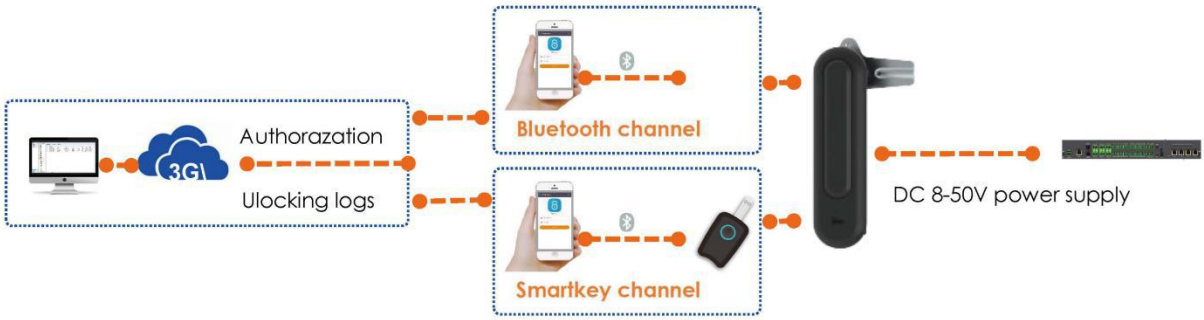

2. Specification

Mode	ZMB-2BK
Input voltage	DC 8V—50V（Bluetooth mode）
Bluetooth	BLE4.0
Battery	CR123A disposablelithium battery (Bluetooth channel)
Smart key	Support
Logs	1000
Working Current	unlocking currency：<100mA Standby currency：<8mA
Working environment	Temperature：-30 ~ 65℃ Humidity： 5 ~ 90%
Shaft force	30 N.m
Material of body	Zinc Alloy
Ingress Protection	IP65
Weight	1.4kg
Length of cables	120cm
Indicator	Acousto-optic alarms

Note: Please communicate with us if there is external standby power supply or a separate battery power supply requirement.

3. Composition

The ZMB-2BK Smart Cabinet Lock consists of a cabinet lock body and a power supply box. Both are connected by cables.

3. 1. Cabinet lock body

It consists of the lock main body and parts. Different installation way needs different parts.

3.1.1. Parts list

No.	Items	Specification	Materials	Qty
1	Lock body	184X48X40	Zinc Alloy	1
2	Handle	126.5*25*25.5	Zinc Alloy	1
3	Shaft limit block	Φ20.3X2.5	Q235	1
4	Lock body rubber pad	184*48*1.2	硅胶	1
5	Shaft washer	Φ18XΦ11X1.2	Q235	7（适配）
6	Heighten washer A	Φ19X11	Zinc Alloy	1
7	Steel bolt	72x65x4	Stainless steel	1
8	Flat pad	Φ5.3*Φ20*1.2	Stainless steel	1
9	M5X40 Cross hexagon combined screw M5X20 Cross hexagon combined screw	Choose one according to real needs	Stainless steel	1 1
10	Φ5 Spring washer	GB/T 93-1987	Stainless steel	1
11	Steel bolt insert	72*65*4	Stainless steel	2
12	Heighten washer B	Φ19X11	Zinc Alloy	3（适配）
13	M5X20 Cross screw with pan head	GB_T9074.8-1988	/	4
14	Long fixing clamp plate	44*46*18	Q235	2
20	Heighten frame	205*57*19	Zinc Alloy	1
21	Heighten frame rubber pad	205*57*1.2	Silica gel	1
22	Short fixing clamp plate A	55*53*6	Q235	1
23	Short fixing clamp plate B	55*53*5	Q235	1

24	M5X16 Countersunk head cross screw	GB819-85	Q235	2
25	Punch location paper template		paper	1
26	Adhensive strips			
30	Sprocket box	Parts of original cabinet lock		1
31	Sprocket box fixing screw	Parts of original cabinet lock		2
50	Cabinet door			/

3.1.2. Dimensions

Dimension of standard lock installation and trepanning (without heighten frame):

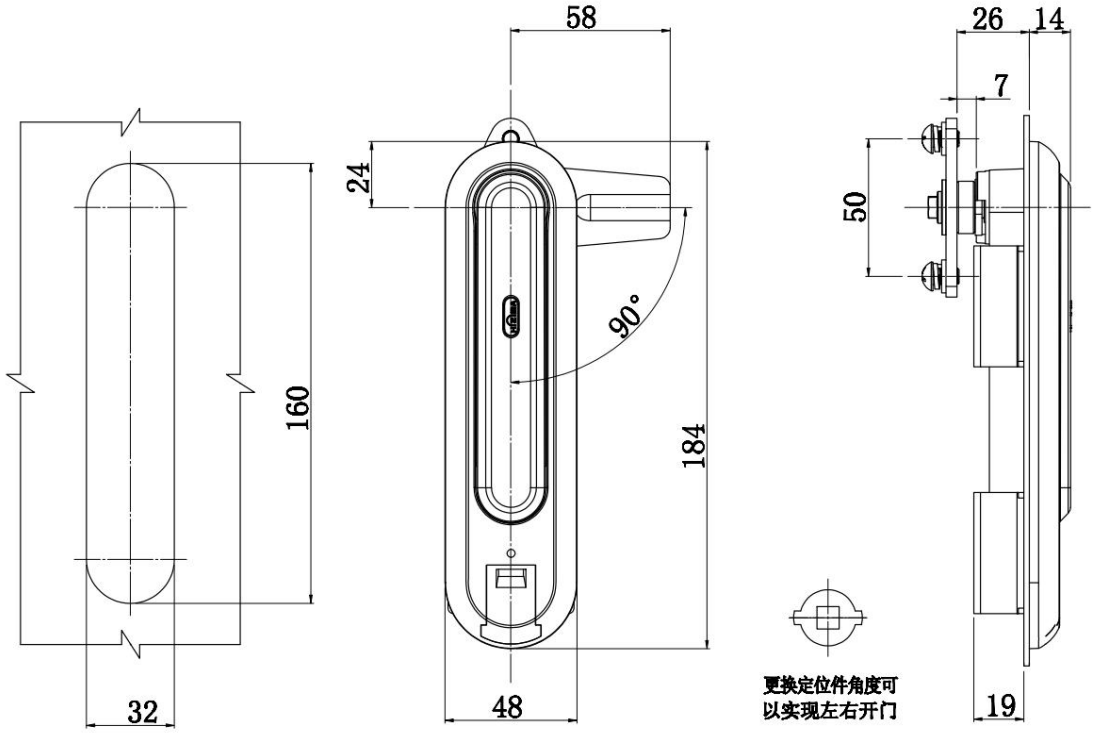

Dimension of installation and trepanning with heighten frame

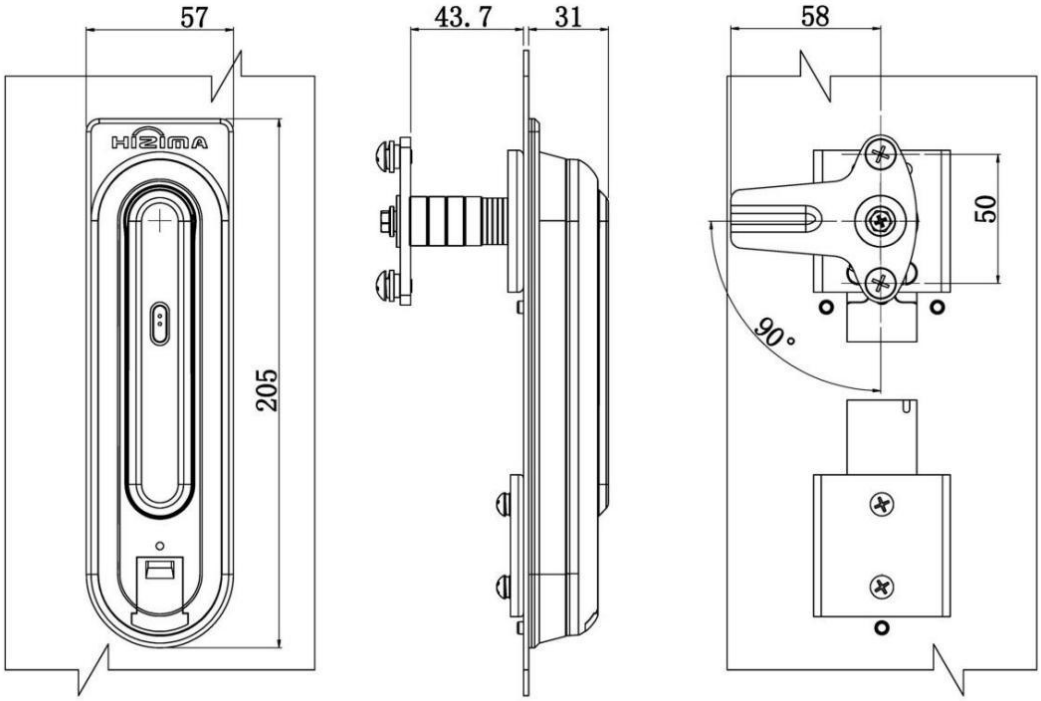

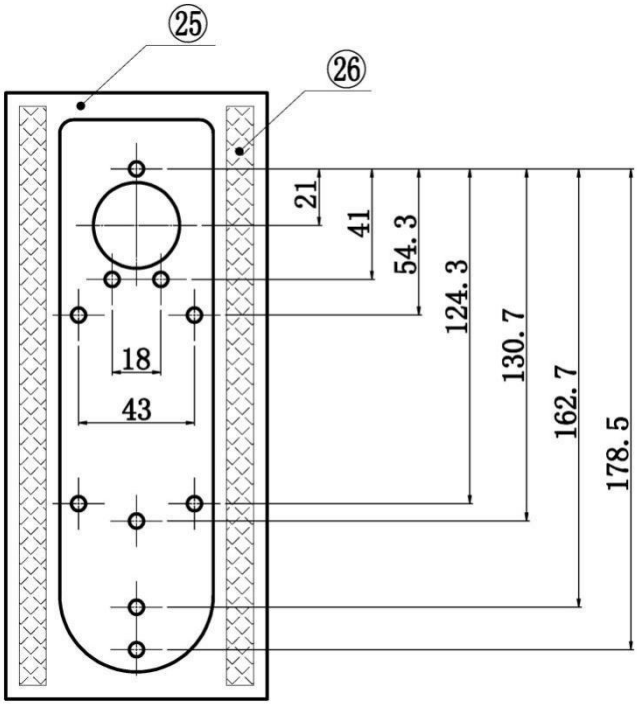

3.2. Battery box

It consists of battery box and cuboids magnet.

It's to provide power supply to the cabinet lock, by connecting with external DC power or installing disposable lithium battery, or use both at same time. It's preferred to use external DC power. The external DC power supply range is DC 8-50v, and the disposable

battery is DC 3V. It's recommended to use Panasonic CR123A.

The battery box also equipped a reed switch to detect if the cabinet lock has been closed.

3.2.1. Dimension of battery box

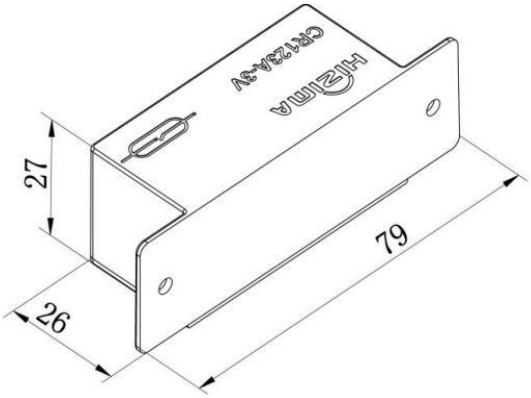

3.2.2. Wiring

Old Version

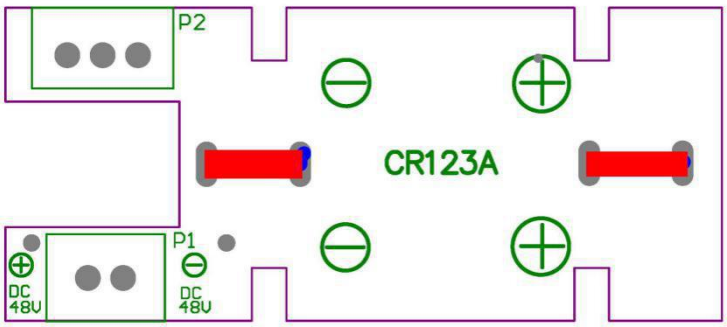

socket	function	remark
P1	Connect with DC power in cabinet	DC 8V — 50V. Note: left is positive electrodeand right is Negative electrode , according to marks onPCB.
P2	Connect with the cabinet lock	From left to right are power ground, power positive and door switch

New Version

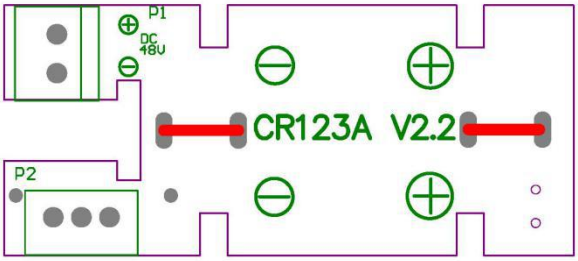

Front of PCB

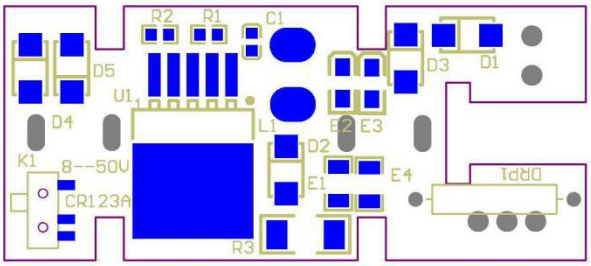

Back of PCB

socket	function	remark
P1	Connect with DC power in cabinet	DC 8V — 50V. Note: left is positive electrodeand right is Negative electrode , according to marks onPCB.
P2	Connect with the cabinet lock	From left to right are power ground, power positive and door switch

If the P1 socket is connected to the DC power supply of the cabinet, the switch K1 must be placed on the upper part, where is at the position of 8-50V, please check the picture" Back of PCB". At this time, the DC power supply of the cabinet will be preferentially used, and it will automatically switch to the battery power supply when the DC power supply of the cabinet is cut off. If the DC power supply of the cabinet is not connected to the P1 socket, it is better to put the switch K1 at the bottom part, where is at the position of character CR123A position, then the battery has greater utilization.

4. Installation

After the whole installation process is completed, the test should be carried out. During the test, the cabinet door should be opened for preliminary test. After the test

finished without problem, conduct the door opening and closing test to avoid the situation that the door cannot be opened due to wrong installation.

4.1. Adjustment for left opening door or right opening door

Change the installation direction of the shaft limit block 3 to adapt to the left opening door or the right opening door.

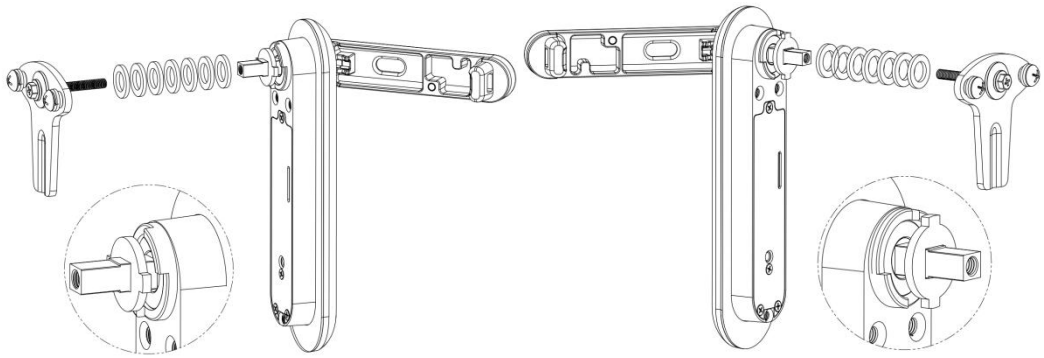

Left opening Right opening

4.2. Adjustment for steel bolt

The height between the steel bolt 7 and the cabinet door can be adjusted by changing the number proportion of the shaft washer 5 before or after the steel bolt 7 and increasing or decreasing the number of the heighten washer 6 and 12.

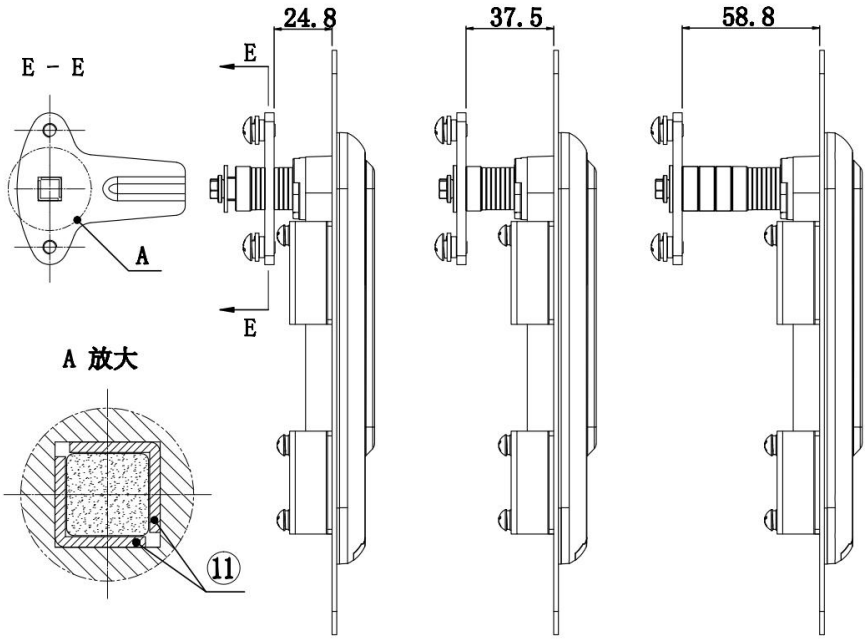

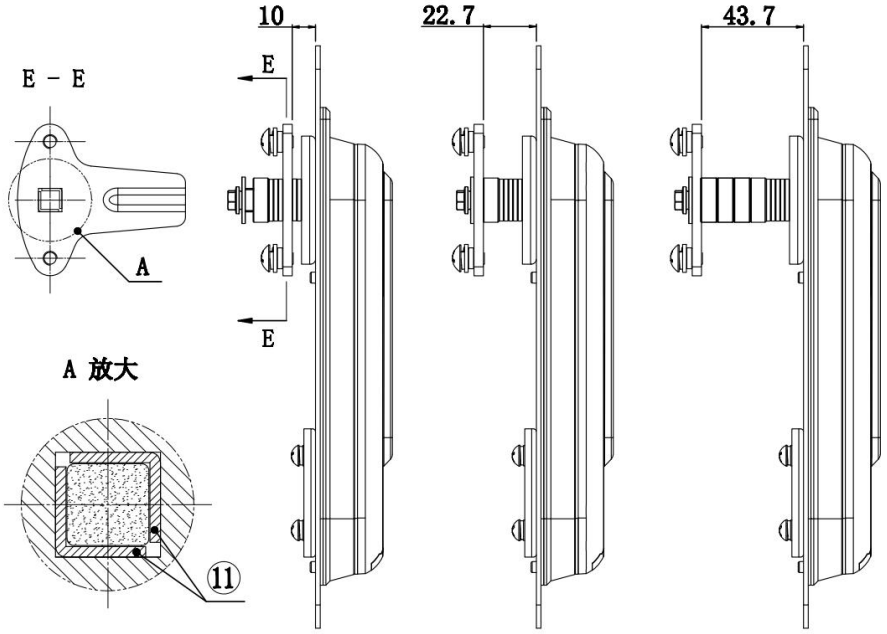

4.3. Use the punch location paper template

If use heighten frame installation way, use the punch location paper template 25 to punch the cabinet door will save time. The step is: 1) embed the punch location paper template 25, lock body 1, heighten frame 20 to the original hole of cabinet door 50 to determine the position.2)peal off the cover of adhensive strips 26, and stick the template on the cabinet door 50. 3) punch holes according to the hole position and size on the paper template. If there are exact holes already existed on the lock, then no need to make it.

4.4. **Three installation ways**

4.4.1. Standard installation

Suitable for the new cabinets or old cabinets with holes just matching with installation requirements.

Exploded Diagram

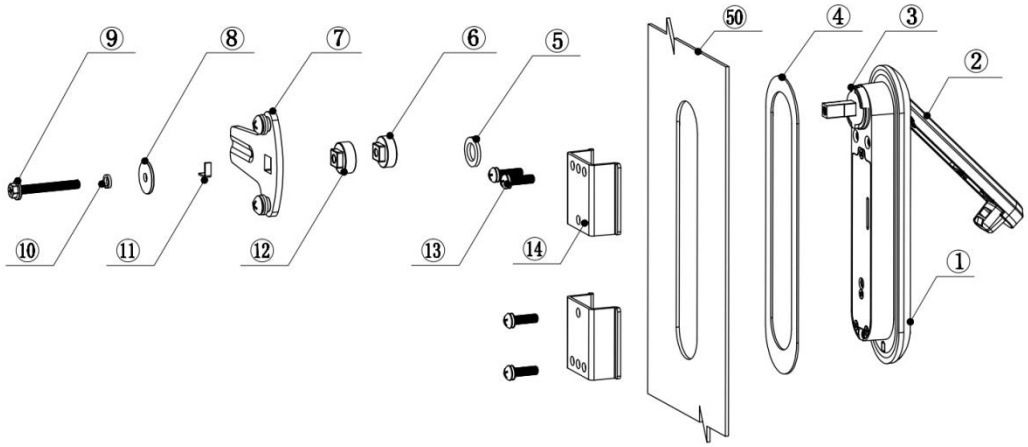

Installation steps

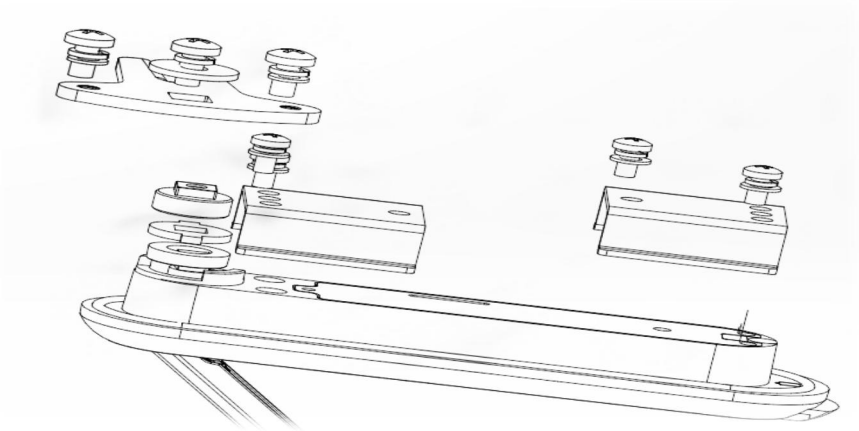

1	Insert the lock body1,lock body rubber pad4 into the cabinet door50 from outside.
2	Install Long fixing clamp plate14 on the lock body1, and tighten it with M5X20 Cross screw with pan head13.
3	Install shaft washer5, Heighten washer A 6, Heighten washer B 12 on the lock body1 shaft in turn.For height adjustment, please refer to " 4.2.Adjustment for steel bolt" section.
4	Then install steel bolt7, flat pad8, Φ 5 Spring washer10 in turn, and tighten them with cross hexagon combined screw9.Left and right opening adjustment please refer to" 4.1. Adjustment for left opening door or right opening door" section.
5	Installation finished. Check whether whether the installation is missing or wrong.

Effect after installation:

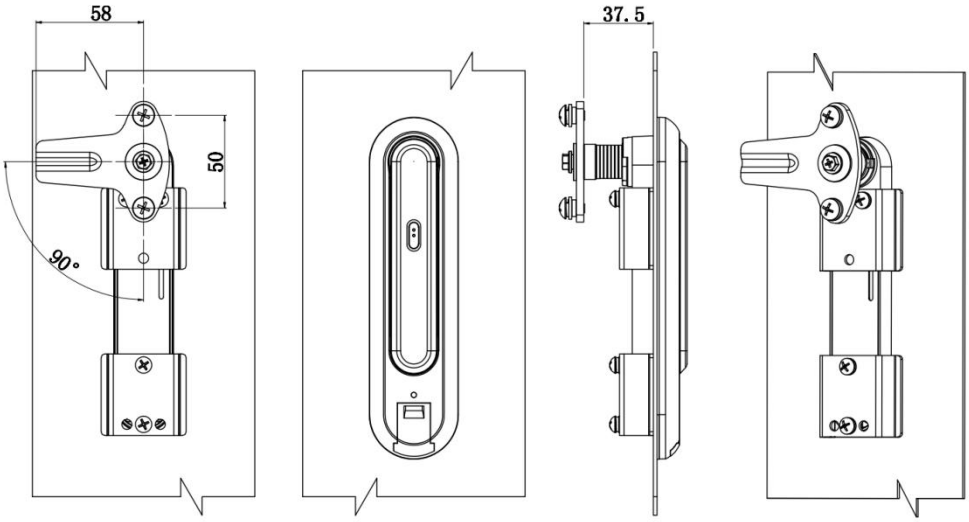

4.4.2. Sprocket box type heighten installation

Suitable for the old cabinets which are the sprocket box type. (the corresponding accessories are not in the standard configuration.)

Exploded Diagram

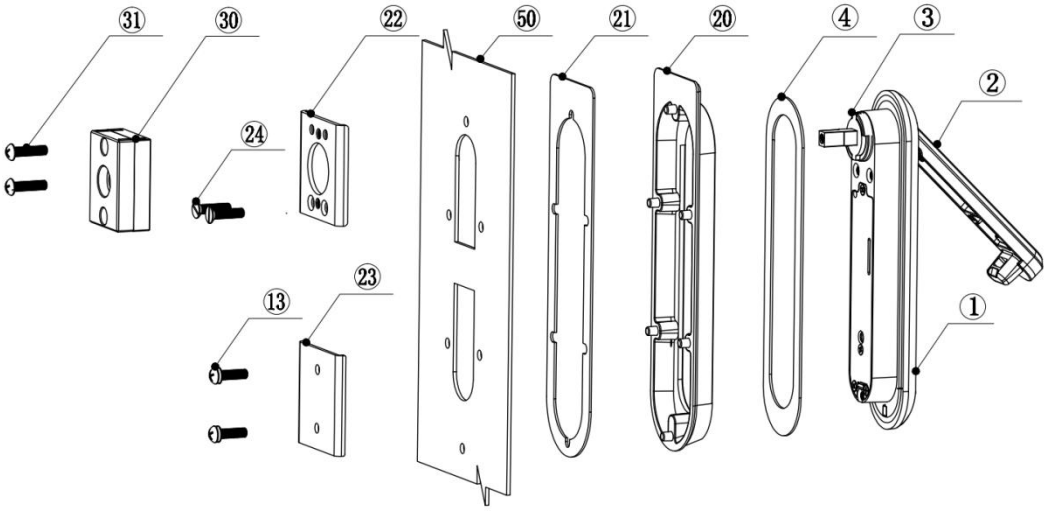

Installation steps

1	At the position that required to use heighten frame20on the cabinet door, punch6 Φ6mm round holes at the six bumps position that contacted with the cabinet door. Hole size please refer to"higher installation punch holes and size" section, or use the the punch location paper template25 andrefer to" 4.3. Use the punch location paper template"section.
2	Insert the lock body1,lock body rubber pad4,heighten frame20, Heighten

	frame rubber pad21 into the cabinet door50 from outside.
3	Use Short fixing clamp plate A 22, Short fixing clamp plate B 23, to install on the lock body1, and tighten them with M5X16 Countersunk head cross screw and M5X20 Cross screw with pan head.
4	Install the shaft washer5 on the lock body1.
5	Finally, use Sprocket box fixing screw to fix the Sprocket box30 and other parts on Short fixing clamp plate A 22.
6	Installation finished. Check whether whether the installation is missing or wrong.

Effect after installation

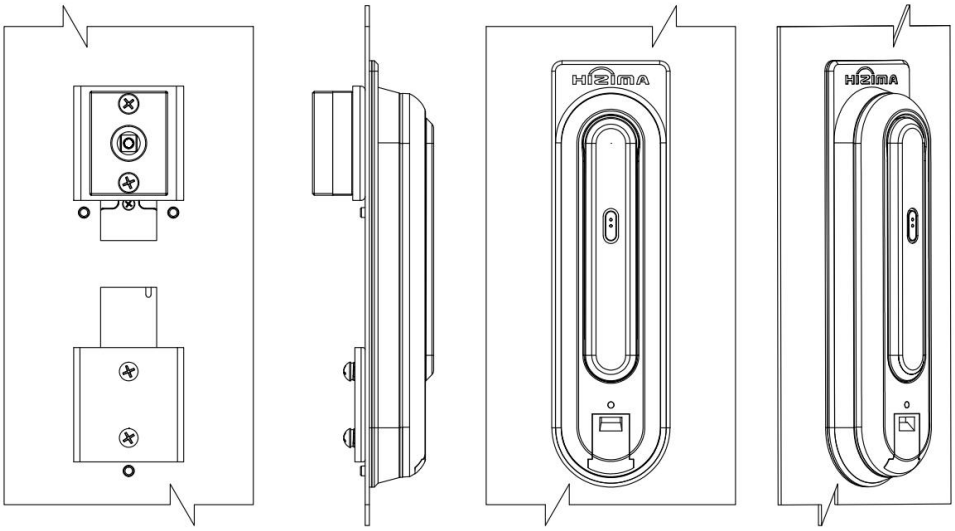

4.4.3. Steel bolts heighten installation

Suitable for the old cabinets which are the steel bolts type. (the corresponding accessories are not in the standard configuration.)

Exploded Diagram

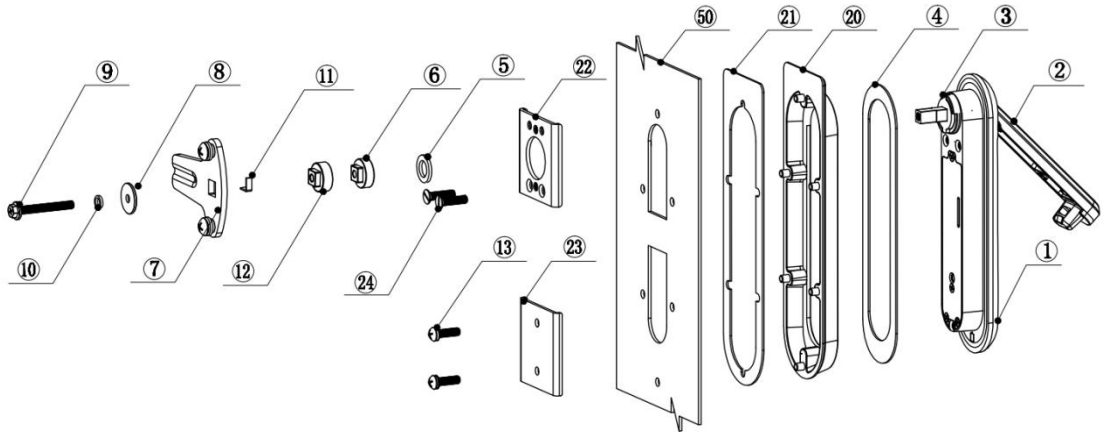

Installation steps

1	At the position that required to use heighten frame20on the cabinet door, punch6 Φ6mm round holes at the six bumps position that contacted with the cabinet door. Hole size please refer to"higher installation punch holes and size" section, or use the the punch location paper template25 andrefer to" 4.3. Use the punch location paper template"section.
2	Insert the lock body1,lock body rubber pad4, heighten frame20, Heighten frame rubber pad21 into the cabinet door50 from outside.
3	Use Short fixing clamp plate A 22, Short fixing clamp plate B 23, to install on the lock body1, and tighten them with M5X16 Countersunk head cross screw and M5X20 Cross screw with pan head.
4	Install the shaft washer5, Heighten washer A 6, Heighten washer B 12 on the lock body1 shaft in turn. Height adjustment please refer to “4.2. Adjustment for steel bolt”.
5	Then install steel bolt7, flat pad8, Φ 5 Spring washer10 in turn, and tighten them with cross hexagon combined screw9.Left and right opening adjustment please refer to" 4.1. Adjustment for left opening door or right opening door" section.
6	Installation finished. Check whether whether the installation is missing or wrong.

*** If the steel bolt7 provided by this product cannot meet the requirement of size during installation, the original steel bolt of the cabinet can be used.

Effect after installation

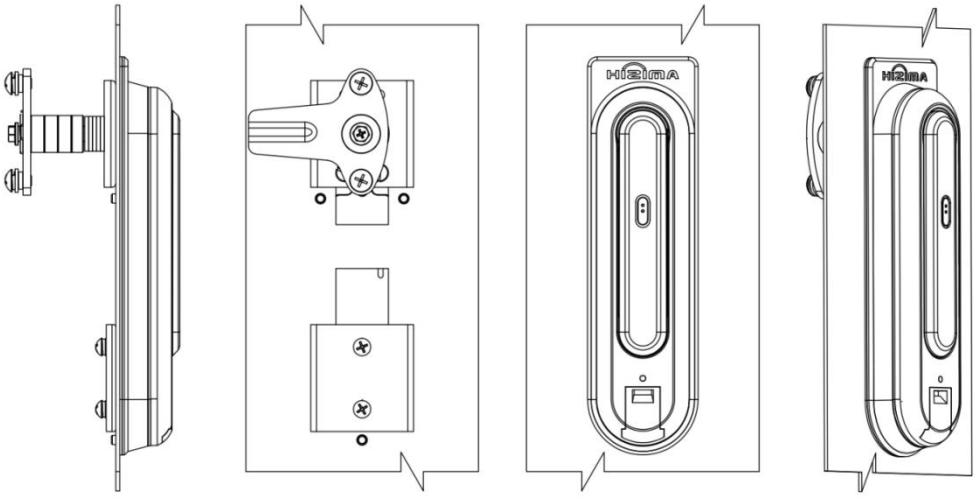

4.5. Battery Box

4.5.1. Installation

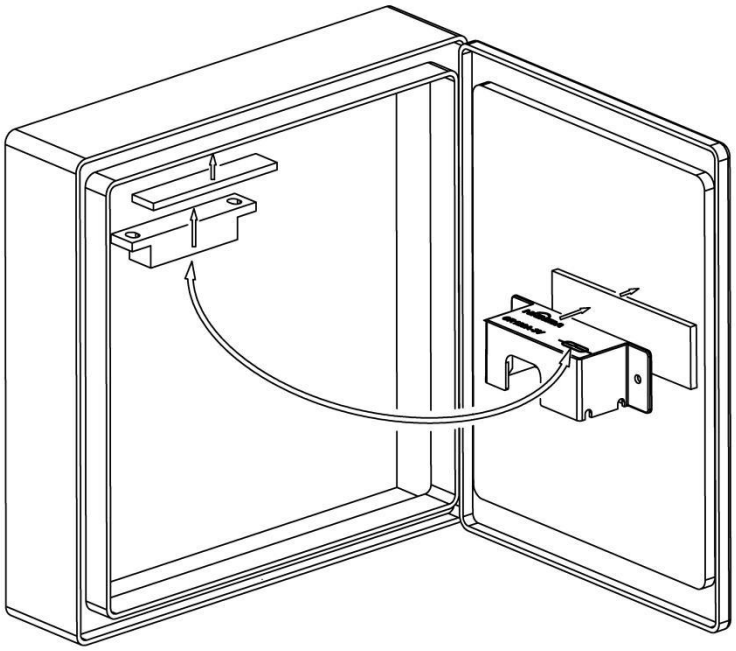

The magnet can be fixed on the door frame or other suitable position, and the battery box can be fixed by rivets and screw, or by foam gum (which should ensure long-term firm sticking). When the door is closed, the magnet should be aligned with the switch mark on the power box, and the distance is less than 5 mm. When the door is closed, the door switch and the power supply ground are short-circuited. When the door is open, the door switch and the power supply open.

So the sensor is not installed properly, even if the cabinet door is completely closed, the cabinet lock will not turn off the power supply, especially in the case of battery power supply, the

battery power will rapidly decline.

If this function is not used, the magnet should be fixed with tape at the reed mark on the battery box, and the installation of the battery box is not subject to the above restrictions. Also can disable the door magnetic function via CMS configuration

4.5.2. Replacement of battery

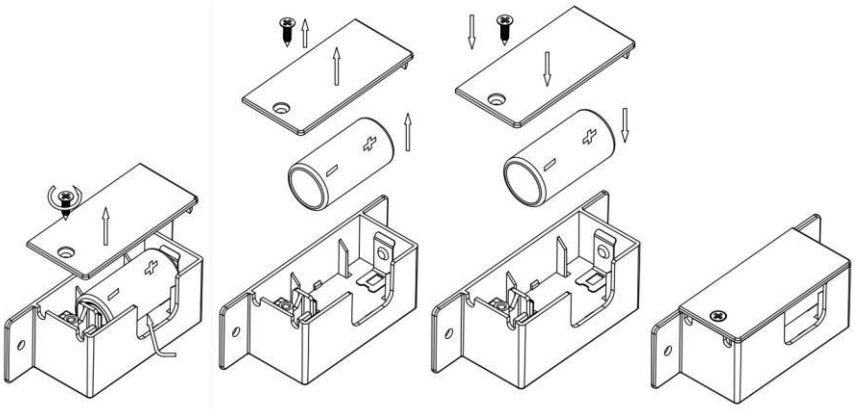

*** The positive and negative electrodes of the battery cannot be installed in reverse. They must be consistent with the mark on the PCB.

*** Under the circumstances of different temperatures and time consumption of each operation with lock, the lifetime of battery is different. When the remaining battery is lower than 20%, it is recommended to replace the battery immediately.

5. Operation of unlock and lock

5. 1. Appearance diagram

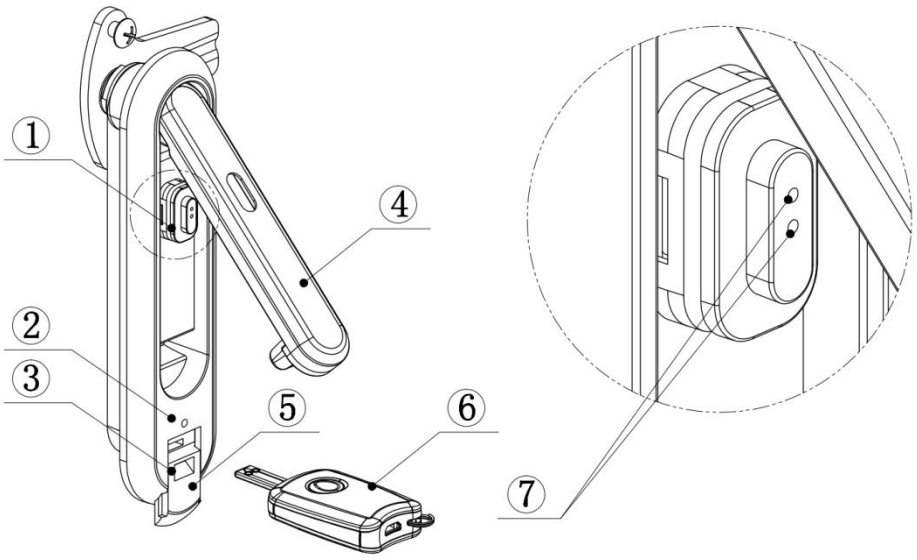

1、Bluetooth antenna 2、light indicator 3、key hole 4、handle 5、dust cover、6 smart key 、7 Reset electrode

5. 2. Configurable parameters

This feature requires the software version greater than 0108.

5.2.1. Battery Parameters

A. Battery mode: It has the lowest power consumption and is suitable for battery-only mode. The lock does not generate the lock record. Only generating the lock record, the power is turned off immediately after the lock is turned on, and there will be no prompt regards if lock is closed or not.

B. External power supply mode/DC power mode: The power consumption is relatively high. It is suitable for the external DC power supply. The lock generates the locking and unlocking records. After the lock is opened, the power will not be turned off immediately. Only when the lock is closed, the power is turned off.

C. Automatic mode: When the voltage is greater than 3V, it works in the external power supply mode/DC POWER, otherwise will be in the battery mode.

5.2.2. Door Magnetic Parameters

Disabled: Door magnetism is not used as the basis for judging whether the lock is closed or not.

Enabling: Door magnetism is used to judge whether the lock is closed or not.

5. 3. Unlock via smart key

1、Insert the key6 into the key hole3 of the dust cover5, press it down, move the dust cover5 down, and insert the key6 into the key hole3 completely.
2、According to different ways of unlocking, after the key lamp flickers (buzzer sounds), press the handle and hold for about 1 second.
3、Release the handle4, the handle4 pop-upautomatically, wait about 2 seconds (Please pay attention that you can't take off the key6 during this period, otherwise you may have a situation where the handle4 can't be closed. If it happens, press down the handle4 to remain closed, and then re-do a full unlocking operation to remove this abnormal state), and then press the key button to remove the key6, and dust cover5 automatically back. After that turn the handle4 to open the door.
4、When user's jobs finished, press down the handle4 and the lock will be locked automatically.

5. 4. Unlocking via Bluetooth

1、Gently press the handle4 then release to activate the power of the cabinet lock, the indicator light2 turns on.
2、Connect APP with the lock (use APP to search the lock and connect), then the indicator light2 flashes. If the user does not use APP to connect with the lock for more than 30 seconds, the lock will automatically power off.
3、The buzzer emits a short sound after APP sends an unlocking signal to the lock. If the handle4 is not in reset mode, the unlocking signal is invalid;
4、Press the handle4 for about 1 second and release, the handle4 will automatically pops up. If this action is not done within 10 seconds, the lock will automatically lock up and power off.
5、When user's jobs finished, close the door and press down the handle4 and the lock will be locked up automatically, and the buzzer will ring for a short time then the lock power off. When the lock power is in battery mode, the power will be turned off immediately after the lock is unlocked, and there will be no buzzer prompt.

5. 5. Restart

In the case of lock crashing, use metal wire or metal things to short- circuit the two restart electrodes and then remove, and the restarting is completed.

6. Dos and don'ts

1、Please do notexceed the limits specified in this specification when use the lock.

2、Do not wrap or forcedly pull the powerwire, that may cause functional damage.
3、In the process of installation, please take care to handle the parts gently,avoiding falling down to cause damage.
4、The product is non explosion-proof and cannot be used in inflammable and explosive environment.
5、Do not hit the lock bodyheavily; do not wipe the lock body withcorrosive materials.
6、If the battery is used, remove the battery as soon as possible after the battery is running up, in case the battery leakage damage the battery box.

7. Order information

Product Name	Item no.	Description
Smart Cabinet Lock	ZMB-2BK	Smart Cabinet Lock

Warning

This device complies with Part 15 of the FCC Rules. Operation is subject to the following two conditions:

1.This device may not cause harmful interference, and
2.This device must accept any interference received, including interference that may cause

NOTE 1: This equipment has been tested and found to comply with the limits for a Class B digital device, pursuant to part 15 of the FCC Rules. These limits are designed to provide reasonable protection against harmful interference in a residential installation. This equipment generates, uses and can radiate radio frequency energy and, if not installed and used in accordance with the instructions, may cause harmful interference to radio communications. However, there is no guarantee that interference will not occur in a particular installation. If this equipment does cause harmful interference to radio or television reception, which can be determined by turning the equipment off and on.

Any change or modification to the product not expressly approved by CHENGDU HIZIMA TECHNOLOGY CO.,LTD could void the user's authority to operate the device.

RF Exposure Information and Statement

This transmitter must not be in co-location or operating in conjunction with any other antenna or transmitter. This device complies with FCC RF radiation exposure limits set forth for an

uncontrolled environment.This device should be installed and operated with a minimum distance of 20cm between the device and your body.