Fold Fold 17” Fold

TROUBLE SHOOTING

PROBLEM	POSSIBLE CAUSE	SOLUTION
Light will not come on.	A. Light switch is turned off. B. Fuse is blown or circuit breaker is turned off. C. Incorrect circuit wiring. D. Motion sensor head is not aimed correctly. E. The light is in a brighter environment.	A. Turn light switch on. B. Replace fuse or turn circuit breaker on. C. Verify that fixture is wired properly. D. Re-aim the motion sensor to cover the desired area. E. Install the lamp in a dark environment.
Lights come on during the day.	A. Motion sensor may be installed in a relatively dark location. B. Motion sensor is in TEST mode.	A. Reposition motion sensor. B. Switch the ON-TIME setting option to another time location.
Lights come on for no apparent reason.	A. Motion sensor may be sensing moving objects such as trees, traffic, etc. B. Sensitivity may be set too high.	A. Reposition motion sensor. B. Reduce sensitivity.
Lights flash on and off.	A. Heat or light from the lamp heads may be turning the motion sensor on and off. B. Heat being reflected from other objects may be turning the motion sensor on and off.	A. Reposition lamp heads away from the motion sensor. B. Reposition motion sensor.

FCC WARNING:

WARNING: Changes or modifications to this unit not expressly approved by the party responsible for compliance could void the user authority to operate the equipment.

11”

****

This device complies with Part 15 of the FCC Rules. Operation is subject to the following two conditions:
(1) this device may not cause harmful interference, and
(2) this device must accept any interference received, including interference that may cause undesired operation.

NOTES: This equipment has been tested and found to comply with the limits for a Class B digital device, pursuant to Part 15 of the FCC Rules. These limits are designed to provide reasonable protection against harmful interference in a residential installation. This equipment generates, uses and can radiate radio frequency energy and, if not installed and used in accordance with the instructions, may cause harmful interference to radio communications.

However, there is no guarantee that interference will not occur in a particular installation. If this equipment does cause harmful interference to radio or television reception, which can be determined by turning the equipment off and on, the user is encouraged to try to correct the interference by one or more of the following measures:

- Reorient or relocate the receiving antenna.
- Increase the separation between the equipment and receiver.
- Connect the equipment into an outlet on a circuit different from that to which the receiver is connected.
- Consult the dealer or an experienced radio/TV technician for help.

RF EXPOSURE: This equipment complies with FCC radiation exposure limits set forth for an uncontrolled environment. This equipment should be installed and operated with minimum distance of 20 cm between the radiator and your body. This transmitter must not be co-located or operating in conjunction with any other antenna or transmitter.

Sky Rich Star Limited
UNIT E, 10/F, WORLDWIDE CENTRE,
123 TUNG CHAU STREET, TAI KOK TSUI,
KL, HONG KONG
Toll-free: 1-877-723-0723

Made in China
© 2019 Sky Rich Star Limited, all rights reserved.
The Honeywell Trademark is used under license from Honeywell International Inc.
Honeywell International Inc. makes no representations or warranties with respect to this product. This product is manufactured for Sky Rich Star Limited.

Honeywell

EN **LED Triple Head Linkable Security Light With 270° Motion Detection**
Use and Care Guide
Read and Save These Instructions Before Use

Model: NK0145A30610

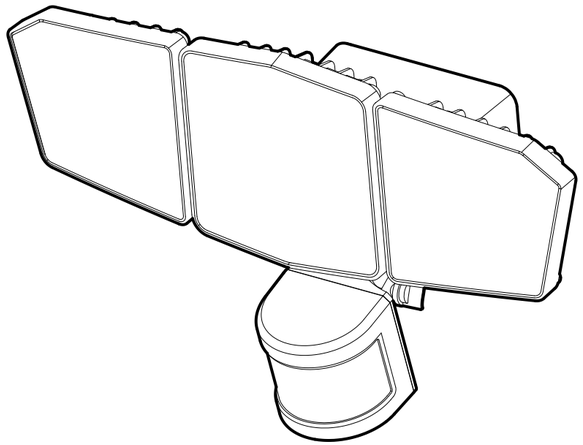

Honeywell

Fold Fold Fold

Fold 17” Fold Fold

11”

SAFETY INFORMATION

WARNING: Read all safety precautions and installation instructions carefully before installing or servicing this fixture. Failure to comply with these instructions could result in a potentially fatal electric shock, fire, and/or property damage.

IMPORTANT: lisez attentivement toutes les précautions de sécurité et les installations avant d'installer ou de réparer ce luminaire. Le non respect de ces instructions peut entraîner un choc électrique et / ou des dégâts matériels potentiellement fatals.

- To reduce the risk of electrical shock or other personal injury, ensure the power is turned OFF at the fuse or breaker box before making any electrical connections.
- Must be connected to 120 volt, 60 Hz power source.
- Fixture should be mounted to a grounded junction box marked for use in wet locations.
- Suitable for wall mount.
- NOT suitable for ground locations. Minimum of 6 feet or higher.

CAUTION- RISK OF FIRE
THIS PRODUCT MUST BE INSTALLED IN ACCORDANCE WITH THE APPLICABLE INSTALLATION CODE BY A PERSON FAMILIAR WITH THE CONSTRUCTION AND OPERATION OF THE PRODUCT AND THE HAZARDS INVOLVED.

ATTENTION – RISQUE D'INCENDIE
CE PRODUIT DOIT ÊTRE INSTALLÉ SELON LE CODE D'INSTALLATION PERTINENT, PAR UNE PERSONNE QUI CONNAÎT BIEN LE PRODUIT ET SON FONCTIONNEMENT AINSI QUE LES RISQUES INHÉRENTS.

SUITABLE FOR WET LOCATIONS ! CONSULT A QUALIFIED ELECTRICIAN TO ENSURE CORRECT BRANCH CIRCUIT CONDUCTOR! MINIMUM 90° C SUPPLY CONDUCTORS! ADAPTÉ AUX LIEUX MOUILLÉS! CONSULTER UN ÉLECTRICIEN QUALIFIÉ POUR ASSURER UN CONDUCTEUR DE CIRCUIT DE BRANCHE APPROPRIÉ! CONDUCTEURS D'ALIMENTATION MINIMUM DE 90° C!

PRE-INSTALLATION

PLANNING INSTALLATION

- Turn off the electrical power at the fuse or circuit breaker box before installing or servicing any part of this fixture.
- Carefully remove the fixture from the carton and check that all parts are included. Be careful not to misplace any of the screws or parts needed for installing the fixture.

HARDWARE INCLUDED

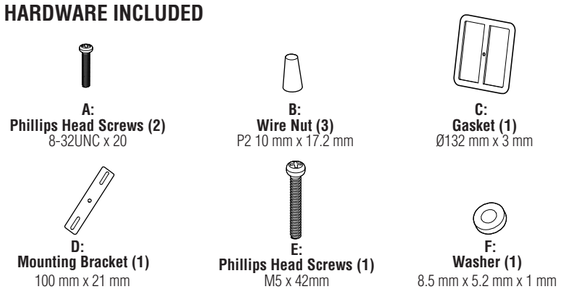

PARTS

G- Light fixture
H- Motion Sensor Head

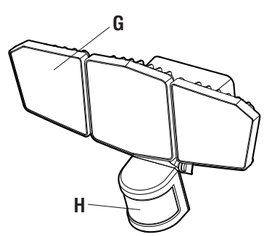

INSTALLATION

CAUTION: Before beginning installation turn off the circuit breaker and light switch.
- This fixture is suitable for wall or eave mount only. Not suitable for ground mount installation. IMPORTANT: Do not use with dimmers or timers.
- Junction box (not included) is required for the assembly.
- For best performance, mount the fixture recommended height of 8-12 feet above the ground.

CONNECTING THE WIRES

1. Route the fixture BLACK, WHITE and GROUND wires through the gasket (C). Remove adhesive from gasket and adhere to light fixture (G) mounting plate.
2. Connect the AC wires to the corresponding wires (BLACK to BLACK, WHITE to WHITE and GROUND to GROUND) in the junction box (not included) using the wire nuts (B).

RECOMMENDED: Wrap each wire nut with electrical tape (not included) after wires have been attached.

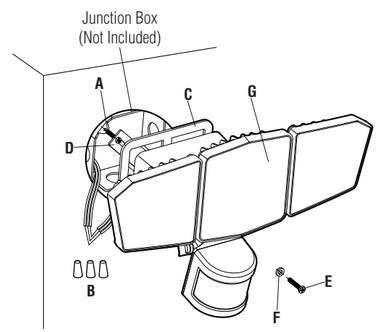

(Figure 1)

MOUNTING THE FIXTURE

1. Secure mounting bracket (D) to junction box by attaching screws (A) through mounting bracket and tightening to junction box. (Figure 1)
2. Insert the washer (F) into the center hole of the light fixture (G).
3. Insert phillips head screw (E) into the center hole of the light fixture (G) and the gasket (C). Secure to the mounting bracket (D).
4. Apply silicone caulk (not included) around the edges of the cover plate to provide a watertight seal from rain and moisture. (Figure 2)

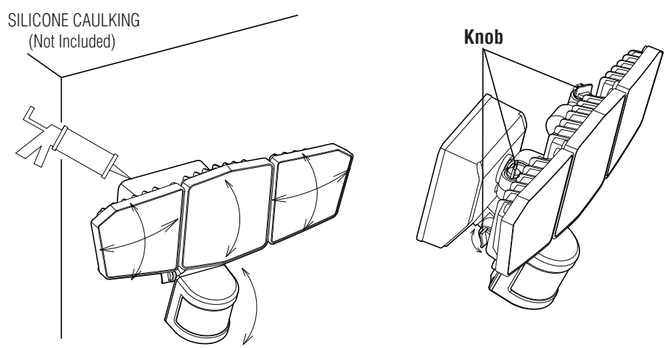

(Figure 2)

INSTALLATION

NOTE: The both sides lamp heads can be adjusted up/down and left/right and middle lamp heads can only be adjusted up/down for optimal lighting coverage. The motion sensor can be adjusted up/down toward desired detection area.

TESTING THE LIGHT FIXTURE

CAUTION: Make sure the motion sensor head is not UPSIDE DOWN.
- Turn on the circuit breaker and light switch.

NOTE: When first turned on wait about 1 minute for the circuitry to calibrate.
- Slide duration (K) to TEST position on back of the motion sensor head (H). (Figure 3)
- Aadjust the motion sensor head (H) toward desired detection area.
- Walk through the coverage area at the farthest distance you wish your detector to detect motion (max 39.4 ft).
- To adjust the fixture's sensitivity to motion, rotate the RANGE knob (J) clockwise to increase sensitivity and counterclockwise to reduce the sensitivity.
- To set the amount of DURATION you want the lights to stay on after the motion is detected, slide duration (K) to point to the desired time setting (1min/5min/10min).

NOTE: Avoid aiming the control at:
- Objects that change temperature rapidly to prevent false triggering, such as heating vents and air conditioners.
- Moving objects such as trees and street traffic.

LINK SET-UP:

1. Up to 6 lights can be connected. Make sure all lights are powered on and set to the TEST position. Select one light to act as parent and others as child lights.
2. Press the link button (L) of the child light. Light should be flashing. Repeat for all child lights.
3. Press link button (L) of the parent light for a minimum of 3 seconds and wait for light to flash.
4. All linked lights will flash and then stop flashing confirming they are now linked.

CCT SWITCH

Color Temperature Presets will set light to 3000k (Warm White), 4000k (Bright White) or 5000k (Daylight)

NOTE: The detection angle of the light is 270 degrees. Lights should not be placed more than 98 feet apart otherwise linking function will not work properly. If you purchase a light after initial installation and want to link you can restart the process to add new light to your linked network.

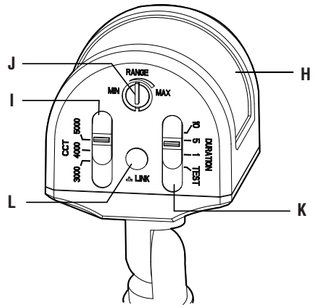

(Figure 3)

FUNCTION SWITCH:
I - CCT Switch
J - Range Knob
K - Timer Switch
L - Link Button

Fold Fold Fold