8.5"

11"

Honeywell

EN

LED Handheld Rechargeable Work Light with Bluetooth Speaker Mounting and Operating Instructions

Read and Save this Instructions Before Use

Model: A03SH061C-AL

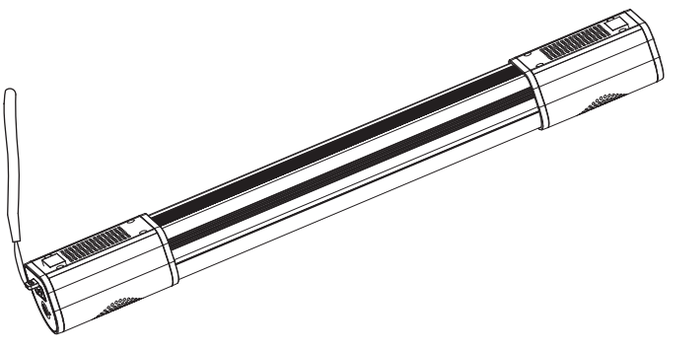

Sky Rich Star Limited
Unit E, 10/F, Worldwide Centre,
123 Tung Chau Street, Tai Kok Tsui,
KL, HongKong
Toll-free: 1-877-723-0723

Made in China

© 2018 Sky Rich Star Limited. All rights reserved.
The Honeywell Trademark is used under license
from Honeywell International Inc.
Honeywell International Inc. makes no
representations or warranties with respect
to this product. This product is manufactured for
Sky Rich Star Limited.

Honeywell

8.5"

11"

5 YEAR LIMITED WARRANTY

You should read all of the instructions before attempting to use Honeywell LED lighting and light bulb products.

Sky Rich Star Limited (SRS) warrants Honeywell LED lighting and light bulb products against defects in material or workmanship for a period of five (5) years from the date of original purchase. SRS agrees to either repair the product or replace it, at the sole discretion of SRS. Only the original purchaser of Honeywell LED lighting and light bulb products are extended this warranty. No warranty work will be provided under this warranty without purchaser's receipt or other proof of the date of original purchase acceptable to SRS. Proof of the date of purchase must be provided to SRS if the product is returned. Purchasing Honeywell LED lighting and light bulb products from a third party vendor negates all warranties (expressed or implied) in this warranty. The warranty does not apply to the following terms/conditions:

1.) Acts of God,
2.) Products that have been subjected to unauthorized repair, opened, disassembled, and/or otherwise modified,
3.) Products used not in accordance with directions,
4.) Damages exceeding the total cost of product,
5.) Plastic or plastic shades,
6.) The finish of any portion of the product (i.e. surface scratches, weathering, corrosion, discoloration of brass components, as this is considered normal wear and tear).
7.) Damages caused by shipping, improper handling, accident, misuse or abuse. SRS is not responsible for damage of merchandise in transit. Repaired or replaced products shall be subject to the terms of this warranty and are inspected prior to return shipment. Damages that are incurred during transit should be reported at once to the carrier and a claim should be filed with them.

SRS SHALL NOT BE LIABLE FOR INCIDENTAL, SPECIAL OR CONSEQUENTIAL DAMAGES RESULTING FROM THE USE OF THE PRODUCT OR ARISING OUT OF ANY BREACH OF THIS WARRANTY. ALL IMPLIED WARRANTIES, IF ANY, INCLUDING IMPLIED WARRANTIES OF MERCHANTABILITY AND FITNESS FOR A PARTICULAR PURPOSE, ARE LIMITED IN DURATION TO THE DURATION OF THIS EXPRESS WARRANTY. Some states do not allow the exclusion or limitation of incidental or consequential damages, or limitations on how long an implied warranty lasts, so the above exclusions or limitations may not apply to you. No other warranty, written or verbal, will be honored for this product. This warranty grants you specific legal rights, you may also have other rights which vary from state to state. There are no other warranties except those stated above.

Thank You
Should you require any assistance for a Honeywell LED lighting or light bulb product please call our Toll Free Number 1-877-723-0723
8:00 A.M. - 5:00 P.M. Central Time, Monday - Friday
Email us at: customerservice@idctexas.com

You will need the following information:
Model/Item Number of Product, Receipt, and Date of Purchase
All drawings and text are © copyright of Sky Rich Star Limited.

PARTS AND SPECIFICATIONS

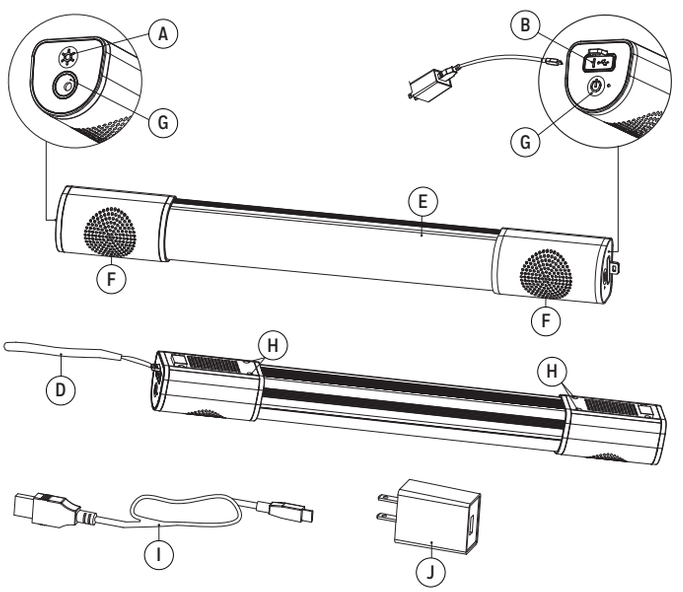

A) Work Light, Beam Ligh Power
B) Charging Port
C) Beam Light
D) Lanyard
E) Work Light
F) Bluetooth Speakers
G) Bluetooth Activation
H) Magnets
I) Micro USB Cable
J) USB Power Adapter

MOUNTING INSTRUCTIONS

Magnets:
Powerful magnetics attach to any ferrous metal surface

OPERATING INSTRUCTIONS

NOTE: Please charge the light before operating. Insert USB into USB Power Adapter, insert Micro USB Cable into light and insert USB Power Adapter into wall outlet.

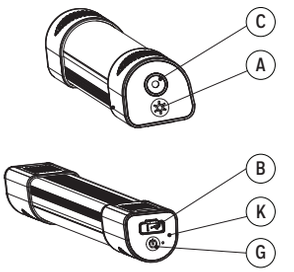

HOW TO OPERATE WORK LIGHT AND BEAM LIGHT:
1. Press Work Light Power Button (A) once for High Light Output (600lm), press again for Medium Light Output (300lm), press again for Low Light Output (100lm) and press again for strobe function. Press again to turn light off.
2. To activate beam light (C), hold down Work Light power button (A) for 2 seconds and press again to turn off.

HOW TO OPERATE BLUETOOTH SPEAKER POWER :
1. Press Bluetooth Activation button (G) for 2 seconds to turn on speaker.
2. Bluetooth Speaker will enter pairing mode. Activate bluetooth on your device and find device named A03HW061C-AL. Press to pair.
3. Press Bluetooth Activation button (G) for 2 seconds to turn off speaker.
4. Press Bluetooth Activation button (G) quickly to pause or play music.

DUAL-COLOR INDICATOR LIGHT INSTRUCTIONS :
1. Light will be red while charging and will turn off upon unit reaching a full charge.
2. When Bluetooth is activated, light will slow flash during pairing mode and solid blue when paired.

SAFETY INFORMATION

WARNING
1. This product is not a toy and contains small parts. Close supervision is necessary when this unit is used near children.
2. To reduce the risk of electrical shock, do not put the unit in water or other liquid. For cleaning, use a soft dry cloth. Do not place or store appliance where it can fall or be pulled into a tub or sink.

NOTE:
This equipment has been tested and found to comply with the limits for a Class B Digital Device, pursuant to Part 15 of the FCC Rules. These limits are designed to provide reasonable protection against harmful interference in a residential installation. This equipment generates, uses, and can radiate radio frequency energy and, if not installed and used in accordance with the instructions, may cause harmfull interference to radio communications. However, there is no guarantee that interference will not occur in a particular installation. If this equipment does cause harmful interference to radio or television reception, which can be determined by turning the equipment off and on, the user is encouraged to try to correct the interference by one or more of the following measures:
- Reorient or relocate the receiving antenna.
- Increase the distance between the equipment and receiver.
- Connect the equipment to an outlet on a circuit different from that which the receiver is connected.
- Consult the dealer or an experienced radio/TV technician for help.

This equipment complies with Part 15 of the FCC Rules. Operation is subject to the following two conditions:
1) This device may not cause harmful interference.
2) This device must accept any interference received,including interference that may cause undesired operation.

WARNING:
Changes or modifications to this unit not expressly approved by the party responsible for compliance could void the user's authority to operate the equipment.