Fold 17” Fold

TROUBLE SHOOTING

PROBLEM	POSSIBLE CAUSE	SOLUTION
Light will not come on.	A. Light switch is turned off. B. Fuse is blown or circuit breaker is turned off. C. Incorrect circuit wiring. D. Defective switch.	A. Turn light switch on. B. Replace fuse or turn circuit breaker on. C. Verify that fixture is wired properly. D. Test or replace the switch.
The fuse blows or circuit breaker trips when the light is turned on.	The wires are crossed or the power wire is grounded out.	Check the wiring connections.
Remote will not work.	A. Battery is not installed correctly. B. Battery energy is not enough.	A. Reinstall the battery. B. Replacing 2 AAA Batteries. For questions, go to www. honeywellledlighting.com or call SRS customer service.

FCC WARNING:

WARNING: Changes or modifications to this unit not expressly approved by the party responsible for compliance could void the user authority to operate the equipment.

****

11”

This device complies with Part 15 of the FCC Rules. Operation is subject to the following two conditions:
(1) this device may not cause harmful interference, and
(2) this device must accept any interference received, including interference that may cause undesired operation.

NOTES: This equipment has been tested and found to comply with the limits for a Class B digital device, pursuant to Part 15 of the FCC Rules. These limits are designed to provide reasonable protection against harmful interference in a residential installation. This equipment generates, uses and can radiate radio frequency energy and, if not installed and used in accordance with the instructions, may cause harmful interference to radio communications.

However, there is no guarantee that interference will not occur in a particular installation. If this equipment does cause harmful interference to radio or television reception, which can be determined by turning the equipment off and on, the user is encouraged to try to correct the interference by one or more of the following measures:

- Reorient or relocate the receiving antenna.
- Increase the separation between the equipment and receiver.
- Connect the equipment into an outlet on a circuit different from that to which the receiver is connected.
- Consult the dealer or an experienced radio/TV technician for help.

Sky Rich Star Limited
UNIT E, 10/F, WORLDWIDE CENTRE,
123 TUNG CHAU STREET, TAI KOK TSUI,
KL, HONG KONG
Toll-free: 1-877-723-0723

Made in China
© 2019 Sky Rich Star Limited, all rights reserved.
The Honeywell Trademark is used under license from Honeywell International Inc.
Honeywell International Inc. makes no representations or warranties with respect to this product. This product is manufactured for Sky Rich Star Limited.

Honeywell

Honeywell

EN **LED 4' Ceiling Light**
Dimmable with Remote Control
Use and Care Guide
Read and Save this Instructions Before Use

Model: KT148D950120

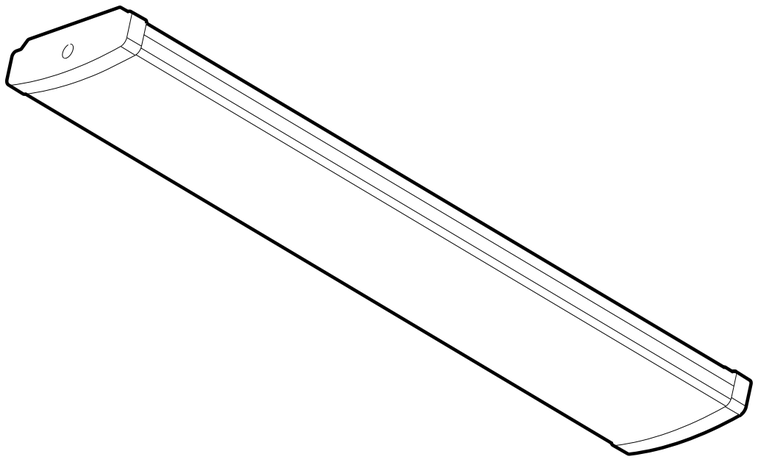

Fold Fold

Fold 17” Fold

11”

SAFETY INFORMATION

WARNING: Read all safety precautions and installation instructions carefully before installing or servicing this fixture. Failure to comply with these instructions could result in a potentially fatal electric shock, fire, and/or property damage.

IMPORTANT: lisez attentivement toutes les précautions de sécurité et les installations avant d'installer ou de réparer ce luminaire. Le non respect de ces instructions peut entraîner un choc électrique et / ou des dégâts matériels potentiellement fatals.

- To reduce the risk of electrical shock or other personal injury which could be hazardous or fatal, ensure the power is turned OFF at the fuse or breaker box before making any electrical connections or removing the old fixture.
- Changes or modifications not expressly approved by the party responsible for compliance could void the user's authority to operate the equipment.
- Must be connected to 120 volt, 60 Hz power source.
- Fixture may be directly mounted to the ceiling.
- Suitable for wall mount.
- NOT suitable for ground locations. Minimum of 4 feet or higher.
- Fixture should be installed by a qualified electrician or person experienced with household wiring. The electrical system, and method of electrical connection of the fixture, must be in accordance with the National Electrical Code and local building codes.

NOT INTENDED FOR USE WITH DIMMER SWITCHES!
NOT INTENDED FOR USE WITH EMERGENCY EXITS! NOT SUITABLE FOR WET LOCATIONS !
CONSULT A QUALIFIED ELECTRICIAN TO ENSURE CORRECT BRANCH CIRCUIT CONDUCTOR!
MINIMUM 75° C SUPPLY CONDUCTORS!

NON CONÇU POUR UNE UTILISATION AVEC DES COMMUTATEURS DIMMER!
NON PRÉVU POUR UNE UTILISATION AVEC DES SORTIES D'URGENCE! NON ADAPTÉ AUX LIEUX MOUILLÉS! CONSULTER UN ÉLECTRICIEN QUALIFIÉ POUR ASSURER UN CONDUCTEUR DE CIRCUIT DE BRANCHE APPROPRIÉ! CONDUCTEURS D'ALIMENTATION MINIMUM DE 75° C!

PRE-INSTALLATION

PLANNING INSTALLATION

- Turn off the electrical power at the fuse or circuit breaker box before installing or servicing any part of this fixture.
- If replacing a fixture, remove existing fixture and make a sketch of wiring configuration (by color) or mark wires with masking tape for identification.
- Remove the seiling light from the carton and check that all parts are included. Be careful not to misplace any of the screws or parts needed for installing the fixture.
- Diffuser is fragile. Carefully set aside in a safe location to avoid damage until ready to be installed.

HARDWARE INCLUDED

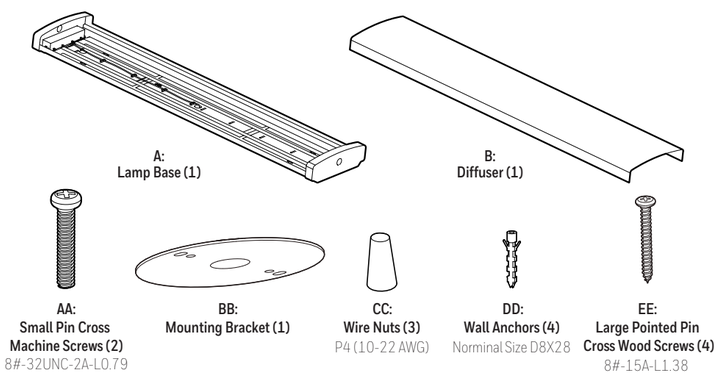

INSTALLATION

IMPORTANT: Do not use with dimmers or timers.

CAUTION: Before beginning installation turn off the circuit breaker and light switch.

STEP 1

Press one end of diffuser (B) and slide the diffuser (B) to the same side, ensure the diffuser is open from other side (A) and remove the diffuser . (Figure 1)

Figure 1

STEP 2

The lamp base (A) is manufactured with 3 knockout holes to provide flexibility during installation. If one of the Stand-By Knockout locations is used the wire may require additional trimming or extension. After selecting desired knockout location bend back the knockout tab (may require screwdriver to loosen), feed the connection wire through one of the knock out holes and slide connection wire beneath metal tabs. Bend tabs to hold wire in place. (Figure 2)

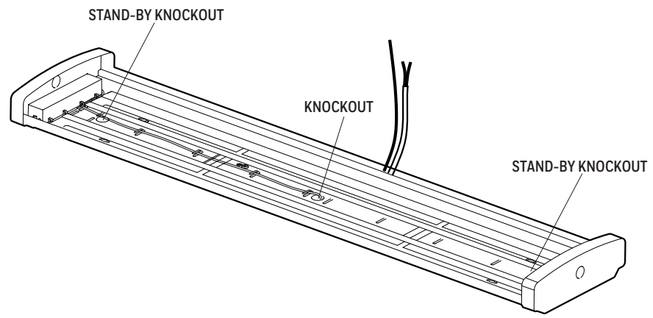

Figure 2

Mount the mounting bracket (BB) to the junction box and secure using the 2 small machine screws (AA). Connect the supply AC wires to the corresponding fixture wires (BLACK to BLACK, WHITE to WHITE and GROUND to GROUND) in the junction box and secure using wire nuts (CC). (Figure 2)

RECOMMENDED: Wrap each wire nut with electrical tape (not included) after wires have been attached.

NOTE: The screws and nuts that are pre-installed on the mounting bracket (BB) should be test fitted to ensure only 3/16" of thread is exposed in order to firmly install lamp.

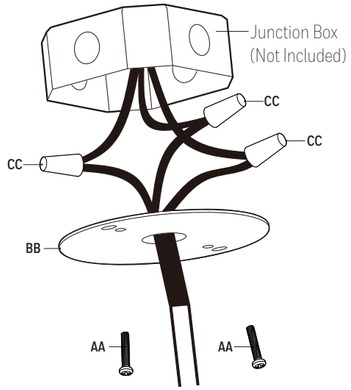

Figure 3

INSTALLATION

STEP 3

Mark 4 hole locations by holding fixture to wall or ceiling. For installation into drywall, drill a 1/4 in. pilot hole into the marked screw locations. Insert wall anchors (DD). Once the wall anchors have been inserted into pre-drilled holes, replace fixture over hole locations and slightly tighten screws (EE) into wall anchors. For installation into wood use the included screws. Slide the lamp base (A) over until the narrow legs of the keyhole slots are under the heads of the screws (EE). Finish tightening the screws (EE) until they are firmly seated and the lamp base (A) is tightly secured to the mounting surface. (Figure 4)

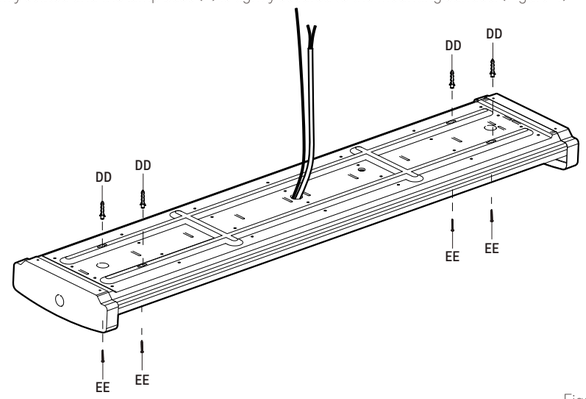

Figure 4

STEP 4

Insert and press one end of the diffuser (B) into the lamp base (A), making sure that the diffuser (B) is completely placed on the lamp base (A), slide the diffuser (B) to the other end. Restore power to the fuse box and turn light switch on to activate the fixture. (Figure 5)

NOTE: If you want to re-open the diffuser after installnation. Please hold the diffuser carefully for is easy to fall drop.

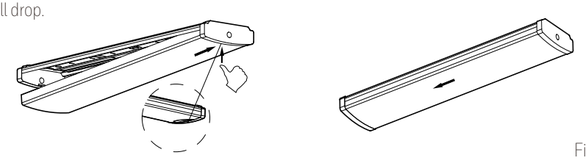

Figure 5

REMOTE CONTROL

POWER
Turns Ceiling Light On and Off

GROUP SETUP AND ACTIVATION

DIMMER
Preset brightness levels will adjust light to either 25%, 50%, 75% or 100% brightness level.

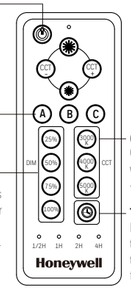

CCT SELECTOR
Color Temperature Presets will set light to 3000k (Warm White), 4000k (Cool White) or 5000k (Daylight)

TIMER FUNCTION
Pressing timer button once will set timer to 1/2 hour, twice to 1 hour, three times to 2 hours and 4 times for 4 hours. Pressing 5 times will cancel timer function.

REMOTE IS INTENDED FOR DRY LOCATIONS

BATTERY
Requires 2 AAA Batteries (included)
Warning:
Do not mix old and new batteries and do not mix alkaline, standard (carbon-zinc) or rechargeable (nickel cadmium, nickel metal hydride, etc.) batteries.

REMOTE CONTROL OPERATION
- The remote control unit will operation lights within 19ft-32.8ft (6-10m) range.
- Install batteries and point remote towards the ceiling light to activate light fixture.
- Use the GROUP SETUP AND ACTIVATION, DIMMER, CCT SELECTOR,TIMER functions by pointing the remote control towards the ceiling light and selecting the desired function.

GROUP SETUP AND ACTIVATION SET-UP
NOTE: The ceiling light is factory paired to Group A. One contorller for one light only.
1. If you have more than 2 lights, you can create and linked as 1 or more groups. To add new lights to a group (A/B/C), go to step 2 and repeat procedure for each light. You can control multiple lights or groups of lights with a single controller as long as lights are within range (6-10 meters) of the controller.
2. Before you turn on the circuit breaker, press and hold one of the group set up buttons (A/B/C), then turn on circuit breaker. When the ceiling light has flash 4times. It means paired successful.
3. Once paired, you can use the (A/B/C) buttons to activate the light or group of lights. You can also select desired brightness, CCT and set timers.

Fold Fold