TEST REPORT

Product Name	:	5 in 1 Magnetic Wireless Power Bank Station
Brand Name	:	ESORUN
Model	:	StandUP TM10000
Series Model	:	StandUP TM20000
FCC ID	:	2AP2N-UPTM
Applicant	:	**Shenzhen Esorun Technology Co., LTD**
Address	:	Room 226, Building A, B, C, Zone B, Yuanfen Industrial Zone, Taoyuan Community, Dalang Street, Longhua District, Shenzhen
Manufacturer	:	**Shenzhen Esorun Technology Co., LTD**
Address	:	Room 226, Building A, B, C, Zone B, Yuanfen Industrial Zone, Taoyuan Community, Dalang Street, Longhua District, Shenzhen
Standard(s)	:	FCC CFR 47 PART 1, § 1.1310 KDB 680106 D01 Wireless Power Transfer v04
Date of Receipt	:	Dec. 31, 2024
Date of Test	:	Jan. 02, 2025~ Jan. 15, 2025
Issued Date	:	Jan. 15, 2025

Issued By: **Guangdong Asia Hongke Test Technology Limited**
B1/F, Building 11, Junfeng Industrial Park, Chongqing Road, Heping Community, Fuhai Street, Bao'an District, Shenzhen, Guangdong, China
Tel.: +86 0755-230967639 Fax.: +86 0755-230967639

Reviewed by: Leon Yi
Leon.yi

Approved by: Sean She
Sean She

GUANGDONG ASIA TEST TECHNOLOGY LIMITED AiT TEST REPORT

Note: This device has been tested and found to comply with the standard(s) listed, this test report merely corresponds to the test sample. It is not permitted to copy extracts of these test result without the written permission of the test laboratory. This report shall not be reproduced except in full, without the written approval of Guangdong Asia Hongke Test Technology Limited. If there is a need to alter or revise this document, the right belongs to Guangdong Asia Hongke Test Technology Limited, and it should give a prior written notice of the revision document. This test report must not be used by the client to claim product endorsement.

Report Revise Record

Report Version	Issued Date	Notes
M1	Jan. 15, 2025	Initial Release

Contents

1 GENGENERAL INFORMATION 4

1.1 ENVIRONMENTAL CONDITIONS 4
1.2 GENERAL DESCRIPTION OF EUT 4
1.3 TEST FACILITY 5
1.4 MEASUREMENT UNCERTAINTY 5
2.1 DESCRIPTION OF THE TEST MODE 6
2.2 SPECIAL ACCESSORIES 7
2.3 TEST INSTRUMENTS LIST 7
2.3.1 Calibration Information 7
2.3.2 MAGPy probe information 7

3 TEST CONDITIONS AND RESULTS 8

3.1 APPLICABLE STANDARD 8
3.2 LIMIT 8
3.3 TEST SETUP 8
3.4 MEASUREMENT PROCEDURE 9
3.5 TEST RESULT OF E AND H FIELD STRENGTH 10
3.5.1 Duty Cycle 10
3.5.2 For mobile exposure condition: 12
3.5.3 For portable exposure condition: 15
3.6 EQUIPMENT APPROVAL CONSIDERATIONS 19
3.7 CONCLUSION 19

4 TEST SETUP PHOTOGRAPHS OF EUT 20

1 GENGENERAL INFORMATION

1.1 Environmental conditions

During the measurement the environmental conditions were within the listed ranges:

Normal Temperature:	25°C
Relative Humidity:	55 %
Air Pressure:	101 kPa

1.2 General Description of EUT

Product Name:	5 in 1 Magnetic Wireless Power Bank Station
Model/Type reference:	StandUP TM10000
Power Supply:	DC 5V/9V from adapter with AC 120V/60Hz, DC 3.7V from battery Type-C Input: 5V⎓2.6A, 9V⎓2A Micro USB Input: 5V⎓2A, 9V⎓2A USB-A Output: 5V⎓3A, 9V⎓2A, 12V⎓1.5A Type-C Output: 5V⎓2.4A, 9V⎓2.22A, 12V⎓1.67A Wireless Output: 5W, 7.5W, 10W, 15W Airpods Output: 5W iWatch Output: 2W Simultaneous Output: 5V⎓3A
Hardware version:	N/A
Software version:	N/A
Sample(s) Status:	AiTSZ-241231003-1(Normal sample) AiTSZ-241231003-2(Engineer sample)
Wireless Charger:	
Operation frequency:	Coil1: For Phone: 115kHz-205kHz Coil2: For Earphone: 115kHz-205kHz Coil3: Watch: 325kHz
Modulation Technology:	MSK
Antenna Type:	Loop coil Antenna
Antenna gain:	0dBi
Remark: The above DUT's information was declared by manufacturer. For more detailed features description, please refer to the manufacturer's specifications or the User's Manual.	

1.3 Test Facility

Test Laboratory:

Guangdong Asia Hongke Test Technology Limited
B1/F, Building 11, Junfeng Industrial Park, Chongqing Road, Heping Community, Fuhai Street, Bao'an District, Shenzhen, Guangdong, China

The test facility is recognized, certified or accredited by the following organizations:
FCC-Registration No.: 251906 Designation Number: CN1376
Guangdong Asia Hongke Test Technology Limited has been registered and fully described in a report filed with the (FCC) Federal Communications Commission. The acceptance letter from the FCC is maintained in our files.

IC —Registration No.: 31737 CAB identifier: CN0165
The 3m Semi-anechoic chamber of Guangdong Asia Hongke Test Technology Limited has been registered by Certification and Engineering Bureau of Industry Canada for radio equipment testing with Registration No.: 31737

A2LA-Lab Cert. No.: 7133.01
Guangdong Asia Hongke Test Technology Limited has been accredited by A2LA for technical competence in the field of electrical testing, and proved to be in compliance with ISO/IEC 17025: 2017 General Requirements for the Competence of Testing and Calibration Laboratories and any additional program requirements in the identified field of testing.

1.4 Measurement uncertainty

The data and results referenced in this document are true and accurate. The reader is cautioned that there may be errors within the calibration limits of the equipment and facilities. The measurement uncertainty was calculated for all measurements listed in this test report according to CISPR 16 - 4 “Specification for radio disturbance and immunity measuring apparatus and methods – Part 4: Uncertainty in EMC Measurements” and is documented in the Guangdong Asia Hongke Test Technology Limited’s quality system according to DIN EN ISO/IEC 17025. Furthermore, component and process variability of devices similar to that tested may result in additional deviation. The manufacturer has the sole responsibility of continued compliance of the device.
Hereafter the best measurement capability for Asia Hongke laboratory is reported:

Test	Range	Measurement Uncertainty	Notes
Magnetic field expanded uncertainty	3KHz-10MHz	3.58dB	(1)
Electric Field expanded uncertainty	3KHz-10MHz	2.41dB	(1)

The report uncertainty of measurement y ± U, where expended uncertainty U is based on a standard uncertainty Multiplied by a coverage factor of k=2, providing a level of confidence of approximately 95%.

2.1 Description of the test mode

Equipment under test was operated during the measurement under the following conditions:
☒ Charging and communication mode

Test Modes:		
Mode 1	EUT + phone (Battery Status: < 1%)	Record
Mode 2	EUT + phone (Battery Status: < 50%)	Pre-tested
Mode 3	EUT + phone (Battery Status: < 99%)	Pre-tested
Mode 4	Stand-by mode.	Pre-tested
Note 1: Above 4 modes were test for portable exposure condition. Note 2: In general portable use condition, it is unlikely used for earphone charging or watch charging or two or three device charge simultaneously, on the other hand the output power of phone port is higher than earphone and watch port. So only phone port loaded for portable use condition evaluation. Note 3: All test modes were pre-tested, but we only recorded the worst case in this report.		
Test Modes:		
Mode 4	AC/DC Adapter+ EUT + Earphone + Watch + phone(Battery Status:< 1%)	Record
Mode 5	AC/DC Adapter+ EUT + Earphone + Watch + phone(Battery Status:< 50%)	Record
Mode 6	AC/DC Adapter+ EUT + Earphone + Watch + phone(Battery Status:< 99%)	Record
Mode 7	AC/DC Adapter+ EUT + phone(Battery Status:< 1%)	Pre-tested
Mode 8	AC/DC Adapter+ EUT + phone(Battery Status: < 50%)	Pre-tested
Mode 9	AC/DC Adapter+ EUT + phone(Battery Status: < 99%)	Pre-tested
Mode 10	AC/DC Adapter+ EUT + Earphone	Pre-tested
Mode 11	AC/DC Adapter+ EUT + Watch	Pre-tested
Mode 12	AC/DC Adapter+ EUT + phone + Earphone	Pre-tested
Mode 13	AC/DC Adapter+ EUT + phone + Watch	Pre-tested
Mode 14	AC/DC Adapter+ EUT + Earphone + Watch	Pre-tested
Mode 15	Stand-by mode.	Pre-tested
Note 1: Above 12 modes were test for mobile exposure condition. Note 2: All test modes were pre-tested, but we only recorded the worst case in this report.		

2.2 Special Accessories

Follow auxiliary equipment(s) test with EUT that provided by the manufacturer or laboratory is listed as follow:

Description	Manufacturer	Model	Serial No.	Provided by	Other
Adapter	Aoda	A839-200150C-US1	/	Test lab	30W
Phone	Apple	IPhone 14	/	Test lab	15W
Watch	Apple	S6	/	Test lab	7.5W
Earphone	PocBuds	K6	/	Test lab	5W

2.3 Test Instruments list

2.3.1 Calibration Information

No	Test Equipment	Manufacturer	Model No	Serial No	Cal. Date	Cal. Due Date
1	Magnetic Amplitude and Gradient Probe System	SPEAG	MAGPy-8H3D+E3D V2.6 & MAGPy-DAS V2.6	3107 & 3097	2024.03.15	2025.03.14
2	Spectrum Analyzer	Agilent	N9020A	MY51289843	2024.09.25	2025.09.24

2.3.2 MAGPy probe information

Magnetic Amplitude and Gradient Probe System of probe MAGPy-8H3D+E3D consists of eight isotropic H-field sub probes and one isotropic E-field sub probe that are all integrated inside the probe head with a flat tip. Each isotropic H-field sub probe comprises three concentric orthogonal loop coil sensors. The isotropic E-field sub probe is composed of three orthogonal sensors (x and y sensors are dipoles and the sensor measuring the z component is a monopole). In total, the MAGPy-8H3D+E3D V2.6 probe is thus composed of nine sub probes and 27 single sensors that measure in the time-domain. The flat-tip probe design brings the sensors closer to the tip.
The probe specifications are provided in Table 2.1.

Parameter	Specs
PROBE DESIGN	
Diameter	60 mm
8 isotropic H-field sensors	concentric loops of 1 cm^2 arranged at the corner of a cube of 22 mm side length
1 isotropic E-field sensor	orthogonal dipole/monopole (arm length: 50 mm)
Measurement center	18.5 mm from the probe tip
Temperature range	0–40 °C
Dimensions	110 × 635 × 35 mm (MAGPy-8H3D+E3D V2.6 & MAGPy-DAS V2.6)
H-FIELD SPECIFICATION	
Frequency range	3 kHz–10 MHz
Measurement range	0.1–3200 A/m, 0.12 µT–4 mT
Gradient range	0–80 T/m/T
E-FIELD SPECIFICATION	
Frequency range	3 kHz–10 MHz
Measurement range	0.08–2000 V/m

Table 2.1: MAGPy-8H3D+E3D V2.6 probe specifications

3 TEST CONDITIONS AND RESULTS

3.1 Applicable Standard

According to §1.1307(b)(1), systems operating under the provisions of this section shall be operated in a manner that ensures that the public is not exposed to radio frequency energy level in excess of the Commission's guidelines.
According to §1.1310 and §2.1091 RF exposure is calculated.
According KDB 680106 D01 RF Exposure Wireless Charging App v04

3.2 Limit

Limits for Maximum Permissible Exposure (MPE)/Controlled Exposure

Frequency Range(MHz)	Electric Field Strength(V/m)	Magnetic Field Strength(A/m)	Power Density (mW/cm²)	Averaging Time (minute)
Limits for Occupational/Controlled Exposure				
0.3 – 3.0	614	1.63	(100) *	6
3.0 – 30	1842/f	4.89/f	(900/f)*	6
30 – 300	61.4	0.163	1.0	6
300 – 1500	/	/	f/300	6
1500 – 100,000	/	/	5	6

Limits for Maximum Permissible Exposure (MPE)/Uncontrolled Exposure

Frequency Range(MHz)	Electric Field Strength(V/m)	Magnetic Field Strength(A/m)	Power Density (mW/cm²)	Averaging Time (minute)
Limits for Occupational/Controlled Exposure				
0.3 – 3.0	614	1.63	(100) *	30
3.0 – 30	824/f	2.19/f	(180/f)*	30
30 – 300	27.5	0.073	0.2	30
300 – 1500	/	/	f/1500	30
1500 – 100,000	/	/	1.0	30

F=frequency in MHz
*=Plane-wave equivalent power density

3.3 Test Setup

For mobile exposure conditions:

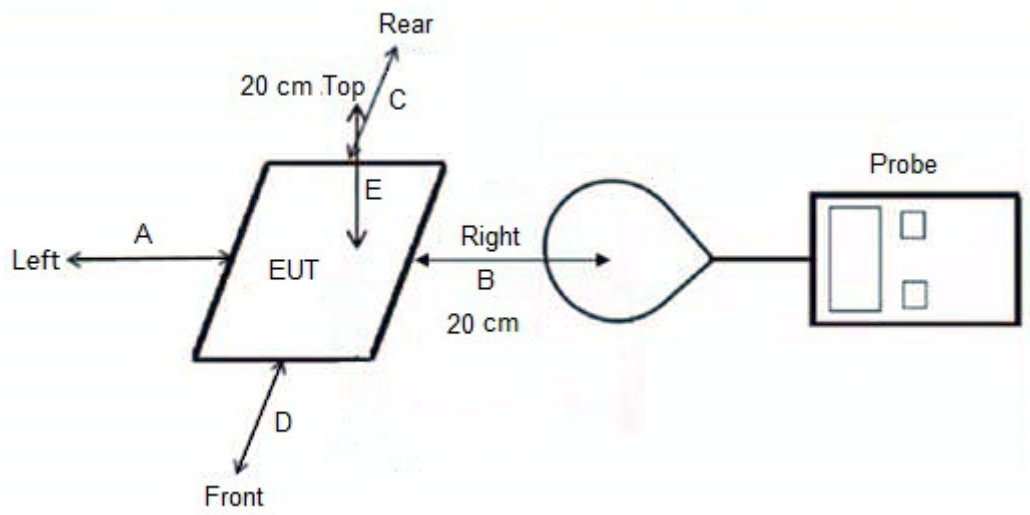

For portable exposure conditions:

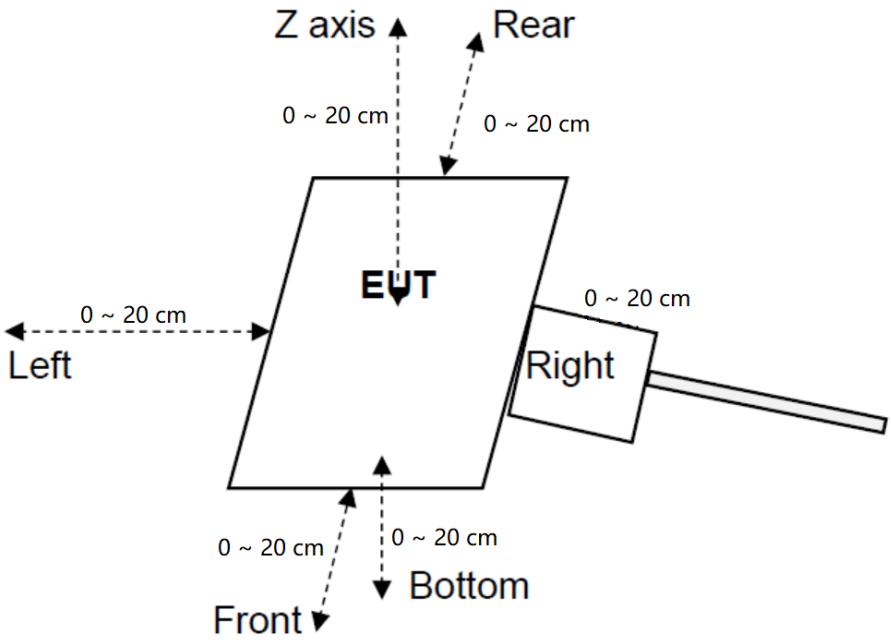

Note: A, B, C, D, E, F for six surfaces of the product.

3.4 Measurement Procedure

For portable exposure conditions:

a) The RF exposure test was performed in anechoic chamber.

b) The measurement probe was placed at test distance (20 cm from all sides) which is between the edge of the charger and the geometric centre of probe.

c) The highest emission level was recorded and compared with limit as soon as measurement of each points (A, B, C, D, E) were completed.

d) The EUT were measured according to the dictates of KDB 680106 D01 RF Exposure Wireless Charging App v04.

For portable exposure condition:

a) The RF exposure test was performed in anechoic chamber.

b) Perform H-field measurements for each edge/top surface of the host/client pair at every 2 cm, starting from as close as possible out to 20 cm

c) The highest emission level was recorded and compared with limit.

d) The EUT was measured according to the KDB 680106 D01 Wireless Power Transfer v04.

3.5 Test Result of E and H field Strength

3.5.1 Duty Cycle

Mode	ON Time(ms)	Period(ms)	Duty Cycle(%)
Phone(115kHz-250kHz)	/	/	100
earphone(115kHz-250kHz)	/	/	100
Watch(325kHz)	/	/	100

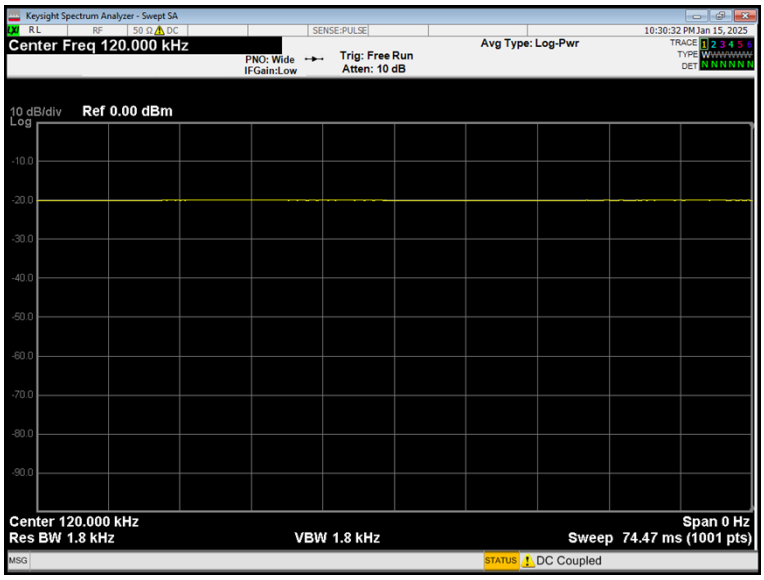

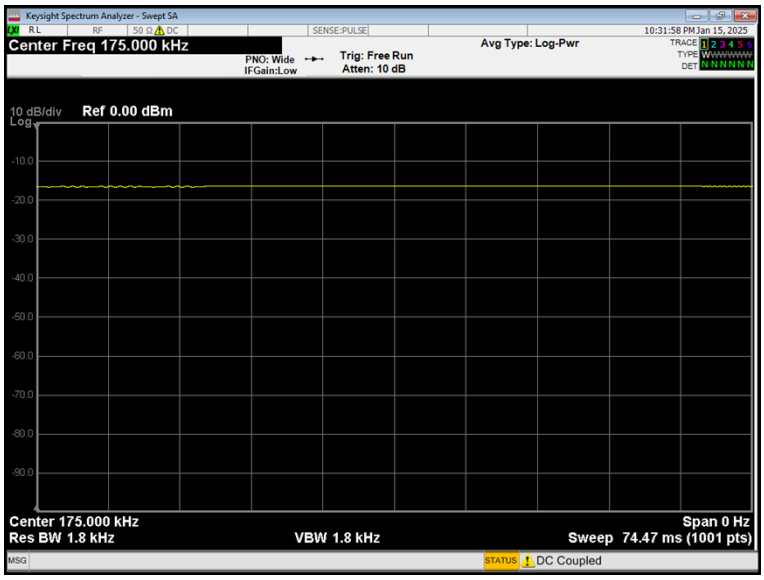

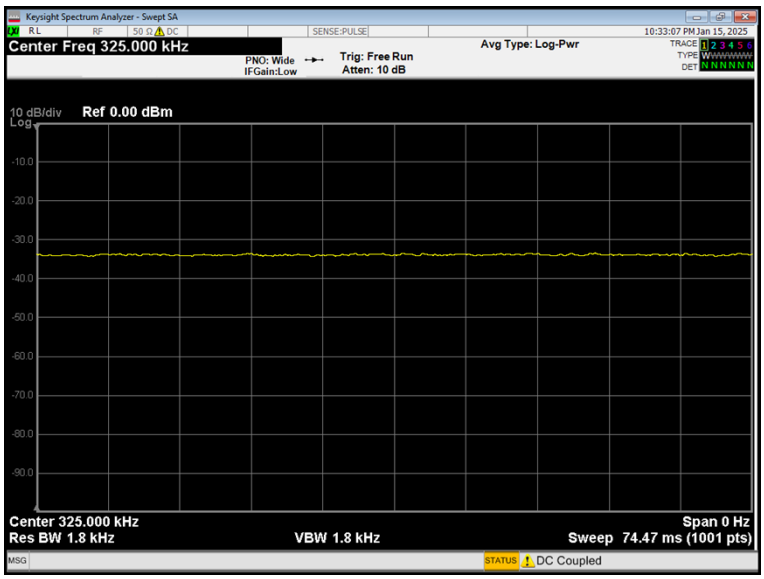
Keysight Spectrum Analyzer - Swept SA
Center Freq 325.000 kHz
PNO: Wide
IFGain:Low
Trig: Free Run
Atten: 10 dB
Avg Type: Log-Pwr
10:33:07 PM Jan 15, 2025
10 dB/div
Log
Ref 0.00 dBm
-10.0
-20.0
-30.0
-40.0
-50.0
-60.0
-70.0
-80.0
-90.0
Center 325.000 kHz
Res BW 1.8 kHz
VBW 1.8 kHz
Span 0 Hz
Sweep 74.47 ms (1001 pts)
DC Coupled

3.5.2 For mobile exposure condition:

Test Mode 4_MPE_Coil 1_Phone

Test distance	Battery levels	Probe from EUT Side	E-field (V/m)	H-field (A/m)
20cm	＜ 1%	Top	0.174	0.107
20cm	＜ 1%	Left	0.093	0.057
20cm	＜ 1%	Right	0.088	0.054
20cm	＜ 1%	Front	0.131	0.081
20cm	＜ 1%	Rear	0.139	0.085
Limit			614	1.63
Margin Limit (%)			0.03%	6.54%

Test Mode 5_MPE_Coil 1_Phone

Test distance	Battery levels	Probe from EUT Side	E-field (V/m)	H-field (A/m)
20cm	＜ 50%	Top	0.166	0.102
20cm	＜ 50%	Left	0.085	0.052
20cm	＜ 50%	Right	0.086	0.053
20cm	＜ 50%	Front	0.130	0.080
20cm	＜ 50%	Rear	0.136	0.083
Limit			614	1.63
Margin Limit (%)			0.03%	6.26%

Test Mode 6_MPE_Coil 1_Phone

Test distance	Battery levels	Probe from EUT Side	E-field (V/m)	H-field (A/m)
20cm	＜ 99%	Top	0.162	0.099
20cm	＜ 99%	Left	0.083	0.051
20cm	＜ 99%	Right	0.082	0.050
20cm	＜ 99%	Front	0.124	0.076
20cm	＜ 99%	Rear	0.130	0.080
Limit			614	1.63
Margin Limit (%)			0.03%	6.10%

Test Mode 4_MPE_ Coil 2_Earphone

Test distance	Battery levels	Probe from EUT Side	E-field (V/m)	H-field (A/m)
20cm	＜ 1%	Top	0.155	0.095
20cm	＜ 1%	Left	0.082	0.050
20cm	＜ 1%	Right	0.074	0.045
20cm	＜ 1%	Front	0.120	0.074
20cm	＜ 1%	Rear	0.125	0.077
Limit			614	1.63
Margin Limit (%)			0.03%	5.83%

Test Mode 5_MPE_ Coil 2_Earphone

Test distance	Battery levels	Probe from EUT Side	E-field (V/m)	H-field (A/m)
20cm	＜ 50%	Top	0.150	0.092
20cm	＜ 50%	Left	0.080	0.049
20cm	＜ 50%	Right	0.070	0.043
20cm	＜ 50%	Front	0.118	0.073
20cm	＜ 50%	Rear	0.118	0.072
Limit			614	1.63
Margin Limit (%)			0.02%	5.64%

Test Mode 6_MPE_ Coil 2_Earphone

Test distance	Battery levels	Probe from EUT Side	E-field (V/m)	H-field (A/m)
20cm	＜ 99%	Top	0.146	0.089
20cm	＜ 99%	Left	0.077	0.047
20cm	＜ 99%	Right	0.065	0.040
20cm	＜ 99%	Front	0.114	0.070
20cm	＜ 99%	Rear	0.112	0.068
Limit			614	1.63
Margin Limit (%)			0.02%	5.48%

Test Mode 4_MPE_ Coil 3_Earphone

Test distance	Battery levels	Probe from EUT Side	E-field (V/m)	H-field (A/m)
20cm	＜ 1%	Top	0.141	0.087
20cm	＜ 1%	Left	0.070	0.043
20cm	＜ 1%	Right	0.061	0.038
20cm	＜ 1%	Front	0.106	0.065
20cm	＜ 1%	Rear	0.108	0.066
Limit			614	1.63
Margin Limit (%)			0.02%	5.32%

Test Mode 5_MPE_ Coil 3_Earphone

Test distance	Battery levels	Probe from EUT Side	E-field (V/m)	H-field (A/m)
20cm	＜ 50%	Top	0.139	0.085
20cm	＜ 50%	Left	0.066	0.040
20cm	＜ 50%	Right	0.058	0.035
20cm	＜ 50%	Front	0.102	0.062
20cm	＜ 50%	Rear	0.100	0.061
Limit			614	1.63
Margin Limit (%)			0.02%	5.22%

Test Mode 6_MPE_ Coil 3_Earphone

Test distance	Battery levels	Probe from EUT Side	E-field (V/m)	H-field (A/m)
20cm	＜ 99%	Top	0.132	0.081
20cm	＜ 99%	Left	0.062	0.038
20cm	＜ 99%	Right	0.056	0.034
20cm	＜ 99%	Front	0.097	0.060
20cm	＜ 99%	Rear	0.097	0.060
Limit			614	1.63
Margin Limit (%)			0.02%	4.97%

Note: All test modes were pre-tested, but we only recorded the worst case in this report.

Total exposure

MPE-based total exposure ratio (Worst case):

E-field:
Coil 1+Coil 2+Coil 3 = 0.0003 + 0.0003 +0.0002 = 0.0008 < 1

H-field:
Coil 1+Coil 2+Coil 3 = 0.0654 + 0.0583 +0.0532 =0.1769 < 1

3.5.3 For portable exposure condition:

Note：

(1). The portable test modes have covered the considerations of the mobile test, only record the test data of the portable conditions in this section.

(2) Operating modes with client device (1 %, 50%, 99% battery status of client device) have been test, only show the data of worst case of 1% battery status of client device.

(3) Test performed with all the radiating structures operating at maximum power at the same time.

(4) H-field measurements are taken along all three axes the device from 0cm~20cm in 2cm minimum increment for each edge surface of the host/client pair. If the center of the probe sensing element is more than 5mm from the probe outer edge, the field strengths need to be estimated for the positions that are not reachable.

(5) According to the requirements if KDB 680106 D01 v04, If the center of the probe sensing element is located more than 5mm from the probe outer surface, the field strengths need to be estimated through modeling for those positions that are not reachable. (The sensitive elements are located approximately 18.5 mm below the external surface specified in user manual of MAGPy-8H3D+E3D V2.6)

(6) The actual 0cm field strengths need to be estimated for the positions that are not reachable via numerical calculation.

(7) Use Biot-Savart formula theory to estimate the strength of the magnetic field that the measuring instrument cannot measure. According to Biot-Savart formula:

Top & Bottom Side:

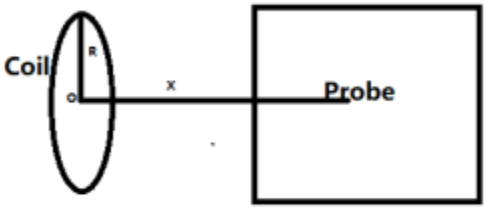

$$B = \frac{\mu_0 * I * N * R^2}{2 * (R^2 + x^2)^{3/2}}$$

Front, left, right & rear Side:

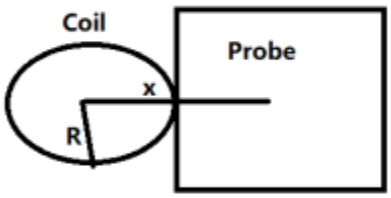

$$B = \frac{\mu_0 * I * N}{2 * x}$$

B(Unit:A/m): means H-field value;

μ0 is space permeability; μ0=4π*10^{-7};

I(Unit:A)：A current element passing through a radiated coil；

R(Unit:m)：means the Radius of radiated coil, according to provided Antenna specification: R=0.20m;

Test Distance(Unit:m)：The distance from the sensing element of the probe to the edge of the device surface.

x(Unit:m): means the center of the coil to the sensing elements of the probe. (x=test distance+R)

N: Number of turns, according to providing “Antenna specification” files: N=10.

(8) For validation purposes: If the value to show a 30% agreement between the mode and the probe measurements for the two closest points to the device surface, and with 2cm increments. Then this extrapolation method is reasonable.

Coil Parameter:

Phone coil

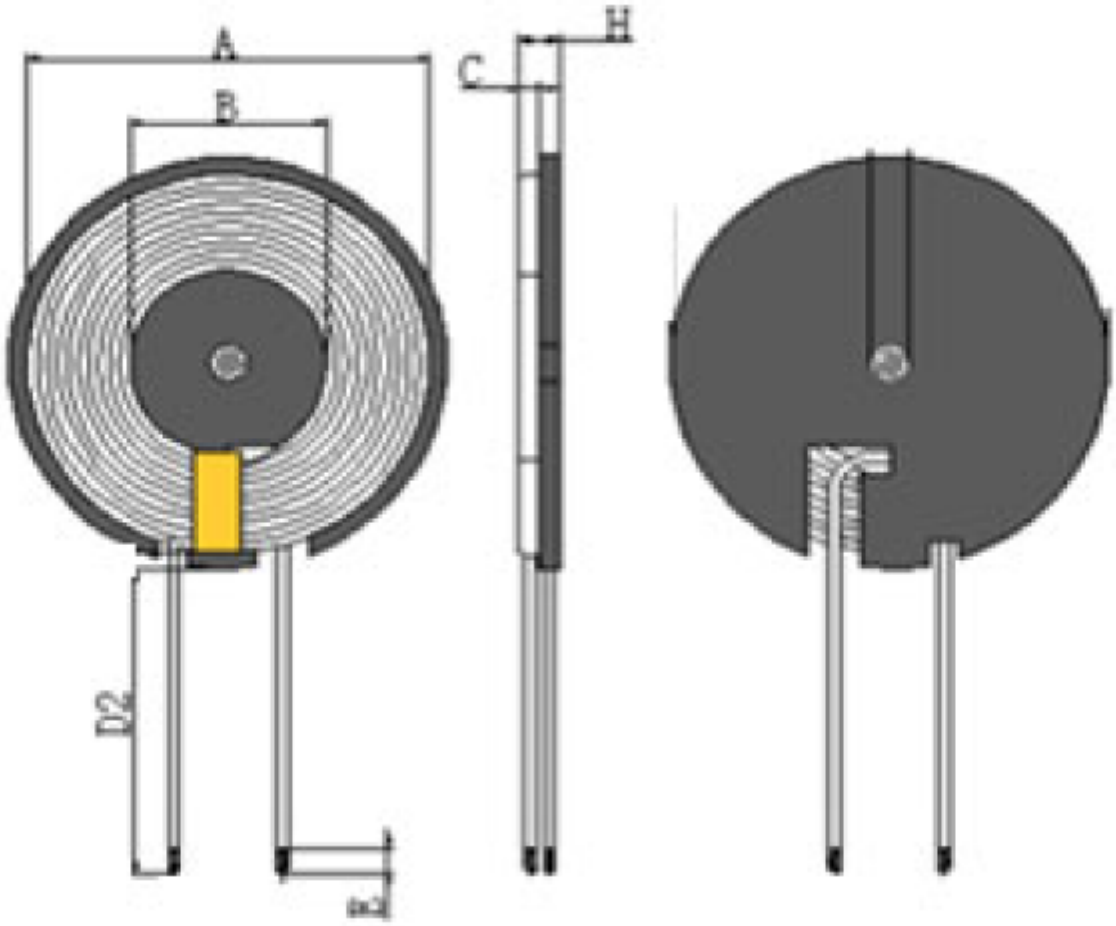

Unit: mm

A	B	C	D2	E	H
40.0±0.5	19±0.5	0.8±0.1	30±2	3±2	2.2MAX

Antenna Location(s)

The distance from the antenna to each surface of the product's casing as follow:

Position	Front A	Rear B	Left C	Right D	Top E	Bottom F
Phone coil	15mm	15mm	55mm	55mm	3mm	22mm

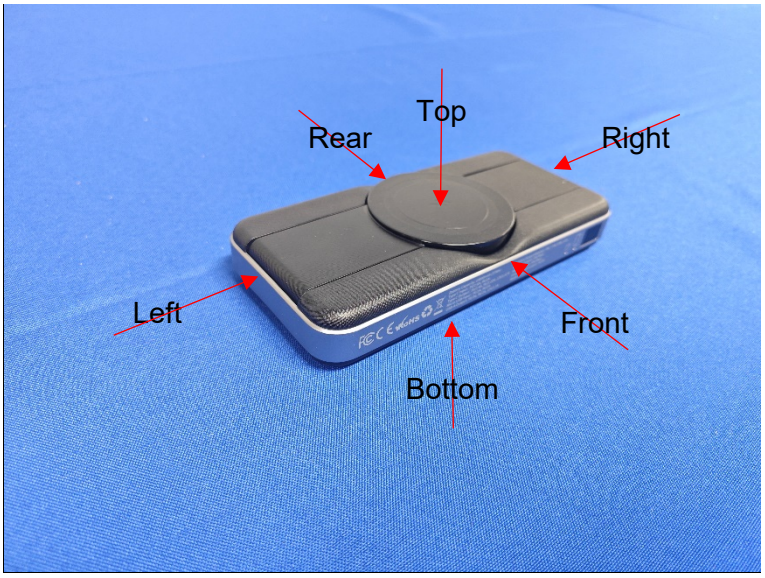

H-Field Strength result

Note: <1%, 50%, >95% load all have been tested, only worse case Max load (<1%) is reported. H-Filed Strength at (distance 0cm to 20cm at 2cm iteration, i.e. at a distance of 20cm, 18cm, 16cm, 0cm, which is between the edge of the charger edge and the probe's tip) surrounding the EUT (A/m).

Test Distance (cm)	Test Position A (A/m)	Test Position B (A/m)	Test Position C (A/m)	Test Position D (A/m)	Test Position E (A/m)	Test Position F (A/m)	Limit (A/m)
2	0.116	0.169	0.078	0.076	0.410	0.122	1.63
4	0.108	0.112	0.075	0.073	0.144	0.051	
6	0.107	0.104	0.071	0.073	0.144	0.050	
8	0.100	0.099	0.066	0.069	0.134	0.048	
10	0.090	0.096	0.063	0.068	0.121	0.048	
12	0.087	0.088	0.059	0.066	0.117	0.047	
14	0.086	0.085	0.057	0.061	0.117	0.043	
16	0.083	0.079	0.052	0.061	0.111	0.043	
18	0.075	0.073	0.048	0.058	0.101	0.041	
20	0.068	0.072	0.046	0.053	0.093	0.041	

Use the Biot-Sacart Law to estimate the results of 2cm through 4cm.

Test position	Measure Value (A/m)	Estimated Value (A/m)	Agreement Ratio	Limits
A	0.116	0.147	-21.50%	30%
B	0.169	0.153	10.41%	30%
C	0.078	0.091	-14.93%	30%
D	0.076	0.088	-14.22%	30%
E	0.410	0.542	-24.53%	30%
F	0.122	0.140	-13.54%	30%

As the model is sufficient, the 0cm value can be estimated through the results of 2 cm.

Test position	Estimated Value (A/m)	Limits (A/m)
A	0.182	1.63
B	0.266	
C	0.099	
D	0.096	
E	1.404	
F	0.467	

3.6 Equipment Approval Considerations

The EUT does comply with KDB 680106 D01 as follow table.

Requirements of KDB 680106 D01	Yes / No	Description
The power transfer frequency is below 1 MHz.	Yes	The device operate in the frequency range is below 1MHz.
The output power from each transmitting element (e.g., coil) is less than or equal to 15 watts.	Yes	The maximum output power of the transmitting element is 15W
A client device providing the maximum permitted load is placed in physical contact with the transmitter (i.e., the surfaces of the transmitter and client device enclosures need to be in physical contact)	Yes	Client device is placed directly in contact with the transmitter.
Only § 2.1091-Mobile exposure conditions apply (i.e., this provision does not cover § 2.1093-Portable exposure conditions).	No	Mobile and Portable exposure conditions.
The E-field and H-field strengths, at and beyond 20 cm surrounding the device surface, are demonstrated to be less than 50% of the applicable MPE limit,	Yes	The E-field and H-field strengths at and beyond 20 cm surrounding the device from all simultaneous transmitting coils are demonstrated to be less than 50% of the MPE limit.
For systems with more than one radiating structure, the conditions specified in (5) must be met when the system is fully loaded.	Yes	The configure the system is fully loaded.

3.7 Conclusion

For Mobile exposure conditions, the detected emissions with a distance of 20cm surrounding the device are below the FCC E-Field Strength & H-Field Strength limits; and comply with the requirements of FCC KDB 680106 D01.

For Portable exposure conditions, a minimum safety distance of 0 cm to the antenna is required when the device is charging a smart phone for portable exposure. The detected emissions are below the limitations according FCC KDB 680106 D01.

4 Test Setup Photographs of EUT

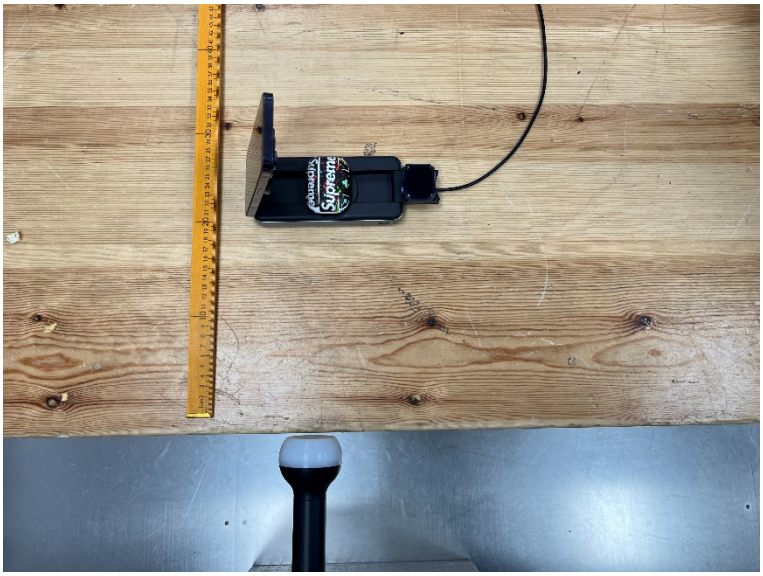

********** End of Report **********