Zalpha User Manual

Release 1.1.0

DF Automation and Robotics (M) Sdn. Bhd.

Aug 28, 2018

CONTENTS:

1 Preface **2**
- 1.1 Introduction . . . 2
- 1.2 Manual Instructions . . . 3
- 1.3 Warning Symbols and Notes in This Manual . . . 3
- 1.4 Definition . . . 3
- 1.5 More Information . . . 4

2 Safety **5**
- 2.1 Introduction . . . 5
- 2.2 Validity and Responsibility . . . 5
- 2.3 Intended Use . . . 6
- 2.4 Risk Assessment . . . 6

3 Zalpha AGV **7**
- 3.1 Introduction . . . 7
- 3.2 Packaging Details . . . 7
- 3.3 Modules of Zalpha . . . 9
- 3.4 Panel of Zalpha . . . 9
- 3.5 Charging Contact and Charging Station . . . 11
- 3.6 Getting Started . . . 14
- 3.7 Safety Features . . . 15
- 3.8 Track . . . 29
- 3.9 Charging Station . . . 32
- 3.10 ExpansionIO . . . 35

4 Warranties and Disclaimer **41**
- 4.1 Warranties . . . 41
- 4.2 Disclaimer . . . 41

5 Troubleshooting & FAQ **43**

6 Services and Maintenances **44**

7 Technical Specifications **45**
7.1 Dimension of Zalpha 45
7.2 Dimension of Zalpha with Extension Module 46
7.3 Dimension of Charging Station 46
7.4 Charging Station Mounting Drilling Dimension 47
7.5 Payload Handling Module Mounting Holes for Zalpha 48
7.6 Payload Handling Module Mounting Holes for Zalpha with Extension Module . . 48
7.7 Charger and Battery Specification 49

Copyright Notice:

The information contained herein is the property of DF Automation & Robotics (M) Sdn. Bhd., and shall not be reproduced in whole or in part without prior written approval of DF Automation & Robotics (M) Sdn. Bhd. The information herein is subject to change without notice and should not be construed as a commitment by DF Automation & Robotics (M) Sdn. Bhd. The documentation is periodically reviewed and revised. DF Automation & Robotics (M) Sdn. Bhd., assumes no responsibility for any errors or omissions in the documentation. Please submit your suggestion or improvement to support@dfautomation.com.my.

This manual explains the handling and operating procedures, as well as warning information for the Automated Guided Vehicle Model Zalpha AGV. To take full advantage of the features of this unit, read this manual thoroughly before using it. Store this manual where it can easily be referenced by anyone using this unit.

Designed and Made in Malaysia.

CHAPTER

ONE

PREFACE

1.1 Introduction

Congratulations on the purchase of your Zalpha AGV by DF Automation & Robotics (M) Sdn. Bhd.

Fig. 1.1: Zalpha_AGV.

The DF Zalpha AGV (Automated Guided Vehicle) is a mobile robot that can be used to transport many different types of material including pallets, rolls, racks, carts, trolleys and containers. DF Zalpha AGV is configurable to use different navigation methods - magnetic track guided, colour track guided or even trackless laser guided. However, only magnetic track guide model will be covered in this manual. With our NavWiz system, the automation of materials transportation will be in-a-snap-of-finger.

1.2 Manual Instructions

The manual contains instructions for installing and using the Zalpha AGV. It consists of Zalpha AGV specification. This manual is intended for the integrator who is expected to have a basic level of mechanical and electrical knowledge. It is also helpful, though not necessary, to be familiar with elementary concepts of programing. No special knowledge about AGV in general or DF Automation & Robotics is required.

1.3 Warning Symbols and Notes in This Manual

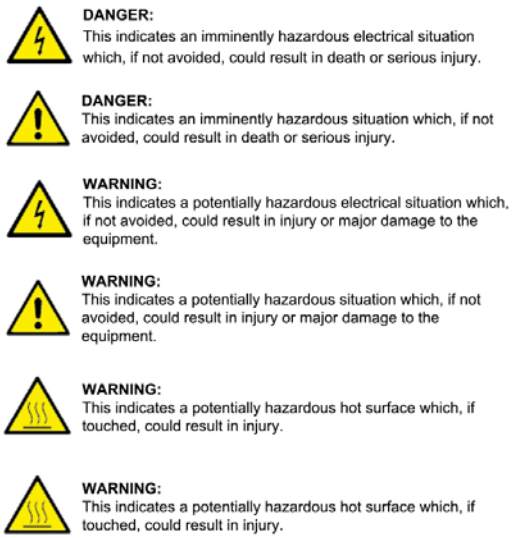

Fig. 1.2: Warning Symbols

Note Notes provide supplementary information, emphasize a point or procedure, or give a tip for easier operation.

1.4 Definition

Zalpha Zalpha refers to the robot itself. It includes the body module, left and right drive modules, battery, front and rear sensor modules and panel module.

Module Zalpha AGV is combination of several module, each module serves different function for the robot. For example, Drive Module consists of the motor controller and motor that used to drive the robot.

AVG AGV is the abbreviation of Automated Guided Vehicle or Automatic Guided Vehicle, which refer to a mobile robot that follows markers or wires in the floor, or uses vision, magnets, or lasers for Version 2.0 10 Zalpha navigation. They are most often used in industrial applications to move materials around a manufacturing facility or warehouse.

Payload Handling Module It refers to anything that attached to the robot to handle your material. It can be a rack, a cabinet or even an articulated robot. For DF Zalpha AGV, there are several payload handling modules such as Hooking and Towing module available as an optional purchase.

1.5 More Information

Visit (http://www.dfautomation.com/) to know more about DF AGV

CHAPTER

TWO

SAFETY

2.1 Introduction

This chapter contains important safety information, which must be read and understood by the integrator of AGV. It is essential that all instructions and guidance provided in other chapters and parts of this manual are observed and followed.

2.2 Validity and Responsibility

The information does not cover how to design, install and operate a complete AGV application, nor does it cover all peripheral equipment that can influence the safety of the complete system. The complete system must be designed and installed in accordance with the safety requirements set forth in the standards and regulations of the country where the AGV is installed.

The integrators of AGV are responsible for ensuring that the applicable safety laws and regulations in the country concerned are observed and that any significant hazards in the complete AGV application are eliminated.

- Making a risk assessment for the complete system;
- Interfacing with other machines and additional safety devices if defined by the risk assessment;
- Ensuring that the user will not modify any safety measures;
- Validating that the total system is designed and installed correctly;
- Specify instructions for use;
- Marking the AGV installation with relevant signs and contact information of integrator;
- Collecting all documentation in a technical file: including the risk assessment and this manual;

2.3 Intended Use

AGVs are industrial robot which intended for transporting materials such as pallets, rolls, racks, carts, trolleys and containers in a workspace. Industries currently utilizing AGVs including (but are not limited to): Manufacturing, Pharmaceutical, Chemical, Automotive, Warehousing, Food & Beverage and Hospital.

Any use of application deviating from the intended use is deemed to be impermissible misuse. This includes, but is not limited to:

- Use where the rated performance levels are insufficient;
- Use where the performance of the safety functions are insufficient;
- Use in potentially explosive environments;
- Use in medical and life critical applications;
- Use before performing a risk assessment;
- Use as a climbing aid;
- Operation outside the permissible operating parameters.

2.4 Risk Assessment

One of the most important things that an integrator needs to do is to make a risk assessment. This is required by law in many countries. The AGV itself is a completed mobile robot, hence the safety of the AGV installation depends on how the AGV is integrated.

The risk assessment that the integrator conducts shall consider all work procedures throughout the lifetime of the AGV application, including but not limited to:

- Program the AGV during setup and development of the AGV installation;
- Troubleshooting and maintenance;
- Normal operation of the robot installation.

A risk assessment must be conducted before the AGV is powered on for the first time. A part of the risk assessment conducted by the integrator is to identify the proper safety configuration settings, as well as the need for additional emergency stop buttons and / or other protective measures required for the specific AGV application.

CHAPTER

THREE

ZALPHA AGV

3.1 Introduction

This chapter briefly describes the basics of the mechanical implemented on Zalpha. The panel info, safety features, recommended magnetic track setup, charging station, optionals and peripherals.

3.2 Packaging Details

Basic Components:

- One fully-assembled Zalpha with NavWiz system installed

The AGV includes the Sensor Modules (front and rear bumper and a laser scanning obstacle sensor), Panel Module, left and right Drive Modules, a manual charging port, a charger contact and a battery.

- Automatic Charging Station

Every Zalpha come with its own Automatic Charging Station, together with a power cord with BS 1363 (Type G) Plug and C13/C14 Coupler and a manual charging cable. The power rating of the charger is 220V~240V AC by default (110V AC upon request)

DANGER:
Powering up the charging station with incorrect power rating will damage the charger and has the chance of causing fire

- Printed Documentation file

With every purchase of Zalpha, a series of printed documents including the User Manual, Warranty Certificates, QC Report of the particular AGV will be provided

Optional Components:

- Extension Module

With purchase of Zalpha Extension Module, the module will be assembled to Zalpha, unless otherwise stated.

- Hooking Module

With purchase of Zalpha Hooking Module, the module will be assembled to Zalpha, unless otherwise stated.

> **Note** Hooking Module will be bundled together with Extension Module.

- Towing Module

With purchase of Zalpha Towing Module, the module will be assembled to Zalpha, unless otherwise stated.

- LCD Touchscreen Protective Cover
- NavWiz FMS

With purchase of NavWiz FMS, a Fleet Management System server will be bundled together and Zalpha will be enabled into fleet mode, unless otherwise stated.

> **Note** NavWiz FMS server is not intended to provide desktop computer operating function. It is a FMS controller only. A separate computer terminal required to perform operation or changes.

- Additional laser scanning obstacle sensor

The basic components of Zalpha come with a laser scanning obstacle sensor which will be mounted on either front or rear Sensor Module. Additional laser scanning obstacle sensor is available as an optional purchase.

User-Supplied Components:

- WiFi enabled PC with browser installed Google Chrome Version 54.0 and above or Mozilla Firefox 49.0 and above is recommended

3.3 Modules of Zalpha

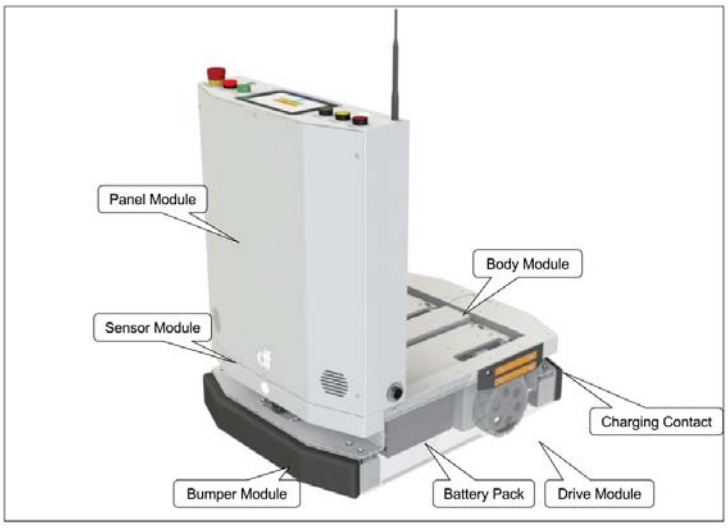

Fig. 3.1: Basic Module Of Zalpha.

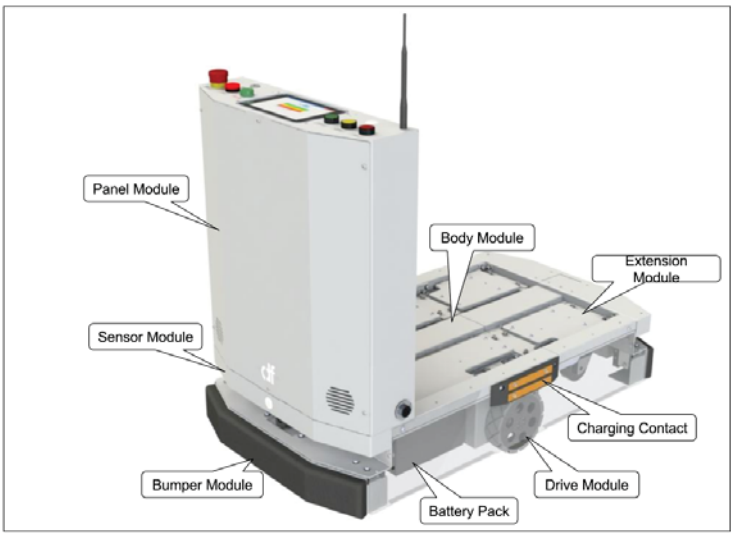

Fig. 3.2: Zalpha With Extension Module

3.4 Panel of Zalpha

Panel consists of Reset Key, Emergency Stop, Low Battery Indicator, ON/OFF Button, LCD Touchscreen, Start Button, Brake Release Button, Stop Button and Antenna. The function of each component is as below:

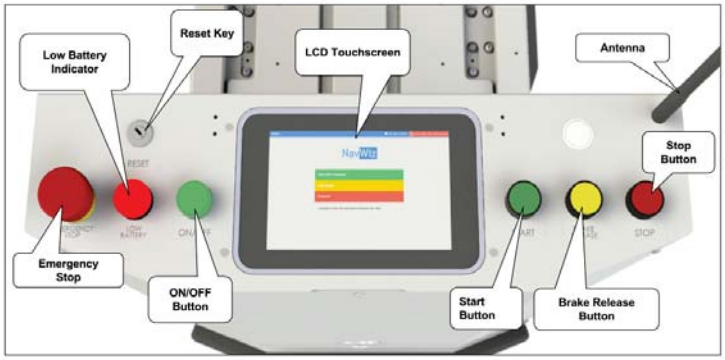

Fig. 3.3: Panel Zalpha

- **Emergency Stop:**

  Emergency Stop button let user to trigger an immediate stop on the AGV Movement. Button is needed to be manually released before resuming AGV Operation.

- **Low Battery Indicator:**

  Low Battery Indicator will light up when the battery level is lower than 20%. Operations are not recommended if the **Low Battery Indicator** lit up.

CAUTION:
Operating the AGV under low battery level may cause the AGV sudden power down or unstable operation.

- **ON/OFF Button:**

  To power on Zalpha AGV, press and hold the **ON/OFF Button** for 1s. The bootup time of Zalpha AGV will take approximately 30 seconds. Zalpha AGV is ready to operate when **NavWiz Boot Screen** (see *NavWiz Boot Screen* in *NavWiz documentation*) is shown.

  Note Zalpha will not be able to power on if the Reset Key switch is in OFF position.

- **LCD Touchscreen:**

Display status of Zalpha AGV. It also serves as a HMI panel that allow user to interact with the AGV

CAUTION:
Impact on the LCD Touchscreen with sharp edges or external force will cause the screen to break.

- **Start Button:**

Start Button served as an alternative for the "OK" option in Wait Acknowledge and "Yes" option in Confirm Action's popup.

- **Brake Release Button:**

To release the braking mechanism of the AGV to manually move AGV with external force. For detailed brake release operation please see *Brake Release*.

- **Stop Button:**

Stop Button served as an alternative for the "No" option in Confirm Action's popup.

- **Antenna:**

Zalpha AGV's WiFi transmitter and receiver.

CAUTION:
Overbend the antenna will break the antenna.

- **Reset Key:**

The function of **Reset Key** switch is to perform a hard reset for AGV System under special condition, e.g. Zalpha AGV was not able to perform a reboot under normal standard operation procedure. The key of the **Reset Key** switch should be keep by authorised personnel. Turning the **Reset Key** switch will cut off the main power supply of Zalpha AGV controller

WARNING:
Under normal operation, turning the Reset Key is **NOT** recommended.

WARNING:
This indicates an imminently hazardous situation which, if not avoided, could result in death or serious injury.

Note Zalpha will not be able to power on if the Reset Key switch is in OFF position.

3.5 Charging Contact and Charging Station

Fig. 3.4 shows the Charging Contact of Zalpha.

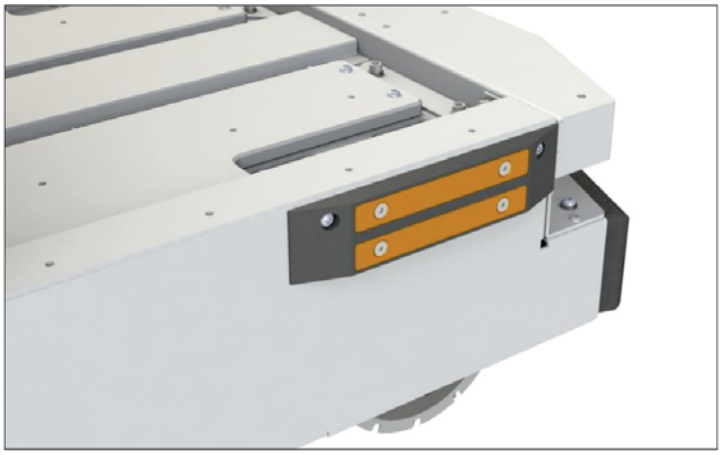

Fig. 3.4: Zalpha Charging Contact

The Charging Contact of Zalpha is located at the side of the AGV. The Charging Contact is configurable to either left or right side of the AGV. Changing side for the Charging Contact will involve some rewiring work. Please contact authorised personnel to perform the changes.

WARNING:
Improper installation of the Charging Contact can cause damage to the AGV.

Fig. 3.5 shows the Charging Station of Zalpha. The Charging Station consists of two guide wheels at the side, and a spring loaded Charging Contact at the middle. The rated charging voltage and current of the charger are 28.8V and 12.5A. At the side of the Charging Station, there are Manual Charging Port and the power inlet. Every Charging Station unit is provided with one Power Cable as shown in Fig. 3.7 and a Manual Charging Cable as shown in Fig. 3.8.

The charging station is recommended to be secured on the floor with provided wall plug before operation.. For more information about setting up the Charging Station, please see *Charging Station*.

Warning:
Be extra careful when handling heavy equipments to avoid injury.

Fig. 3.5: Charging Station Of Zalpha

Fig. 3.6: Power Inlet and Manual Charging Port

Fig. 3.7: Power Cord of Charging Station

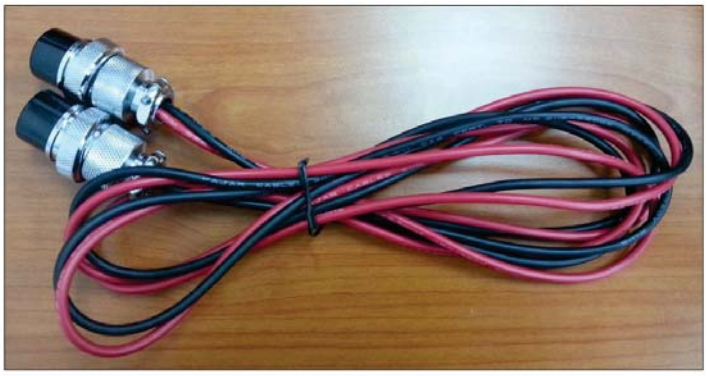

Fig. 3.8: Manual Charging Cable

Fig. 3.9: Zalpha is docked to the Charging Station.

3.6 Getting Started

Step 1

After unpacking Zalpha, check for any damage on the AGV. If damage on the AGV is found, please contact the authorised personnel immediately. The examples of damage are cracked LCD Touchscreen, dented AGV body, broken bumper cushion etc. If everything is fine, press the ON/OFF button on the Panel for 2s to power on the AGV. If the AGV is unable to power on, turn the Reset Key switch and try again. After the green light of the ON/OFF button lit, Zalpha will take approximately 20s to power up. When the LCD Touchscreen shows NavWiz Boot Screen, Zalpha is ready for action.

Note Zalpha will not be able to power on if the Reset Key switch is in OFF position.

Step 2

Setting up the Automatic Charging Station. You can skip this step if you are using the manual charging port to charge Zalpha. After the location of the Automatic Charging Station is confirmed, drill the floor according to the recommended specification and insert wall plug into the hole. Mount the Charging Station and secure the nuts. For the drilling template of the Charging Station, please refer to Appendix. For more information of the dimension of Charging Station, please see *Charging Station*.

Step 3

Set up the AGV track according to the recommended specification. For more information, please see *Track*.

Step 4

Draw the Map of the layout and set the Task Template in ConfigPanel. After that, Zalpha is ready to be deployed on the field. For more information about the Map and Task Template, please see *NavWiz System* in *NavWiz User Manual*.

3.7 Safety Features

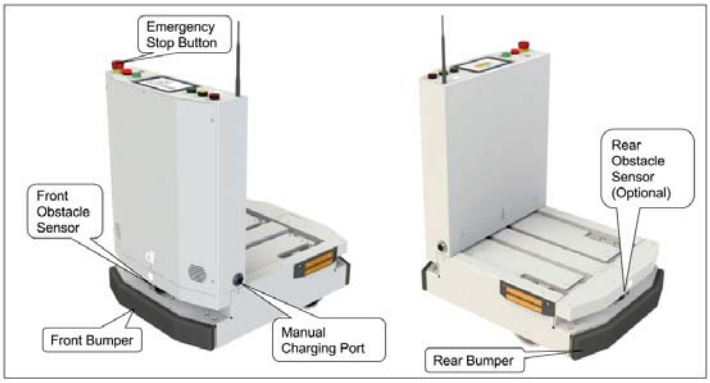

Fig. 3.10: Safety Feature

3.7.1 Front and Rear Laser Obstacle Sensor

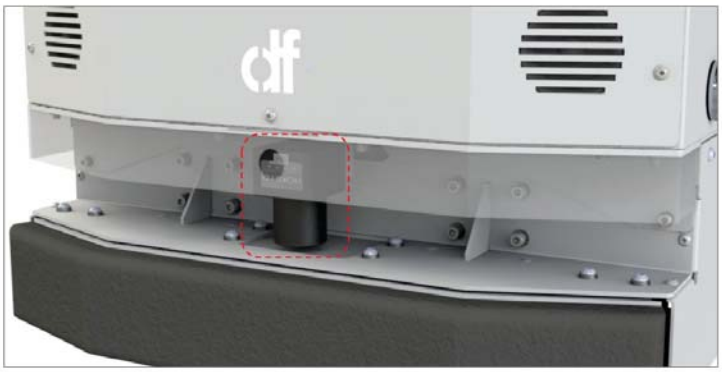

Fig. 3.11: Front Laser Scanning Obstacle Sensor

Zalpha front laser scanning Obstacle Sensor is located underneath the Panel Module as shown in Fig. 3.11. While Zalpha AGV is moving, the laser scanning Obstacle Sensor will scan and locate obstacle in front of Zalpha. When obstacle presence, the Obstacle Sensor will alert Zalpha to slow down when getting closer to the obstacle and stop when Zalpha is got too close to the obstacle to avoid physical impact between Zalpha and the obstacle. After the obstacle is removed, Zalpha AGV will continue its operation automatically.

Note Rear Obstacle Sensor is not included in standard package of Zalpha. It is available as an optional purchase.

3.7.2 Laser Scanning Area

There are three layers in the Laser Scanning Area - Far, Middle and Near.

Fig. 3.12: Laser Scanning Area

- **Laser scanning profile for Forward Movement:**

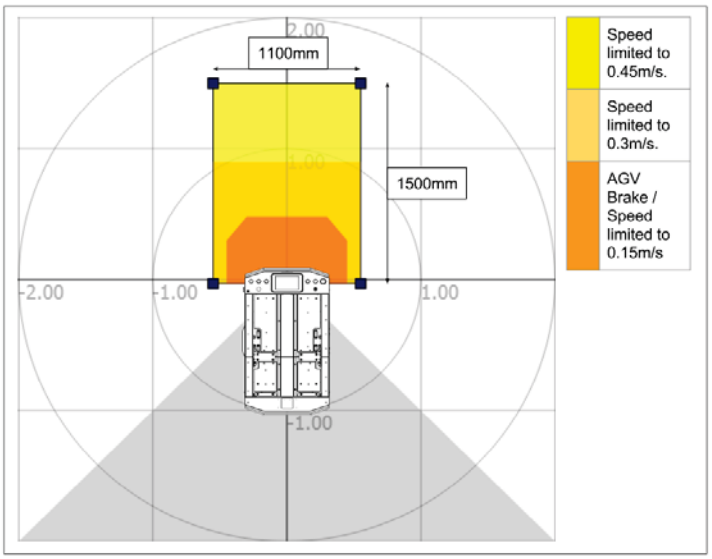

Fig. 3.13: Front Movement Laser Scanning Profile

- **Laser scanning profile for Reverse Movement:**

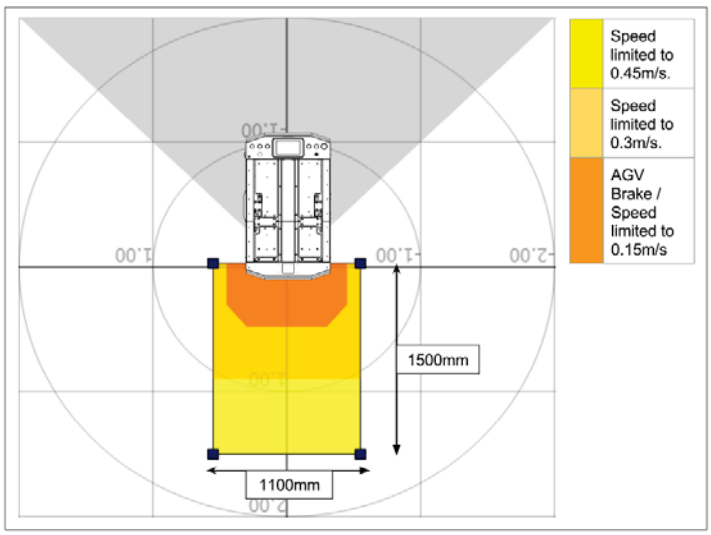

Fig. 3.14: Reverse Movement Laser Scanning Profile

Note Rear Obstacle Sensor is not included in standard package of Zalpha AGV. It is available as an optional purchase.

- **Laser scanning profile for Rotate Left Movement:**

Fig. 3.15: Rotate Left Movement Laser Scanning Profile

Note Rear Obstacle Sensor is not included in standard package of Zalpha AGV. It is available as an optional purchase.

- **Laser scanning profile for Rotate Right Movement:**

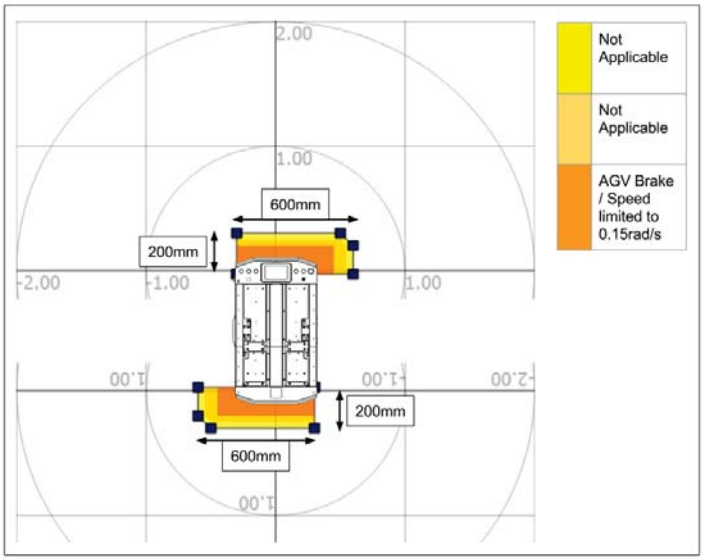

Fig. 3.16: Rotate Right Movement Laser Scanning Profile

Note Rear Obstacle Sensor is not included in standard package of Zalpha AGV. It is available as an optional purchase.

3.7.3 Laser Scanning Obstacle Sensor Limitation

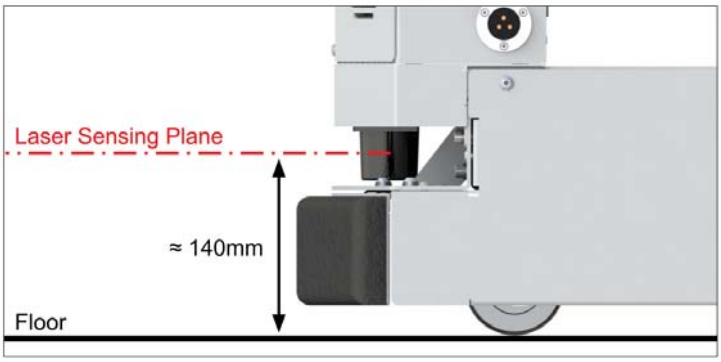

Fig. 3.17: Laser Scanning Obstacle Sensor Limitation

The sensing plane of the laser scanning **Obstacle Sensor** of Zalpha AGV is approximately 140mm above ground level. Therefore, Zalpha AGV is unable to detect obstacle that lower than this height

using the laser scanning **Obstacle Sensor**. To counter this limitation, Zalpha AGV is equipped with another important safety component Bumper . For more information about **Bumper** , see *Front and Rear Bumper*.

3.7.4 Front and Rear Bumper

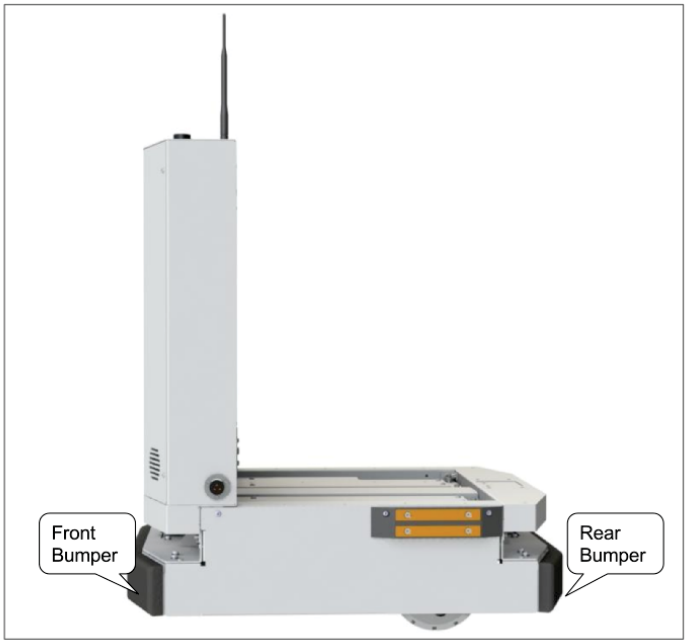

Fig. 3.18: Front and Rear Bumper

When the **Bumper** of Zalpha contacted with obstacle, Zalpha will stop its movement and the braking mechanism will be engaged immediately. The **Bumper** of Zalpha AGV is made of foam-filled cushion which designed to reduce the impact when contact with obstacle. To resume Zalpha AGV operation after **Bumper Safety Trigger** , please see *Safety Trigger Resume Sequences*.

3.7.5 Emergency Stop Button

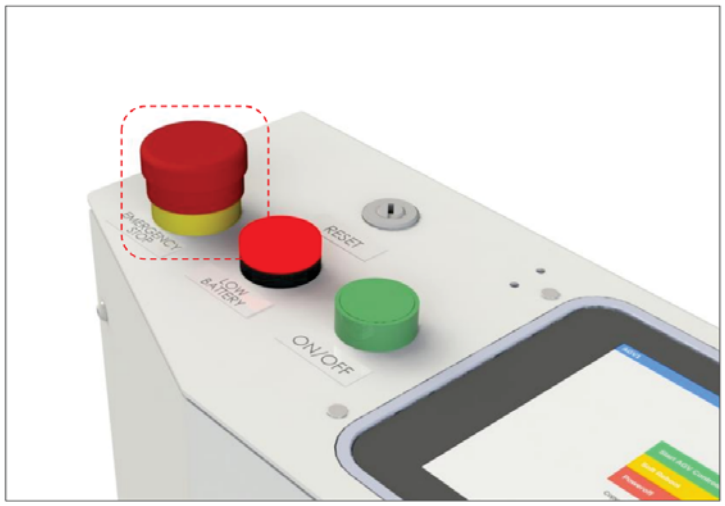

Fig. 3.19: Emergency Stop Button

Emergency Stop button is a manual control device. It is a method of initiating the emergency stop function for Zalpha movement. Upon the activation of this button, the movement of Zalpha will stop immediately. User confirmation are required to resume the operation after the **Emergency Stop** button is released. To release **Emergency Stop** button, hold and turn the **Emergency Stop** button to the indicated direction on the Emergency Stop button. For more information about how to recover Zalpha AGV operation after Emergency Stop Safety Trigger , please see *Safety Trigger Resume Sequences*.

3.7.6 External Safety Input

External Safety Input allows user to add additional safety trigger device. This Safety Input port can be access through Expansion IO Panel. Please check Chapter *ExpansionIO* for detail information about External Safety Input.

3.7.7 Brake

Fig. 3.20: Brake Release Button

The brake of Zalpha will always be engaged even after power off. **Brake Release** button is a function to allow user to push/move Zalpha freely. In order to release the brake, it require user to press and hold on the button. The functionality of this button is only available under following condition:

- Upon any **Safety Trigger**
- Upon activation of **Free Motor** function under **Manual Line Follow** app

Brake Release Using Manual Line Follow App

Steps

1. Select **Apps** tab on **UserPanel**.
2. Select **Manual Line Follow** app from the **Apps** list.

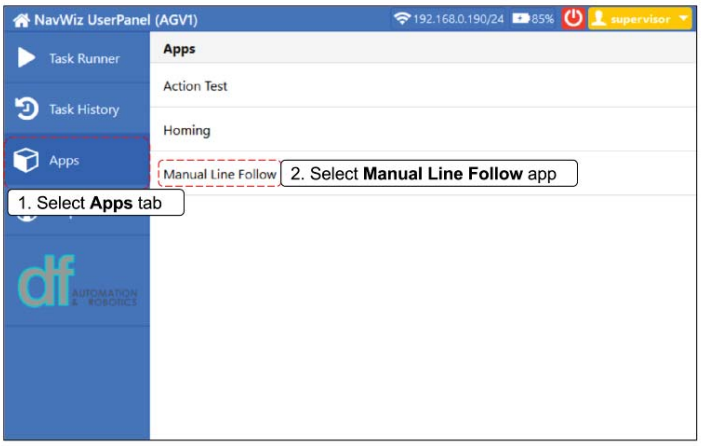

Fig. 3.21: Steps To Select Manual Line Follow App

3. In **Manual Line Follow** app window, toggle the **Free Motor** option. Push the **Brake Release** button to push Zalpha AGV freely

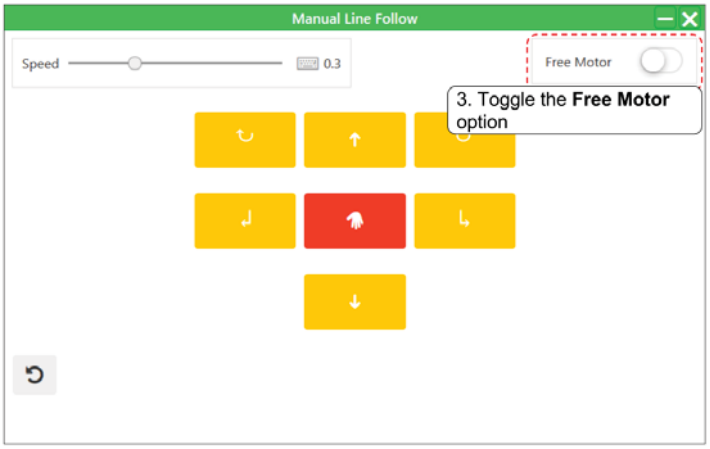

Fig. 3.22: Free Motor Option In Manual Line Follow App

3.7.8 Safety Measure of Manual Charging

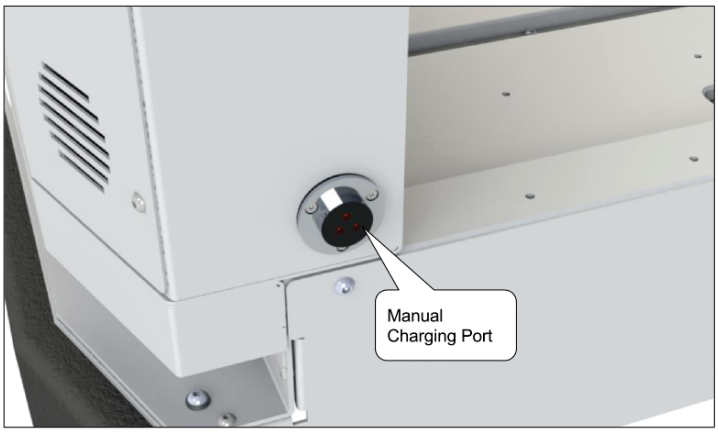

Fig. 3.23: Manual Charging Port

Charger Connected Safety Trigger is a safety feature that prevent Zalpha AGV from moving if the **Manual Charging Port** is connected with Charger. On the event that Zalpha AGV is being instructed to operate and the **Manual Charging Port** is connected, a Safety Trigger will be activated and a Safety Triggered message will be shown on the LCD Touchscreen. To recover Zalpha operation, please see *Safety Trigger Resume Sequences*.

3.7.9 Safety Trigger Resume Sequences

In case of **Safety Trigger** , please follow the safety resume sequence to resume normal operation:

Front and Rear Obstacle Sensor Safety Trigger

i. Upon sensing of obstacle inside the laser scanning profile, Zalpha AGV will stop its current operation immediately and a **Safety Triggered** with **Obstacle blocked** message as shown in Fig. 3.24 will be shown on the **LCD Touchscreen**

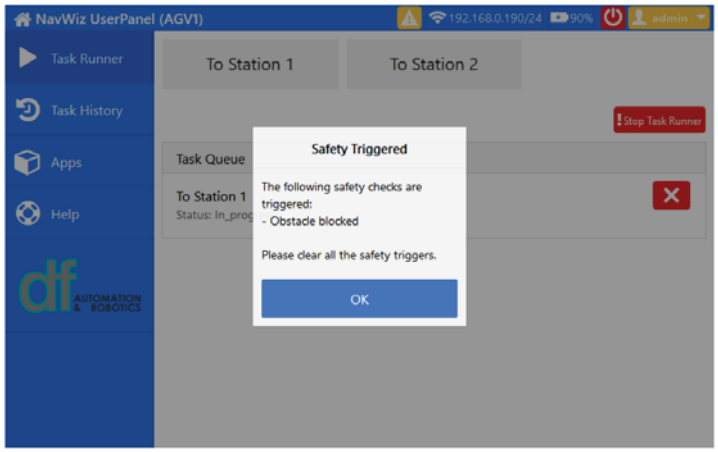

Fig. 3.24: Obstacle Blocked Safety Triggered Message

ii. Clear any obstacle that blocked the movement of the AGV (see *Laser Scanning Area*)

iii. A **Resuming** a message as shown in Fig. 3.25 will be shown on the **LCD Touchscreen**.

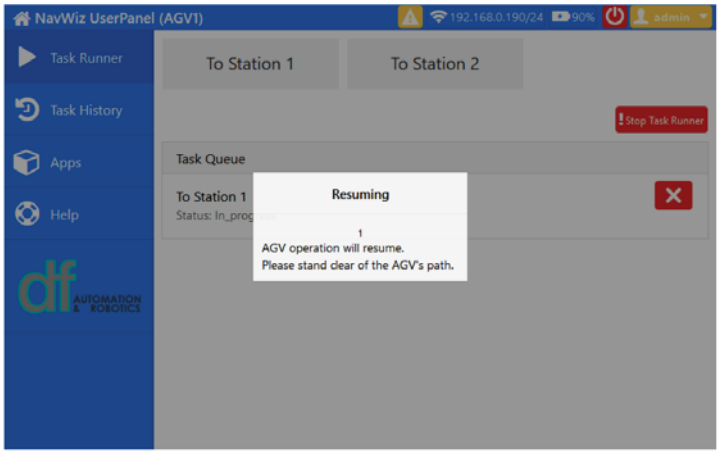

Fig. 3.25: Resuming Message

4. AGV will automatically resume its operation after 2 seconds

Front and Rear Bumper Safety Trigger

i. Upon the activation of either Front or Rear **Bumper** , AGV will stop its current operation immediately and a **Safety Triggered** with **Bumper blocked** message will be shown on the **LCD Touchscreen** as shown in Fig. 3.26.

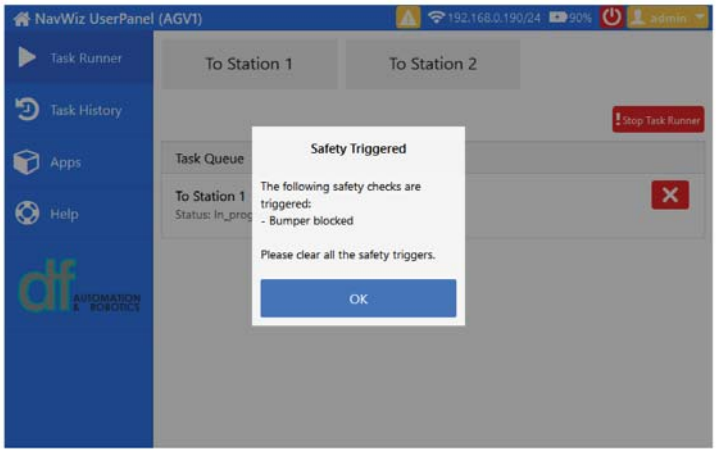

Fig. 3.26: Bumper Blocked Safety Triggerd Message

ii. Clear the obstacle at the Bumper sensor. A **Safety Resume** message as in Fig. 3.27 will be shown

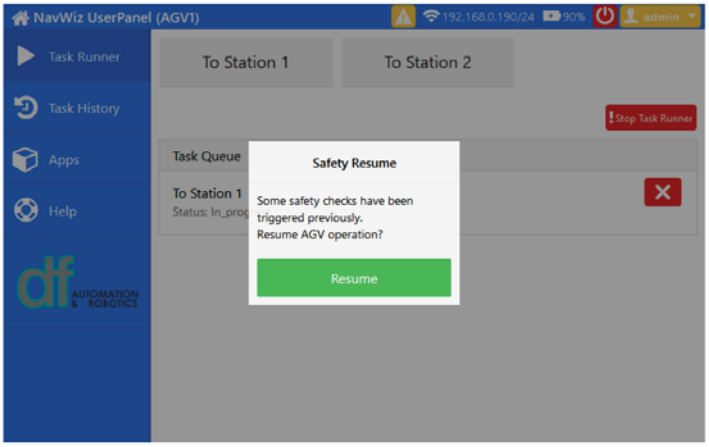

Fig. 3.27: Safety Resume Message

iii. Press the **Resume** button on display panel or **Start Button** to resume the operation

iv. A **Resuming** a message as shown below will be shown on the **LCD Touchscreen**

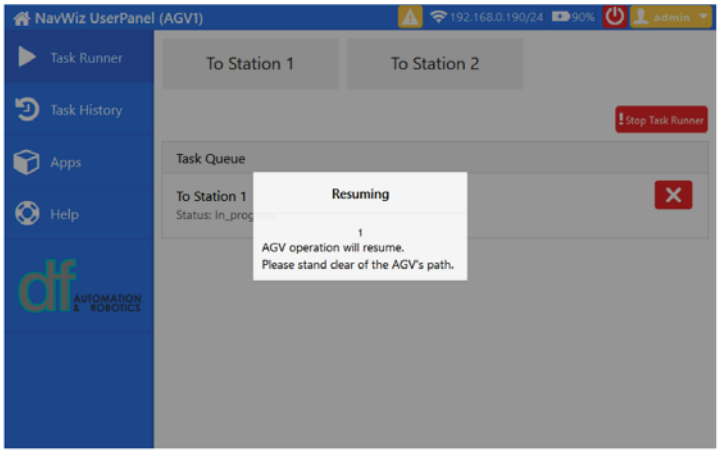

Fig. 3.28: Resuming Message

v. AGV will automatically resume its operation after 2 seconds

Emergency Stop Safety Trigger

i. Upon manual activation of the **Emergency Stop button** , Zalpha AGV will stop its current operation immediately and a **Safety Trigger** message with **Emergency button pressed** will be shown on the **LCD Touchscreen** . See Fig. 3.29.

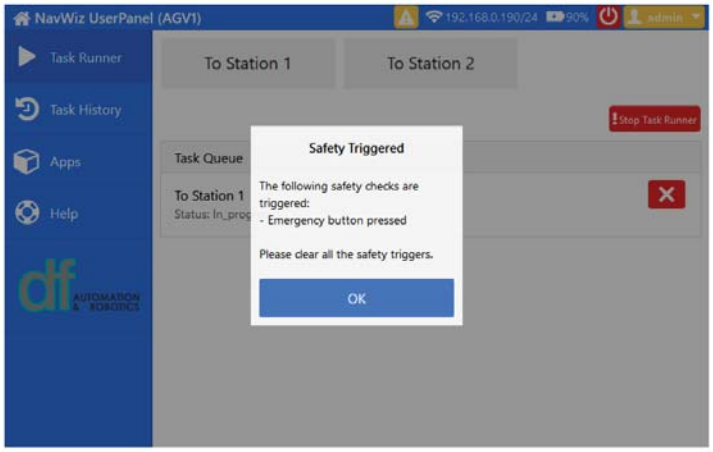

Fig. 3.29: Emergency Button Pressed Safety Triggered Message.

ii. After making sure that Zalpha AGV is safe to continue its operation, release the **Emergency Stop** button by turning to the indicated direction until a "clicking" sound is heard.

iii. After releasing the Emergency Stop button, a **Safety Resume** message as below will be shown

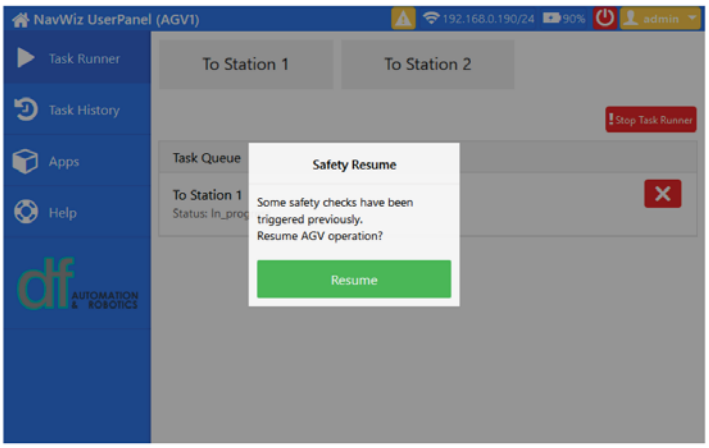

Fig. 3.30: Safety Resume Message

iv. Press the **Resume** button on the **LCD Touchscreen** or **Start Button** to resume the operation.

v. A Resuming a message as shown below will be shown on the **LCD Touchscreen**

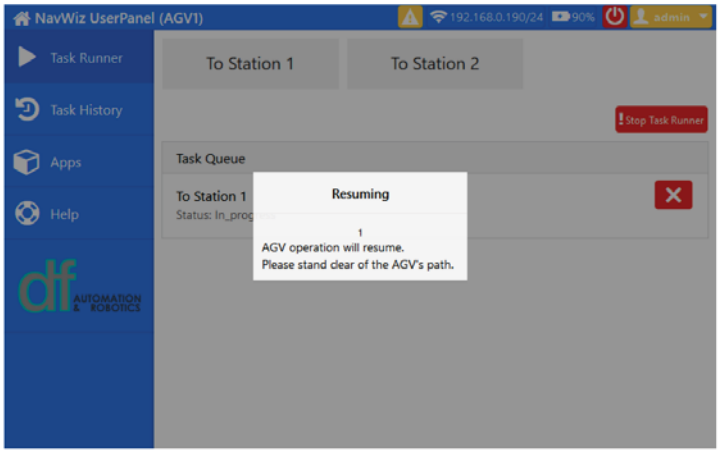

Fig. 3.31: Resuming Message

vi. AGV will automatically resume its operation after 2 seconds

Manual Charging Safety Trigger

i. Upon the start of AGV operation with the manual charging cable connected, the operation will be stop immediately and a **Safety Triggered** popup with **Charger connected** message will be shown on the LCD Touchscreen. See Fig. 3.32.

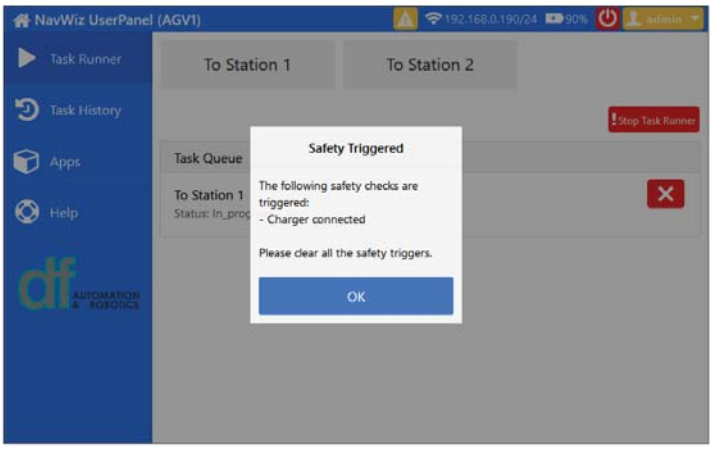

Fig. 3.32: Charger Connected Safety Triggeres Message

ii. Remove the manual charging cable that is connected to the **Manual Charging Port**

iii. After disconnecting the manual charging cable, a **Safety Resume** message as below will be shown

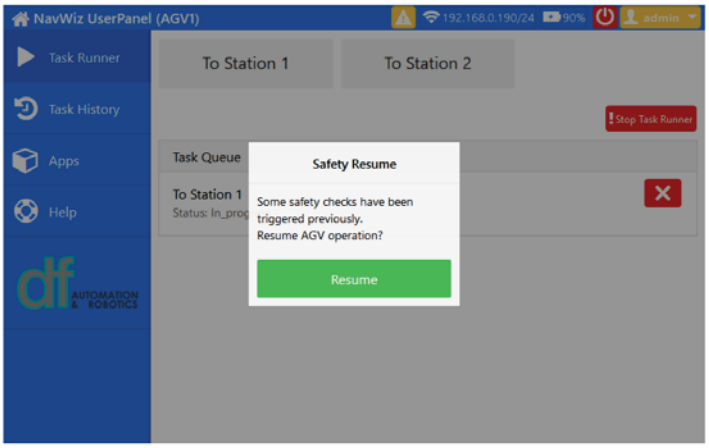

Fig. 3.33: Safety Resume Message

iv. Press the resume button on the display panel or **Start Button** to resume the operation.

v. A **Resuming** a message as shown below will be shown on the **LCD Touchscreen**

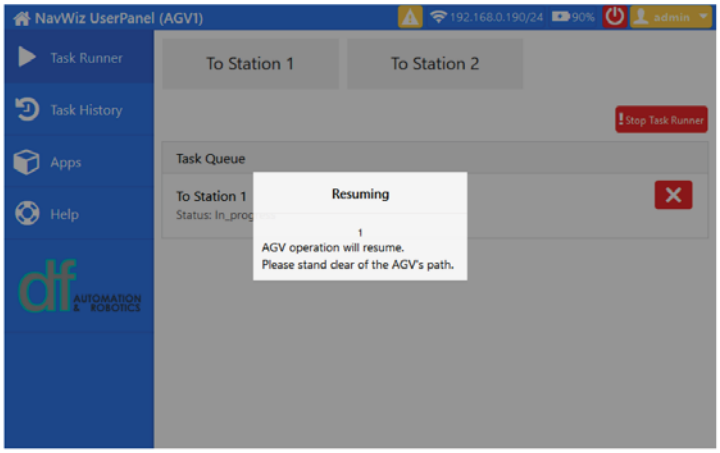

Fig. 3.34: Resuming Message

6. AGV will automatically resume its operation after 2 seconds

3.8 Track

The basic navigation method of Zalpha is by tracing the magnetic field of the Track that lie on the floor. The Track of Zalpha is constructed using 50mm width magnetic adhesive tape. The magnetic field of the Track is in north pole face up order. The thickness of the magnetic tape is 2mm.

Fig. 3.35: Magnetic Tape With Adhesive

3.8.1 Specification of the Track

- **Junction**

Junction is defined as the whisker in between a straight path. Junction is functioned as a checkpoint for the actions of Zalpha. Zalpha locate itself by counting the amount of junctions it passed through along the Track. A junction can serve as a checkpoint for travel speed adjustment, changing navigation profile, stop station etc.

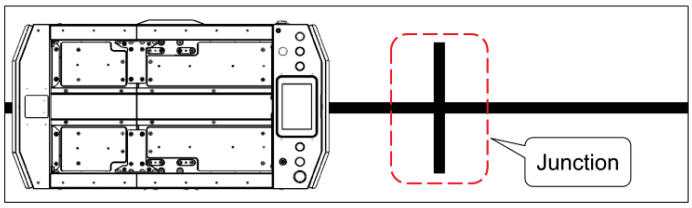

Fig. 3.36: Junction

Fig. 3.37 shows the recommended dimension of the Junction.

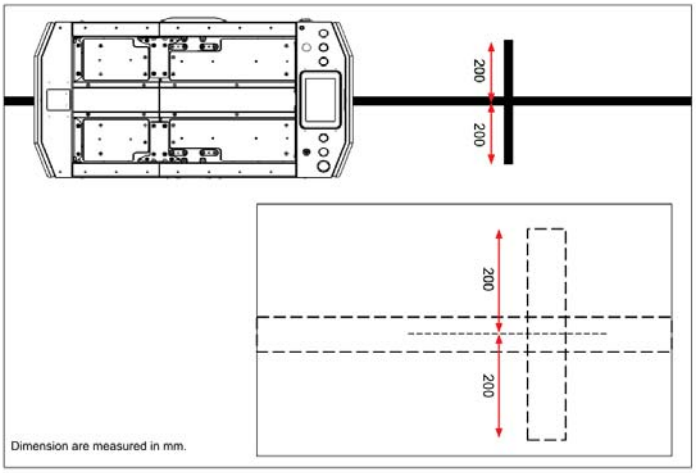

Fig. 3.37: Dimension Of Junction

- **Intersection**

Intersection is defined as the merging point of two paths that perpendicular to each other. Similar to Junction, Intersection also can serve as a checkpoint for the actions of Zalpha.

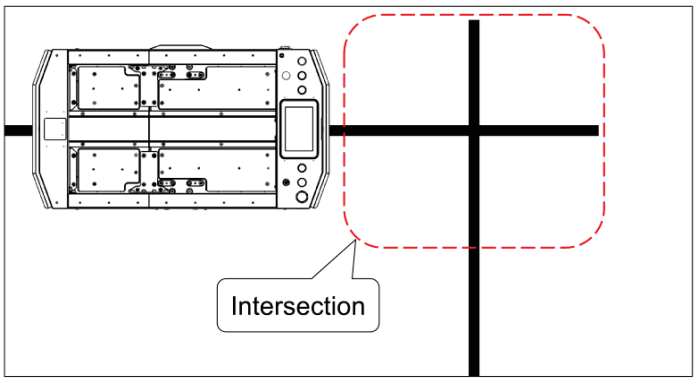

Fig. 3.38: Intersection Of Track

Fig. 3.39 shows the recommended dimension of Intersection.

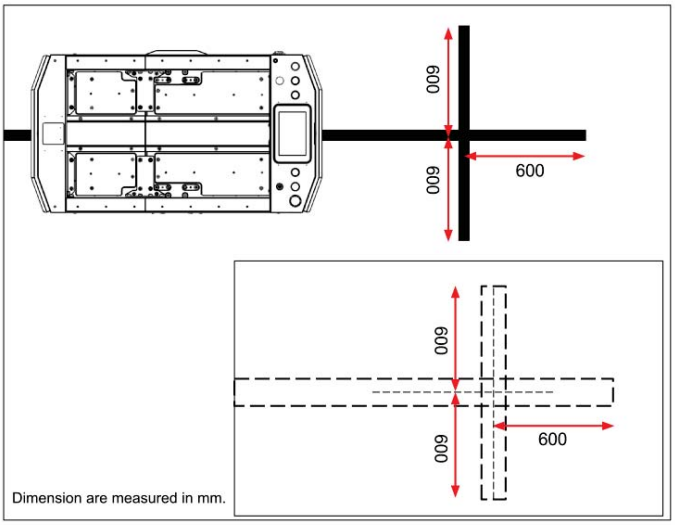

Fig. 3.39: Dimension Of Intersection

- **Comparison between Junction and Intersection**

Actions	Types of Track: Junction	Types of Track: Intersection
Forward	✓	✓
Reverse	✓	✓
Rotate Left / Right	X	✓
U-turn Left / Right	✓	✓

Fig. 3.40: Comparison Between Junction And Intersection

- **Minimum Turning Radius**

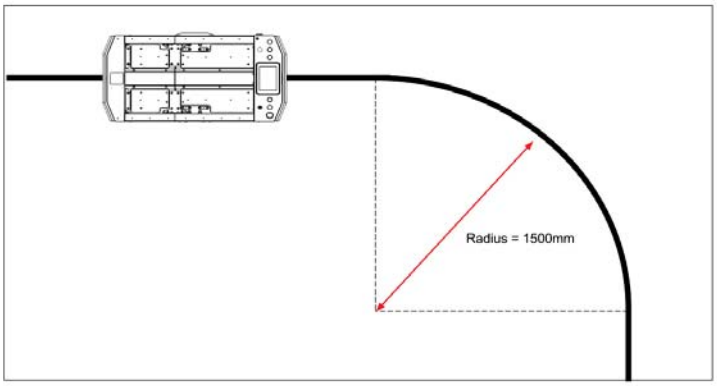

Fig. 3.41: Minimum Curning Radius Of Track

3.9 Charging Station

Each Zalpha AGV will have its dedicated charging station. In the ConfigPanel, the Station where the Charging Station is placed normally will be configured as the Home Station. Defining the Charging Station as the Home Station is to restrict all rotating actions of Zalpha at the Charging Station. By doing so, the AGV will approach the station in only one heading direction. If the travel direction of the AGV is opposed with the heading direction of the Charging Station, Zalpha will perform an U-turn at the junction before the Charging Station and reverse dock to the Charging Station.

Caution:
Not defining the Charging Station as the Home Station will cause Zalpha to rotate at the Charging Station. If that happen, Zalpha will collide with the charger and cause damage on the charger and AGV.

Note Charger of Zalpha must be mounted on the same side of the Charging Contact of the AGV.

3.9.1 Charging Station Setup of Zalpha

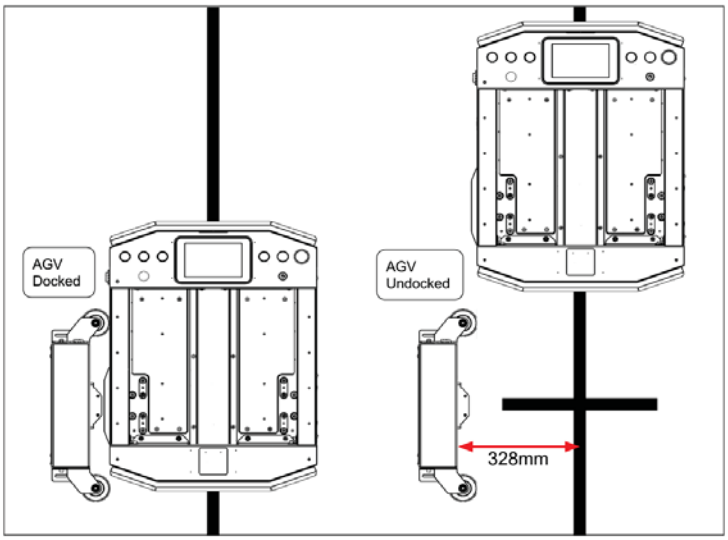

Fig. 3.42: Illustration Of Charging Station Setup Of Zalpha

3.9.2 Charging Station Setup of Zalpha with Extension Module

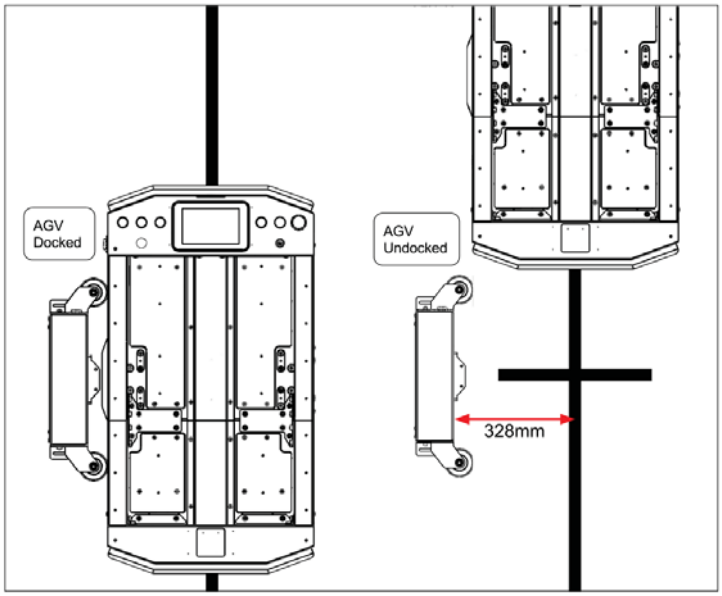

Fig. 3.43: Illustration Of Charging Station Setup Of Zalpha With Extension Module

3.9.3 Charging Station Mounting

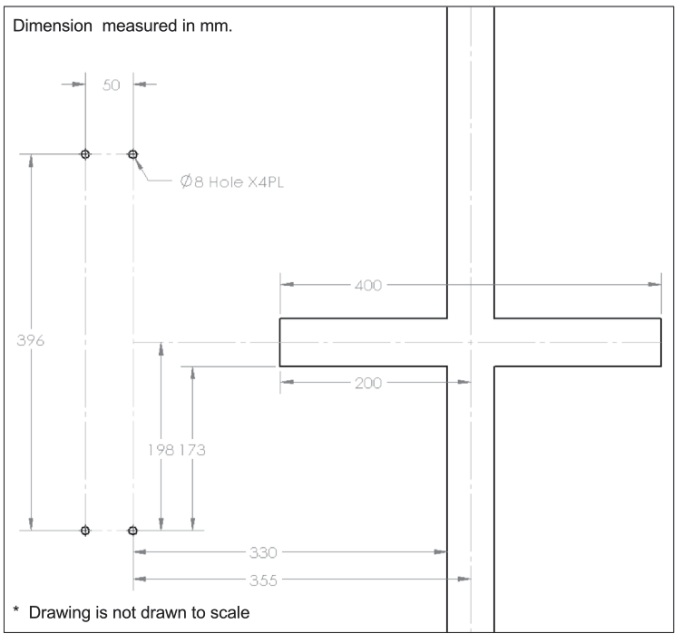

Fig. 3.44: Charging Station Mounting Drilling Dimension

After drilling the holes, install the M6 wall plug to each of the hole.

Fig. 3.45: M6 Wall Plug

3.10 ExpansionIO

Zalpha comes with expansion IO port for the expansion of feature on Zalpha (payload handle). Main feature under Expansion IO port.

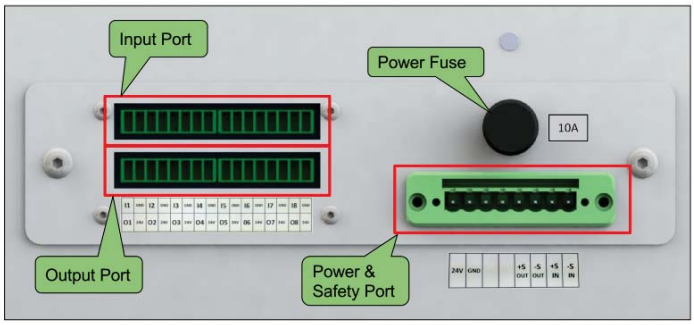

Fig. 3.46: Expansion IO

Recommended replacement connector type for these ports. By default, all the required connector will be provided on the Zalpha.

- Input port and Output Port Connector:
  - Model: Phoenix Contact BCP-350-8 GN.
  - Pitch: 3.5mm
  - Number of Contact: 8
  - Remark: 2x Connector for Input port and 2x Connector for Output port
- Power and Safety Port Connector:

- Model: Phoenix Contact BCP-508F-8 GN
- Pitch: 5mm
- Number of Contact: 8

3.10.1 24V Output

24V output for additional actuator on Zalpha. This 24V output is protected by 10A Power Fuse and this supply will be cut off during any safety trigger on Zalpha (Bumper, Emergency Button, Obstacle sensor or External Safety In). 10A protection fuse are accessible from the panel and the recommended replacement part are **0312010.MXP** from **Littelfuse**.

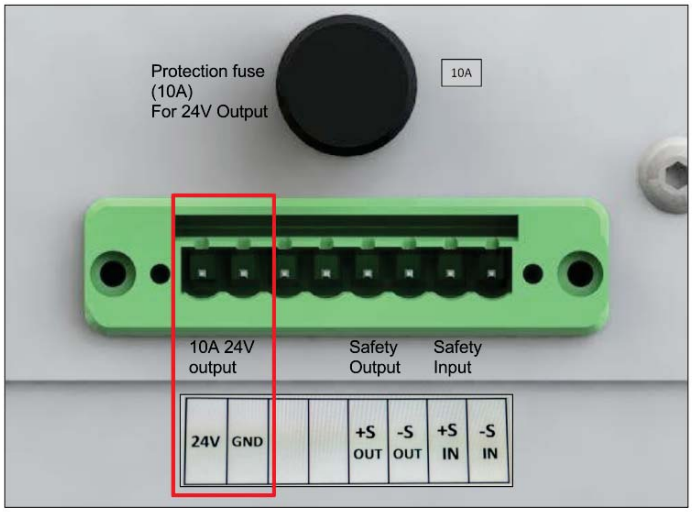

Fig. 3.47: Expansion IO 24V Power Port

3.10.2 Safety Input and Output Port

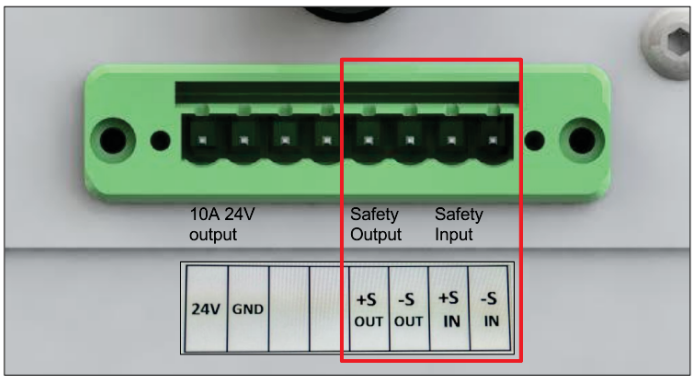

Fig. 3.48: Expansion IO Safety Input And Output Port

Safety Input port are additional safety input for the safety system of Zalpha. These +S IN and -S IN pin are NPN input type where they should shorted for normal condition and opened for safety trigger condition. They can be connected directly to additional Emergency Button. In the case to bypass the usage of Safety Input these Safety Input terminal should be shorted using a short conductor to avoid safety trigger.

Safety Output port are safety state output from Zalpha. During normal operation, these +S OUT and -S OUT pin will supply 24V where they can be connect to a relay to drive any safety signal condition. Do take note that user should keep the current consumption on these pin to be lower than 100mA to avoid overcurrent trigger of the Safety Output.

3.10.3 Input Port

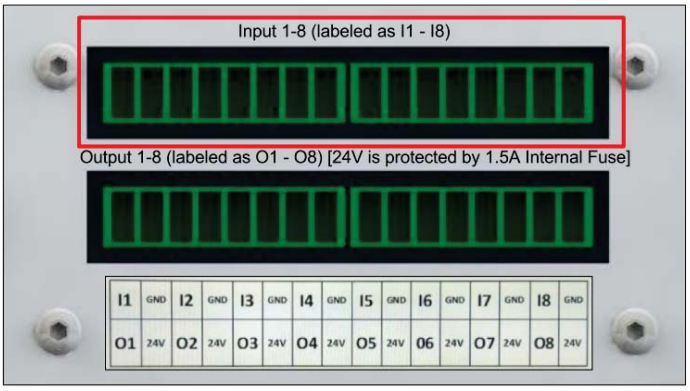

Fig. 3.49: Expansion IO Input Port

Input Port:

- Input type: NPN Input (Sinking)
- Short Input pin to GND to activate the input
- Open Input pin to deactivate the input
- Example1: Input pin can be activated using a push button or limit switch connected to the GND.

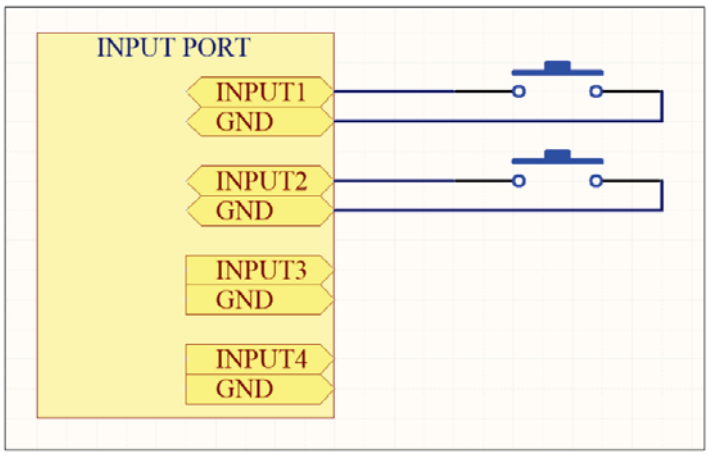

Fig. 3.50: Input Port Example 1

- Example2: Input pin can be activated using a sinking NPN transistor controlled by micro-controller.

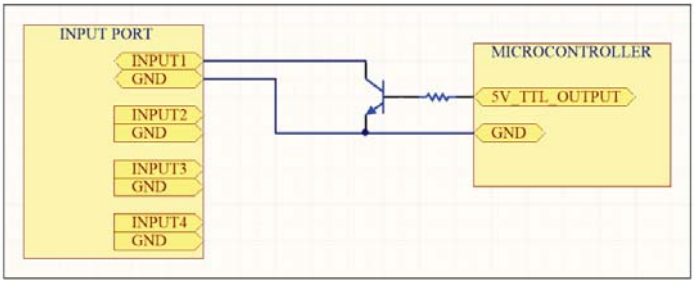

Fig. 3.51: Input Port Example 2

- Example3: Input pin can be activated by a relay controlled by PLC.

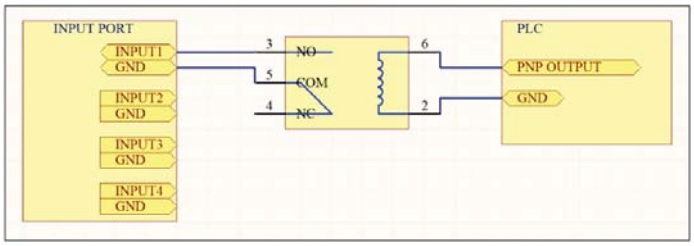

Fig. 3.52: Input Port Example 3

3.10.4 Output Port

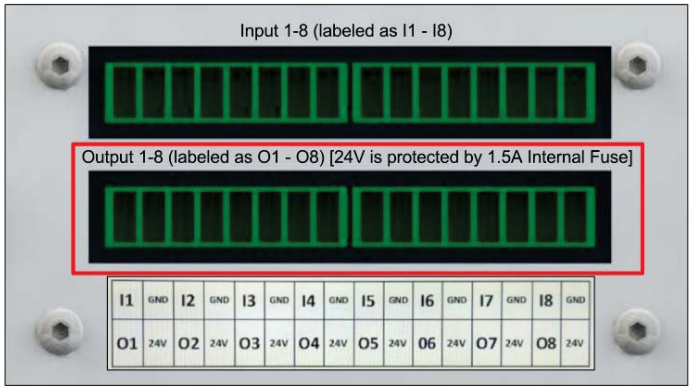

Fig. 3.53: Expansion IO Output Port

Output Port:

- Output Type: NPN Output (Sinking), Maximum current 250mA protected by PTC
- 24V Output: Protected by internal fuse (1.5A)
- Example1: Output pin can be use to control small load like 24V LED.

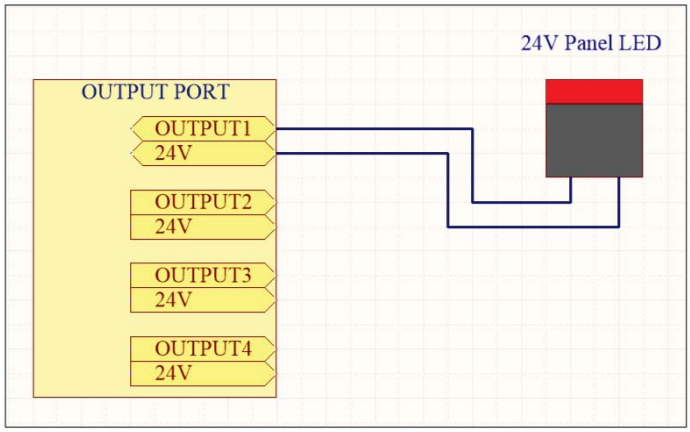

Fig. 3.54: Output Port Example 1

- Example2: Output pin can be use to activate relay for higher current application like Motor activation

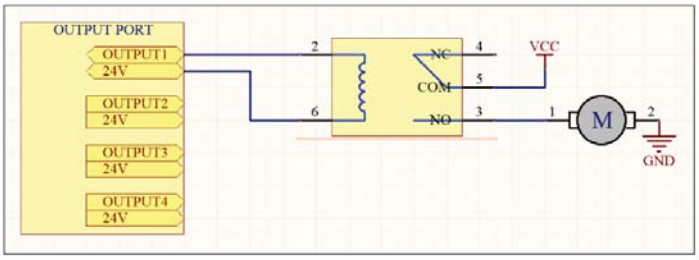

Fig. 3.55: Output Port Example 2

CHAPTER

FOUR

WARRANTIES AND DISCLAIMER

4.1 Warranties

Zalpha AGV come with warranty as below;

- Standard 1 Year Warranty except wear and tear parts
- 3 months limited warranty for parts as below;
  - Navigation Caster and Wheel
  - Buttons
  - Limit Switches
  - Battery
  - Charger
  - External Connectors
  - Interactive Display Panel
  - Bumper cushion
  - Laser sensor
  - Wireless Antenna
  - Mechanical Structure

Warranty applicable for manufacturing defect only

4.2 Disclaimer

DF Automation and Robotics Sdn. Bhd. is not liable for any accidents or mishaps due to misuse of DF Zalpha AGV product.

CAUTION:

Changes or Modifications not expressly approved by the party responsible could void the user's authority to operate this device.

NOTE:

This equipment has been tested and found to comply with the limits for a Class B digital device, pursuant to Part 15 of the FCC Rules. These limits are designed to provide reasonable protection against harmful interference in a residential installation. This equipment generates, uses and can radiate radio frequency energy and, if not installed and used in accordance with the instructions, may cause harmful interference to radio communications. However, there is no guarantee that interference will not occur in a particular installation. If this equipment does cause harmful interference to radio or television reception, which can be determined by turning the equipment off and on, the user is encouraged to try to correct the interference by one or more of the following measures:

- Reorient or relocate the receiving antenna.
- Increase the separation between the equipment and receiver.
- Connect the equipment into an outlet on a circuit different from that to which the receiver is connected.
- Consult the dealer or an experienced radio/TV technician for help.

This equipment complies with the FCC RF radiation exposure limits set forth for an uncontrolled environment. This equipment should be installed and operated with a minimum distance of 20 centimeters between the radiator and your body.

CHAPTER

FIVE

TROUBLESHOOTING & FAQ

Please visit (http://www.dfautomation.com/faqagv/) FAQ to know more

CHAPTER

SIX

SERVICES AND MAINTENANCES

Please refer to DF Zalpha Service Manual for more information about services and maintenances.

CHAPTER

SEVEN

TECHNICAL SPECIFICATIONS

7.1 Dimension of Zalpha

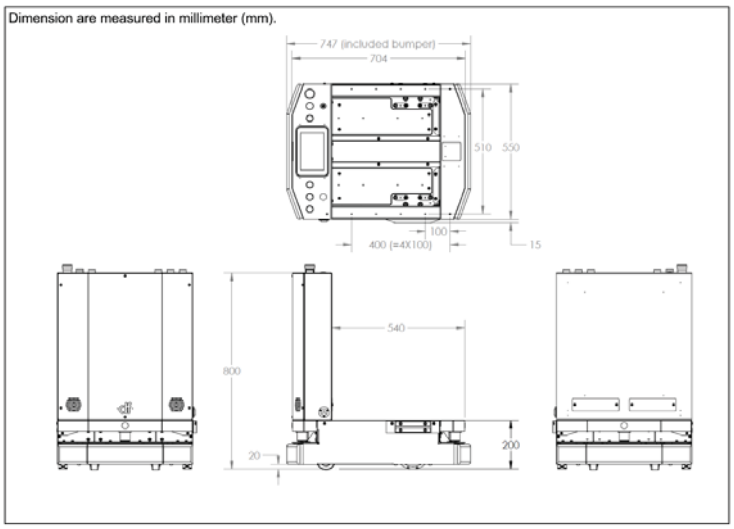

Fig. 7.1: Dimension Of Zalpha

7.2 Dimension of Zalpha with Extension Module

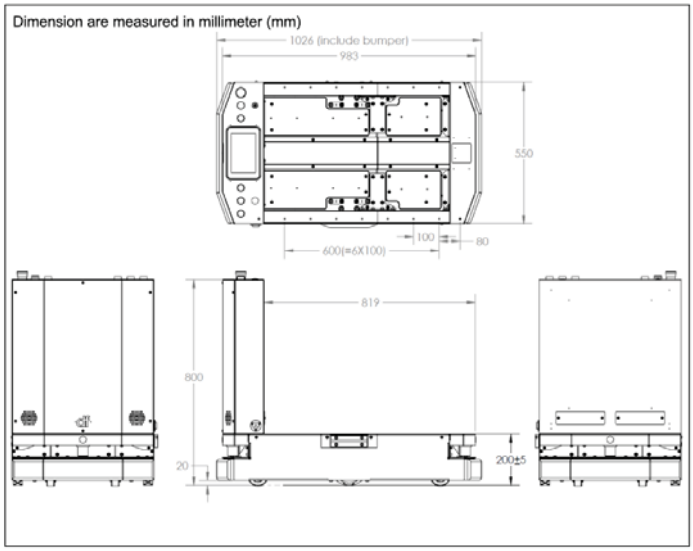

Fig. 7.2: Dimension Of Zalpha With Extension Module

7.3 Dimension of Charging Station

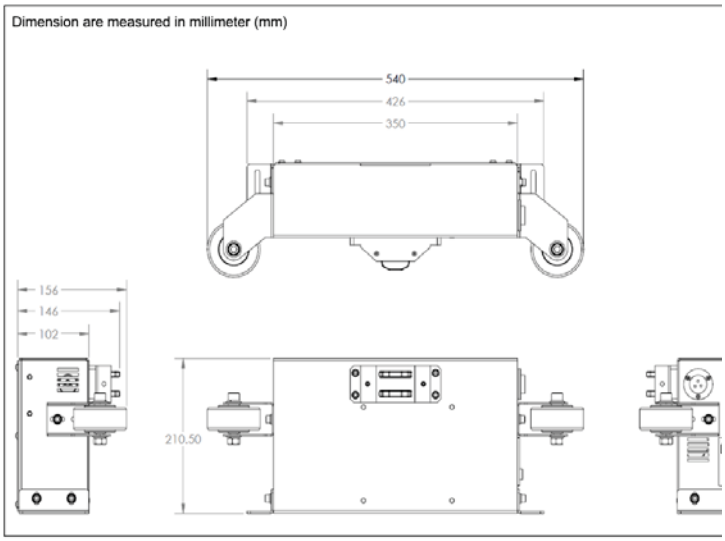

Fig. 7.3: Dimension Of Charging Station

7.4 Charging Station Mounting Drilling Dimension

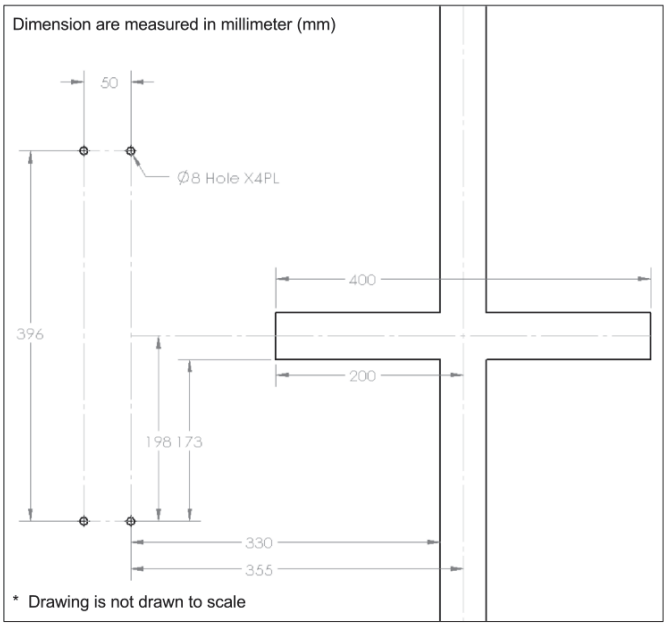

Fig. 7.4: Charging Station Mounting Drilling Dimension

7.5 Payload Handling Module Mounting Holes for Zalpha

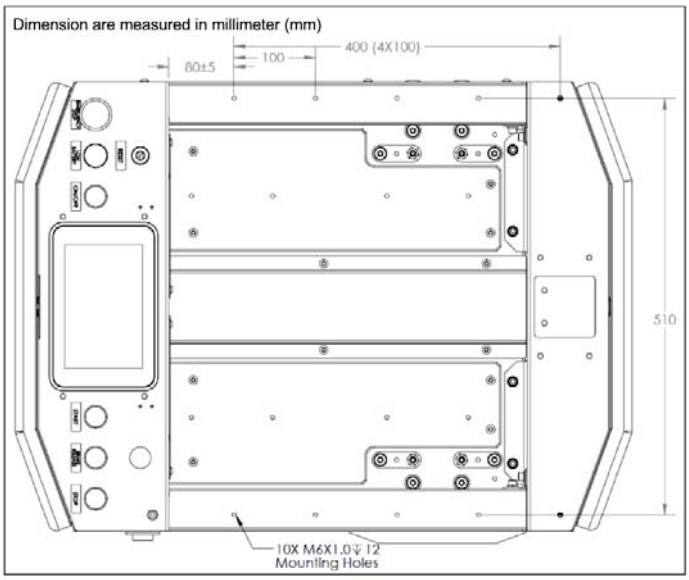

Fig. 7.5: Payload Handling Module Mounting Holes for Zalpha

7.6 Payload Handling Module Mounting Holes for Zalpha with Extension Module

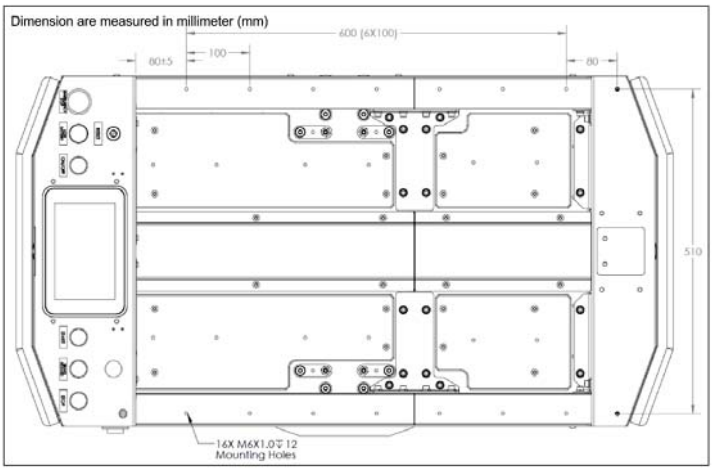

Fig. 7.6: Payload Handling Module Mounting Holes for Zalpha With Extension Module

7.7 Charger and Battery Specification

Charger:

Power Rating: 220~240V AC

Charging Voltage: 28.8V DC

Charging Ampere: 12.5A

AGV Battery:

Type: LiFePO4 Battery

Battery Voltage: 24V

Battery Capacity: 65Ah