df AUTOMATION & ROBOTICS

ZALPHA 3.3

USER MANUAL

VERSION 1.1

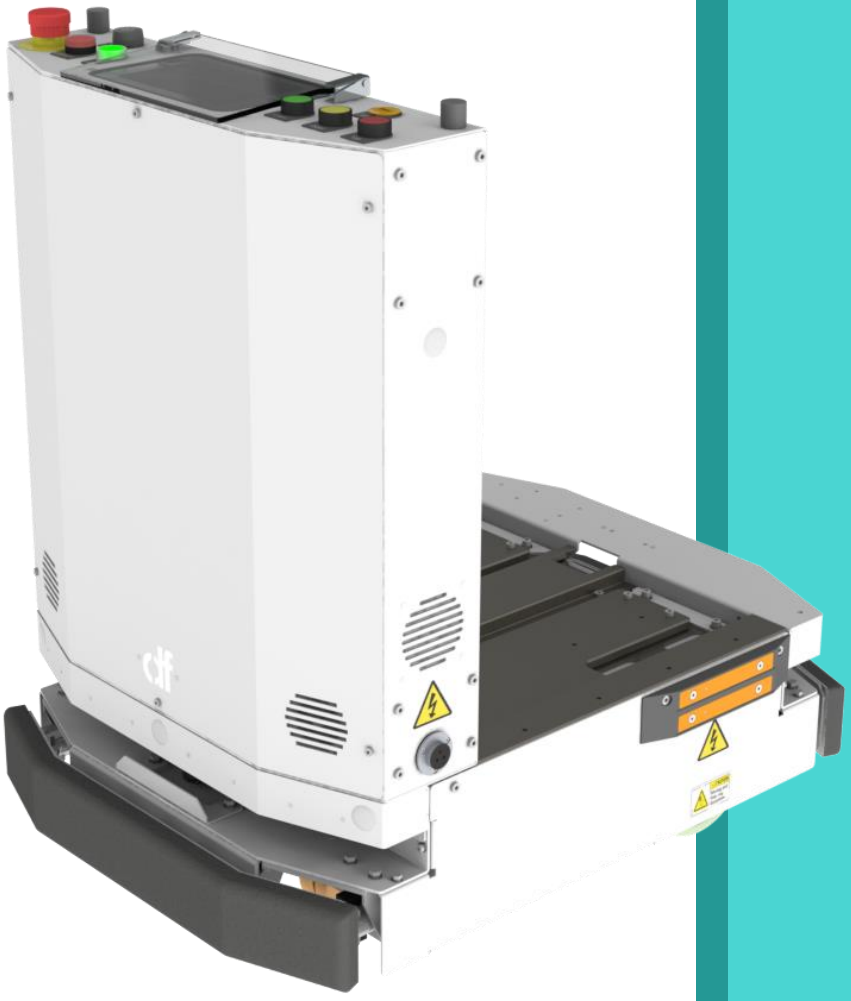

ZALPHA 3.3 User Manual

Version 1.1

Khairul Dhinie Kamaruzaman

DF Automation & Robotics Sdn. Bhd.
Tel: +607-5623547
Fax: +607-5544269
Email: sales@dfautomation.com

ZALPHA 3.3 User Manual

Copyright Notice

The information contained in here is the property of DF Automation & Robotics (M) Sdn. Bhd., and shall not be reproduced in whole or in part without prior written approval of DF Automation & Robotics (M) Sdn. Bhd. The information herein is subject to change without notice and should not be construed as a commitment by DF Automation & Robotics (M) Sdn. Bhd. The documentation is periodically reviewed and revised. DF Automation & Robotics (M) Sdn. Bhd., assumes no responsibility for any errors or omissions in the documentation. Please submit your suggestion or improvement to support@dfautomation.com.my.

This manual explains the handling and operating procedures, as well as warning information for the Autonomous Mobile Robot Model Zalpha AMR. To take full advantage of the features of this unit, read this manual thoroughly before using it. Store this manual where it can easily be referenced by anyone using this unit. This manual is applicable for Zalpha v3.3.1 onward.

Designed and Made in Malaysia.

Table of Contents

ZALPHA 3.3 USER MANUAL **1**

COPYRIGHT NOTICE **2**

TABLE OF CONTENTS **3**

TABLE OF FIGURES **5**

TABLE OF TABLES **7**

1. PREFACE **8**

SECTION 1: OVERVIEW 8
ABOUT THIS MANUAL 9
SECTION 2: DEFINITION 9

2. SAFETY **10**

SECTION 1: OVERVIEW 10
SECTION 2: GENERAL SAFETY SYMBOL AND NOTES 10
SECTION 3: VALIDITY AND RESPONSIBILITY 11
SECTION 4: INTENDED USE 11
SECTION 5: RISK ASSESSMENT 12

3. GETTING STARTED **13**

SECTION 1: PACKAGING DETAILS 13
Part 1: Basic Components: *13*
Part 2: Optional Components: *14*
SECTION 2: CHARGING STATION 15
Part 1: Charging Contact and Charging Station *16*
Part 2: Charging Station Mounting *18*
SECTION 3: TRACK SPECIFICATION 19
Part 1: Junction *19*
Part 2: Intersection *20*
Part 3: Comparison between Junction and Intersection *20*
Part 4: Minimum Turning Radius *21*
SECTION 4: POWERING UP 22
Part 1: Turn Reset Key *22*
Part 2: Release E-Stop Button *22*
Part 3: Press ON/OFF Button *22*
SECTION 5: PANEL OF ZALPHA 23
Part 1: Emergency Stop: *24*
Part 2: Low Battery Indicator: *24*
Part 3: ON/OFF Button: *24*
Part 4: LCD Touchscreen: *24*
Part 5: Start Button: *24*
Part 6: Brake Release Button: *24*
Part 7: Stop Button: *25*
Part 8: Antenna: *25*
Part 9: Reset Key: *25*
SECTION 6: CONNECT TO NAVWIZ! 26
Part 1: NavWiz PC *26*
Part 2: Create Map *26*

Part 3: Create Task Template *27*
Part 4: Run the Task Template *28*
SECTION 7: CHARGING YOUR ZALPHA 28
SECTION 8: SHUTTING DOWN ZALPHA 28

4. PRODUCT PRESENTATION 29

SECTION 1: ABOUT ZALPHA 29
SECTION 2: MODULES OF ZALPHA 29
SECTION 3: SAFETY FEATURES 31
Part 1: Front and Rear Laser Obstacle Sensor *32*
Part 2: Laser Scanning Area *33*
Part 3: Laser Scanning Obstacle Sensor Limitation *37*
Part 4: Hokuyo Obstacle Sensor Laser Scanning Profile *38*
Part 5: Front and Rear Bumper *42*
Part 6: Emergency Stop Button *42*
Part 7: External Safety Input *43*
Part 8: Safety Trigger Resume Sequences *45*
SECTION 4: LED INDICATORS 49
SECTION 5: EXPANSION IO 50
Part 1: 24V Output *51*
Part 2: Safety Input and Output Port *51*
Part 3: Input Port *52*
Part 4: Output Port *53*
SECTION 6: MAIN FEATURES OF ZALPHA 55

5. TROUBLESHOOTING 56

6. SERVICES AND MAINTENANCES 56

7. DISCLAIMER 57

8. CERTIFICATION 57

9. CHANGE LOG 60

Table of Figures

Figure 1-1 Zalpha Standard AMR 8
Figure 3-1: Charging Station 15
Figure 3-3: Charging Station of Zalpha 16
Figure 3-4: Power Cord of Charging Station 16
Figure 3-5: Manual Charging Cable 16
Figure 3-6: Zalpha Docking to Charging Station 17
Figure 3-7: Charging Station Mounting Drilling Dimension (not to scale) 18
Figure 3-8: M6 Wall Plug 18
Figure 3-9: Magnetic Tape with Adhesive 19
Figure 3-10: Junction Dimension 19
Figure 3-11: Intersection Dimension 20
Figure 3-12: Track Minimum Curving Radius (measured in mm) 21
Figure 3-13: Panel of Zalpha Standard 23
Figure 3-14: NavWiz Interface 26
Figure 3-15: Sample of a Task Template Created 27
Figure 4-1: Zalpha Standard 29
Figure 4-2: Zalpha with Extension Module 30
Figure 4-3: Safety Features of Zalpha 31
Figure 4-4: Front Laser Scanning Obstacle Sensor 32
Figure 4-5: Front Movement Laser Scanning profile 33
Figure 4-6: Reverse Movement Laser Scanning Profile 34
Figure 4-7: Rotate Left Movement Laser Scanning Profile 35
Figure 4-8: Rotate Right Movement Laser Scanning Profile 36
Figure 4-9: Laser Scanning Obstacle Sensor Limitation 37
Figure 4-10: Open the Cover of the Laser Sensor 38
Figure 4-11: Select Correct Port and Click Connect 38
Figure 4-12: Access to the USB Port 38
Figure 4-13: Click on the icon to access to edit page 39
Figure 4-14: Click on the icon to read the sensor profile from Sensor 39
Figure 4-15: Sensor Profile 39
Figure 4-16: Value Edit session for accurate area adjustment 40
Figure 4-17: Program the Sensor 40
Figure 4-18: Save the Profile (.arax) to Local Drive 41
Figure 4-19: Load the Profile (.arax) from Local Drive 41
Figure 4-20: Front Bumper on Zalpha 42

Figure 4-21: Emergency Stop Button 42
Figure 4-22: Brake Release Button 43
Figure 4-23: Steps to open manual line follow app 43
Figure 4-24: Free Motor option Manual Line Follow app 44
Figure 4-25: Manual Charging Port of Zalpha 44
Figure 4-26: Obstacle Blocked Safety Triggered Message 45
Figure 4-27: Bumper Blocked Safety Triggered Message 46
Figure 4-28: Safety Resume Message 46
Figure 4-29: Emergency Button Pressed Safety Triggered 47
Figure 4-30: Safety Resuming Message 47
Figure 4-31: Charger Connected Safety Triggered Message 48
Figure 4-32: Safety Resume Message 48
Figure 4-33: Zalpha Standard and Extension Expansion IO 50
Figure 4-34: Zalpha Lowbed Expansion IO 50
Figure 4-35: Expansion IO 24V Power Port 51
Figure 4-36: Expansion IO Safety Input and Output Port 51
Figure 4-37: Expansion IO Input Port 52
Figure 4-38: Input Port Example 1 52
Figure 4-39: Input Port Example 2 53
Figure 4-40: Input Port Example 3 53
Figure 4-41: Expansion IO Output Port 53
Figure 4-42: Output Port Example 1 54
Figure 4-43: Output Port Example 2 54

Table of Tables

Table 3-1: Junction vs Intersection 20
Table 3-2: NavWiz Username and Password 26
Table 3-3: Task Template Action 27
Table 4-1: Laser Scanning Area Colour Code 33
Table 4-2: LED Indicators of Zalpha 49
Table 5-1. Troubleshooting Guide 56

1. Preface

Section 1: Overview

The manual contains instructions for installing and using the Zalpha AMR. It consists of Zalpha AMR specification. This manual is intended for the integrator who is expected to have a basic level of mechanical and electrical knowledge.

It is also helpful, though not necessary, to be familiar with elementary concepts of programming. No special knowledge about AMR in general or DF Automation & Robotics is required.

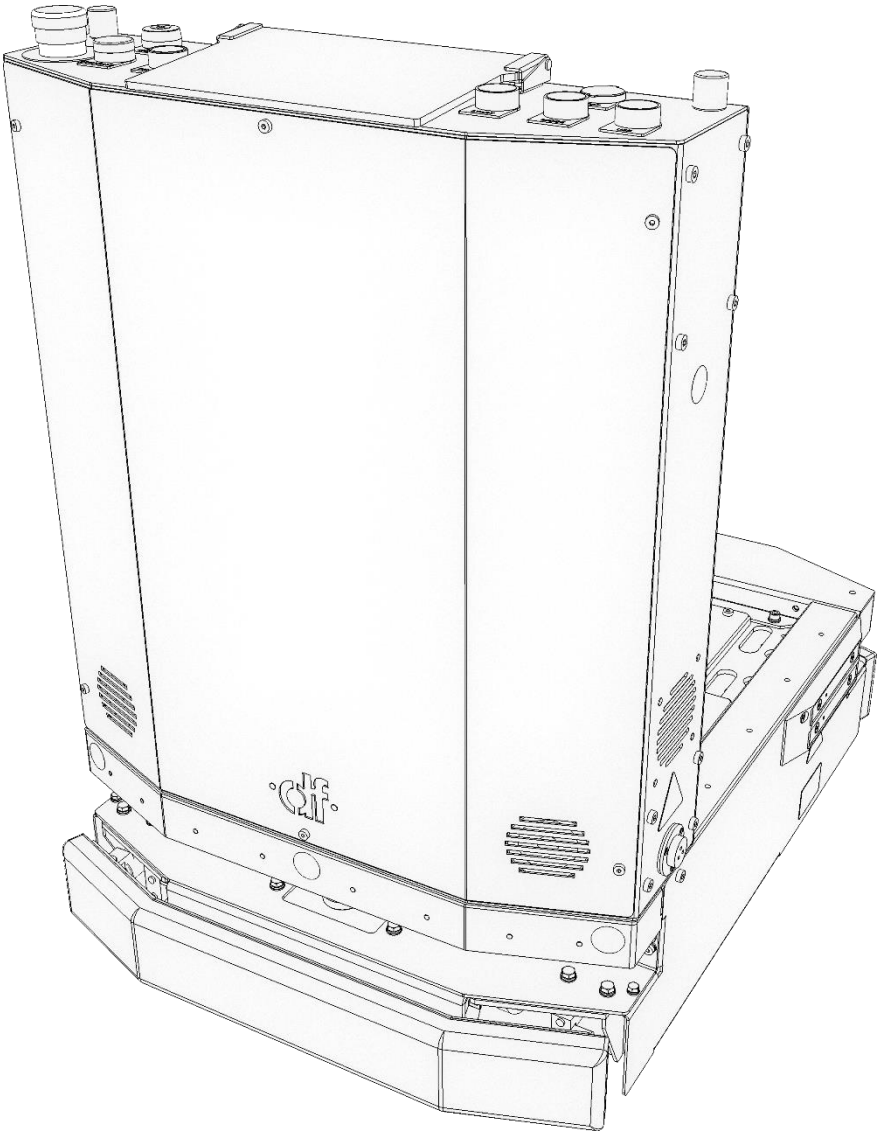

Figure 1-1 Zalpha Standard AMR

About This Manual

Congratulations on the purchase of your Zalpha AMR by DF Automation & Robotics (M) Sdn. Bhd. The DF Zalpha AMR (Autonomous Mobile Robot) is a mobile robot that can be used to transport many different types of material including pallets, rolls, racks, carts, trolleys and containers.

DF Zalpha AMR is configurable to use different navigation methods - magnetic track guided and trackless laser guided. With our NavWiz system, the automation of materials transportation will be in-a-snap-of-finger.

Section 2: Definition

This section explains certain terms that will be occasionally used in this manual. Certain terms can be considered common. However certain terms are exclusive for this product specifically. Thus, it is of upmost important that user is familiar with each of this term.

Zalpha:
Zalpha refers to the robot itself. It includes the body module, left and right drive modules, battery, front and rear sensor modules and panel module.

AMR:
Autonomous Mobile Robots or AMRs, are a self-guided transport outfitted with software and intelligent sensors that enable it to understand its operating environment and to work collaboratively with humans.

Module:
Zalpha AMR is combination of several modules, each module serves different function for the robot.
For example, Drive Module consists of the motor controller and motor that used to drive the robot.

Payload Handling Module:
It refers to anything that attached to the robot to handle your material.
It can be a rack, a cabinet or even an articulated robot.
For DF Zalpha AMR, there are several payload handling modules such as Hooking and Towing module available as an optional purchase.

2. Safety

Section 1: Overview

This chapter contains important safety information, which must be read and understood by the integrator of Zalpha AMR. It is essential that all instructions and guidance provided in other chapters and parts of this manual are observed and followed.

Section 2: General Safety Symbol and Notes

Danger:
Indicates an immanently hazardous situation that will result in death or severe personal injury, or major damage to the equipment, if proper precautions are not taken.

Warning:
Indicates a potentially hazardous situation that **could** result in death or severe personal injury, or major damage to the equipment, if proper precautions are not taken.

Caution:
Indicates a situation that **could** result in minor personal injury or damage to the equipment if proper precautions are not taken.

Mandatory:
Indicates an action that **will** result in property damage if not conducted properly.

Notice:
Indicates a situation that **could** result in property damage if proper precautions are not taken.

Info:
Indicates a situation that **could** result in easier access of certain functions or task completion

Section 3: Validity and Responsibility

The information does not cover how to design, install and operate a complete AMR application, nor does it cover all peripheral equipment that can influence the safety of the complete system. The complete system must be designed and installed in accordance with the safety requirements set forth in the standards and regulations of the country where the AMR is installed.

The integrators of Zalpha AMR are responsible for ensuring that the applicable safety laws and regulations in the country concerned are observed and that any significant hazards in the complete AMR application are eliminated

- ✓ Making a risk assessment for the complete system;
- ✓ Interfacing other machines and additional safety devices if defined by the risk assessment;
- ✓ Ensuring that the user will not modify any safety measures;
- ✓ Validating that the total system is designed and installed correctly;
- ✓ Specify instructions for use;
- ✓ Marking the AMR installation with relevant signs and contact information of integrator.
- ✓ Collecting all documentation in a technical file; including the risk assessment and this manual

Section 4: Intended Use

Zalpha AMRs are industrial robot which intended for transporting materials such as pallets, rolls, racks, carts, trolleys and containers in a workspace. Industries currently utilizing AMRs include (but are not limited to): Manufacturing, Pharmaceutical, Chemical, Automotive, Warehousing, Food & Beverage and Hospital.

Warning:
Any use of application deviating from the intended use is deemed to be impermissible misuse. This includes, but is not limited to:

- x The rated performance levels are insufficient;
- x The performance of the safety functions is insufficient;
- x Potentially explosive environments
- x Medical and life critical applications;
- x Before performing a risk assessment;
- x As a climbing aid;
- x Operation outside the permissible operating parameters.

Section 5: Risk Assessment

One of the most important things that an integrator needs to do is to make a risk assessment. In many countries this is required by law. The AMR itself is completed mobile robot, as the safety of the AMR installation depends on how the AMR is integrated.

The risk assessment that the integrator conducts shall consider all work procedures throughout the lifetime of the AMR application, including but not limited to:

- ✓ Program the AMR during setup and development of the AMR installation;
- ✓ Troubleshooting and maintenance;
- ✓ Normal operation of the robot installation.

A risk assessment must be conducted before the AMR is powered on for the first time. A part of the risk assessment conducted by the integrator is to identify the proper safety configuration settings, as well as the need for additional emergency stop buttons and / or other protective measures required for the specific AMR application.

3. Getting Started

Section 1: Packaging Details

Part 1: Basic Components:

One fully-assembled Zalpha with NavWiz system installed

The AMR includes the Sensor Modules (front and rear bumper and a laser scanning obstacle sensor), Panel Module, left and right Drive Modules, a manual charging port, a charger contact and battery.

Automatic Charging Station

Every Zalpha come with its own Automatic Charging Station, together with a power cord with BS 1363 (Type G) Plug and C13/C14 Coupler and a manual charging cable. The power rating of the charger is 220V~240V AC by default (110V AC upon request).

Danger:

Powering up the charging station with incorrect power rating will damage the charger and has the chance of causing fire.

Printed Documentation file

With every purchase of Zalpha, a series of printed document including the User Manual, Maintenances Manual and Warranty Certificates of the particular AMR will be provided.

Part 2: Optional Components:

Extension Module

With purchase of Zalpha Extension Module, the module will be assembled to Zalpha, unless otherwise stated.

Hooking Module

With purchase of Zalpha Hooking Module, the module will be assembled to Zalpha, unless otherwise stated.

Note: Hooking Module will be bundled together with Extension Module.

Towing Module

With purchase of Zalpha Towing Module, the module will be assembled to Zalpha, unless otherwise stated.

LCD Touchscreen Protective Cover

With purchase of the LCD Touchscreen Protective Cover, the module will be assembled to Zalpha, unless otherwise stated.

DFleet

With purchase of DFleet, a Fleet Management System server will be bundled together and Zalpha will be enabled into fleet mode, unless otherwise stated.

Info:
DFleet server not intended to provide desktop computer operating function. It is a FMS controller only. A separate computer terminal required to perform operation or changes.

Additional laser scanning obstacle sensor

The basic components of Zalpha MG come with a laser scanning obstacle sensor which will be mounted on either front or rear Sensor Module. Additional laser scanning obstacle sensor is available as an optional purchase.

Note: Basic component of Zalpha TS come with both front and rear trackless laser sensor.

User-Supplied Components:

- ✓ Wi-Fi enabled PC with browser installed
- ✓ Google Chrome Version 54.0 and above or Mozilla Firefox 49.0 and above is recommended

Section 2: Charging Station

Each Zalpha AMR will have its dedicated charging station. In the ConfigPanel, the Station where the Charging Station is placed normally will be configured as the Home Station. Defining the Charging Station as the Home Station is to restrict all rotating actions of Zalpha at the Charging Station. By doing so, the AMR will approach the station in only one heading direction. If the travel direction of the AMR is opposed with the heading direction of the Charging Station, Zalpha will perform a U-turn at the junction before the Charging Station and reverse dock to the Charging Station.

Caution:
Not defining the Charging Station as the Home Station will cause Zalpha to rotate at the Charging Station. If that happen, Zalpha will collide with the charger and cause damage on the charger and AMR.

Notice:
Charger of Zalpha must be mounted on the same side of the Charging Contact of the AMR.

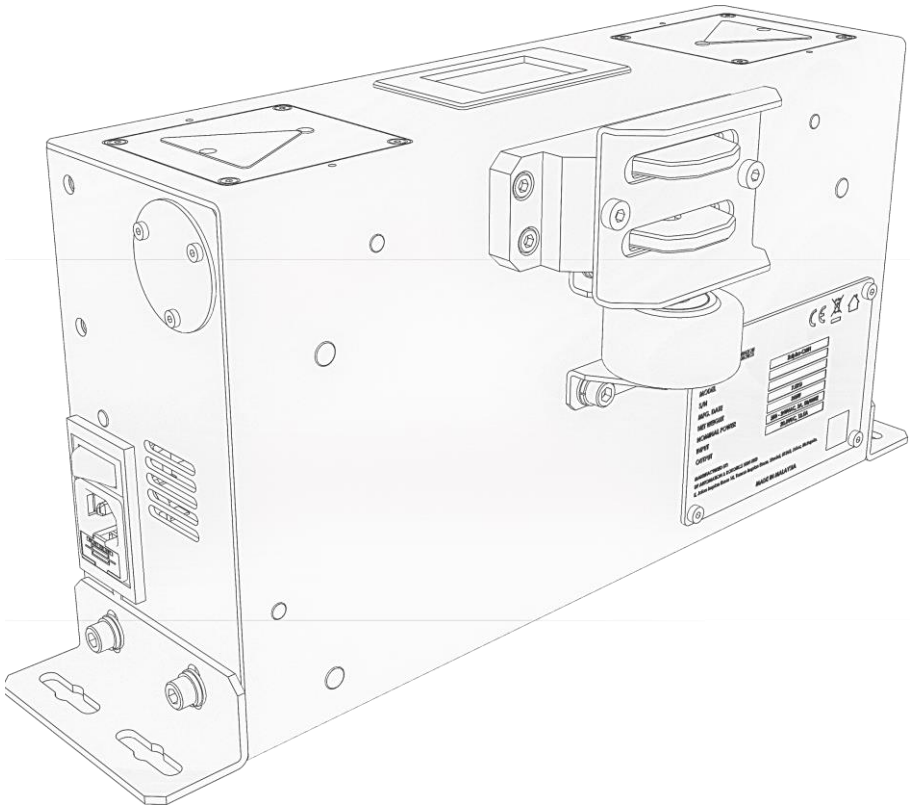

Figure 3-1: Charging Station

Part 1: Charging Contact and Charging Station

The Charging Contact of Zalpha is located at the side of the AMR. The Charging Contact is configurable to either left or right side of the AMR. Changing side for the Charging Contact will involve some rewiring work. Please contact authorized personnel to perform the changes.

Warning:

Improper installation of the Charging Contact can cause damage to the AMR.

Figure on the left shows the Charging Station of Zalpha. The Charging Station consists of two guide wheels at the side, and a spring-loaded Charging Contact at the middle.

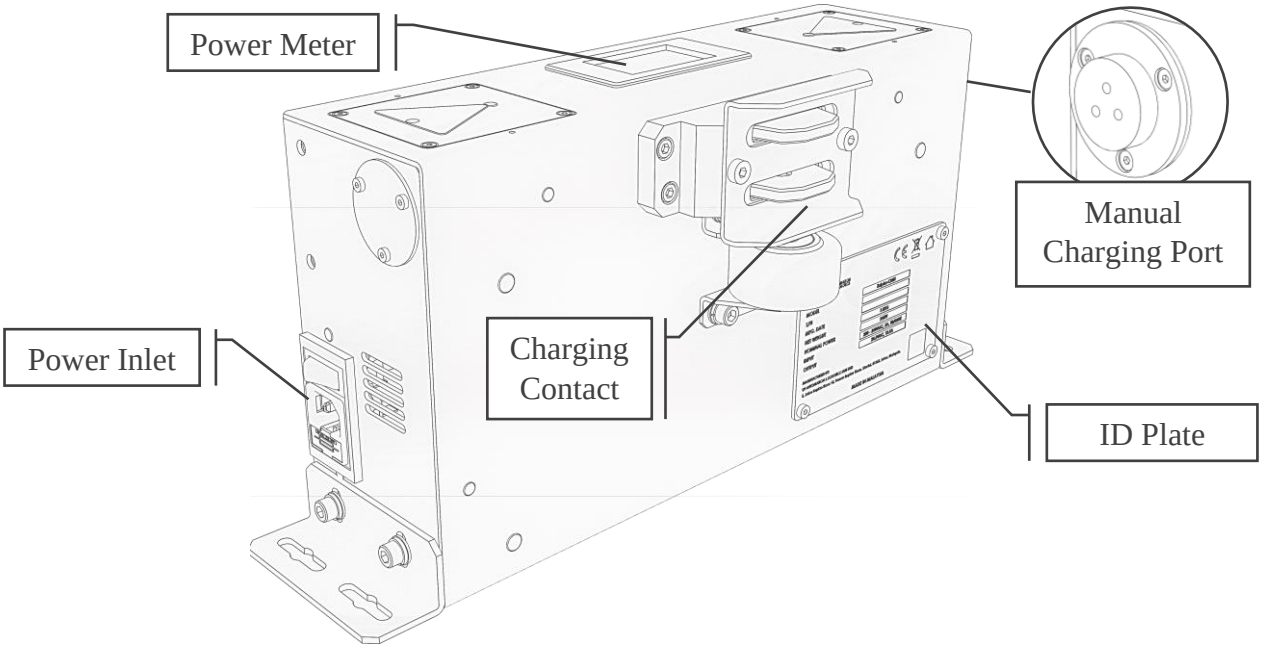

Figure 3-2: Charging Station of Zalpha

The rated charging voltage and current of the charger are 28.8V and 12.5A. At the side of the Charging Station, there are Manual Charging Port and the power inlet. Every Charging Station unit is provided with one Power Cable and a Manual Charging.

Figure 3-3: Power Cord of Charging Station

Figure 3-4: Manual Charging Cable

The charging station is recommended to be secured on the floor with provided wall plug before operation.

Warning:
Be extra careful when handling heavy equipment to avoid injury

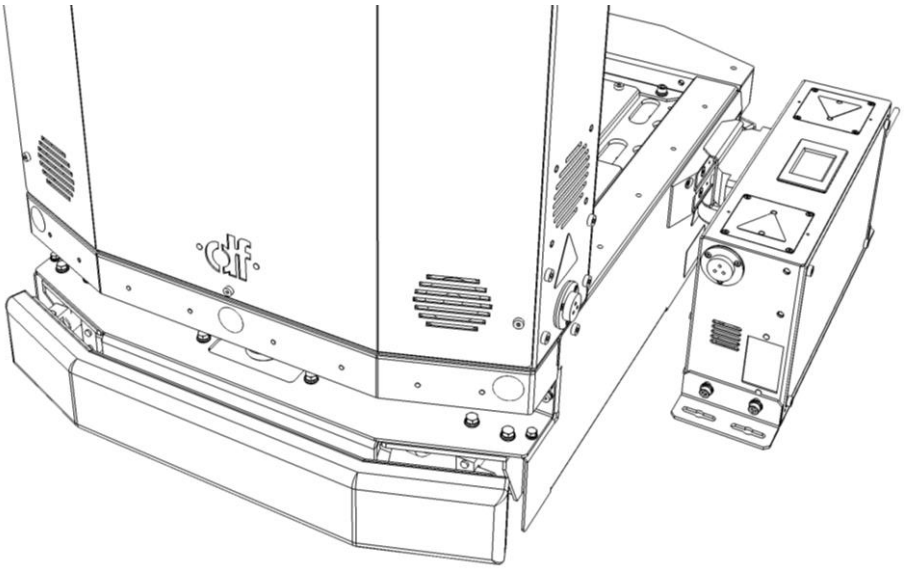

Figure 3-5: Zalpha Docking to Charging Station

Danger:
Do not touch charging contact of Zalpha or charger while AMR is docking as it will result in electrical shock.

Part 2: Charging Station Mounting

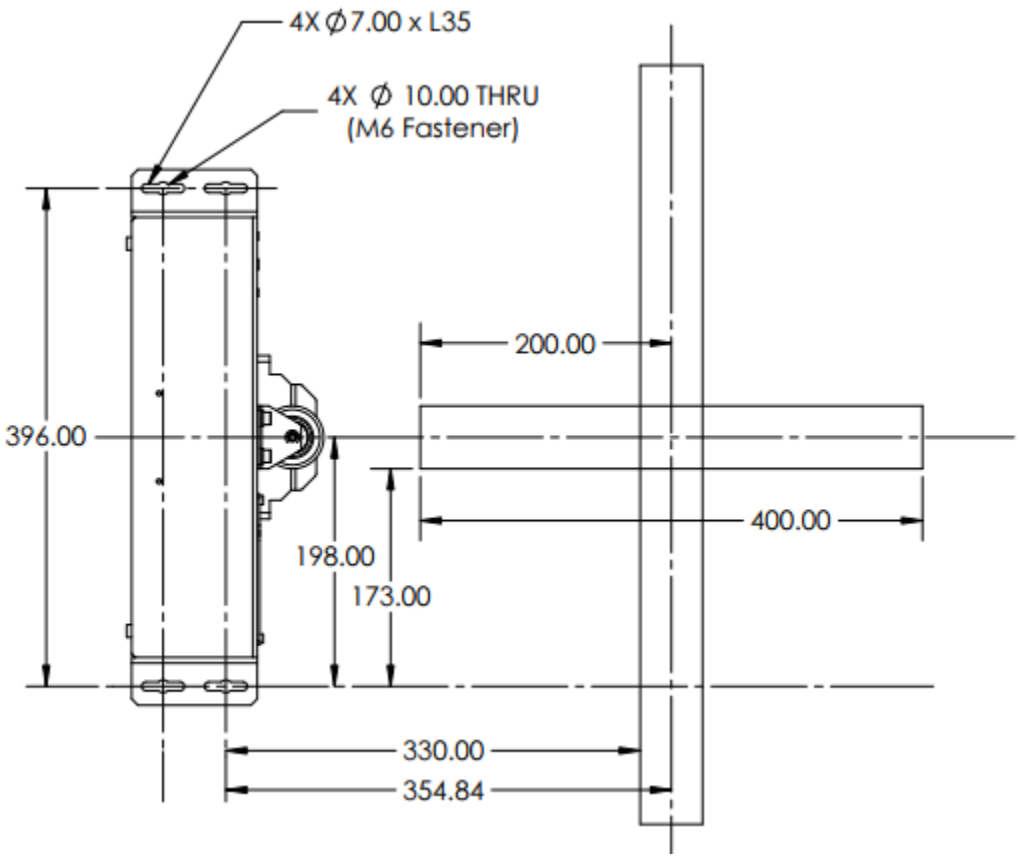

Figure 3-6: Charging Station Mounting Drilling Dimension (not to scale)

After drilling the holes, install the M6 wall plug to each of the hole.

Figure 3-7: M6 Wall Plug

Section 3: Track Specification

The basic navigation method of Zalpha is by tracing the magnetic field of the Track that lie on the floor. The Track of Zalpha is constructed using 50mm width magnetic adhesive tape. The magnetic field of the Track is in north pole face up order. The thickness of the magnetic tape is 2mm.

Figure 3-8: Magnetic Tape with Adhesive

Part 1: Junction

Junction is defined as the whisker in between a straight path. Junction is functioned as a checkpoint for the actions of Zalpha. Zalpha locate itself by counting the number of junctions it passed through along the Track. A junction can serve as a checkpoint for travel speed adjustment, changing navigation profile, station stop etc.

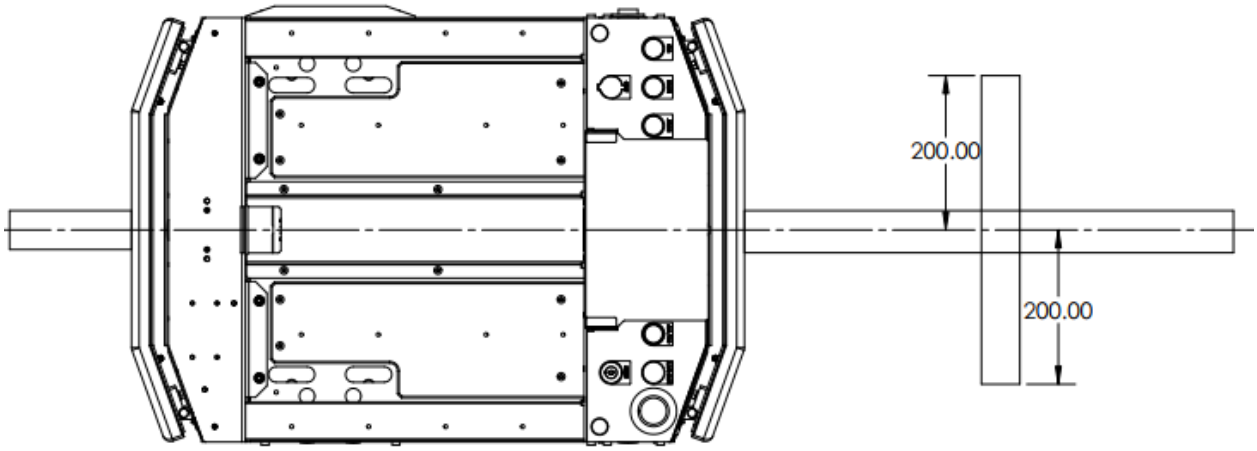

Figure 3-9: Junction Dimension

Part 2: Intersection

Intersection is defined as the merging point of two paths that perpendicular to each other. Similar to Junction, Intersection also can serve as a checkpoint for the actions of Zalpha.

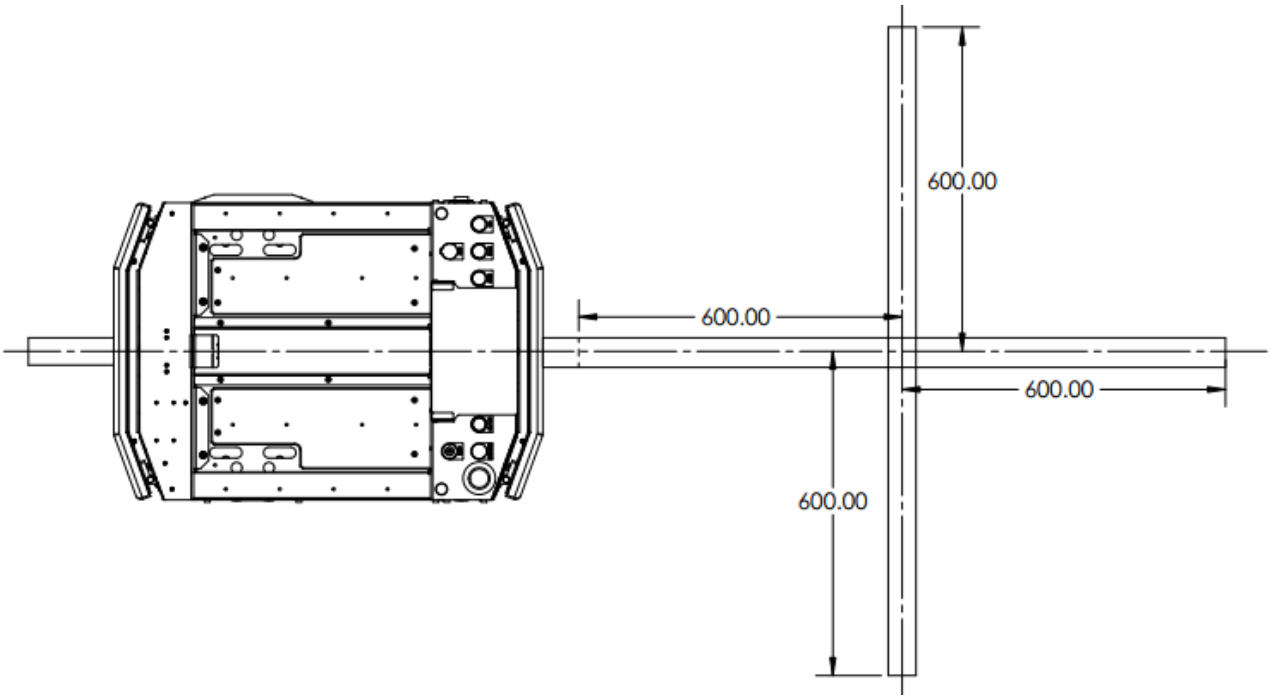

Figure 3-10: Intersection Dimension

Part 3: Comparison between Junction and Intersection

Table 3-1: Junction vs Intersection

		Types of Track	
		Junction	Intersection
Actions	Forward	√	√
	Reverse	√	√
	Rotate Left / Right	X	√
	U-turn Left / Right	√	√

Part 4: Minimum Turning Radius

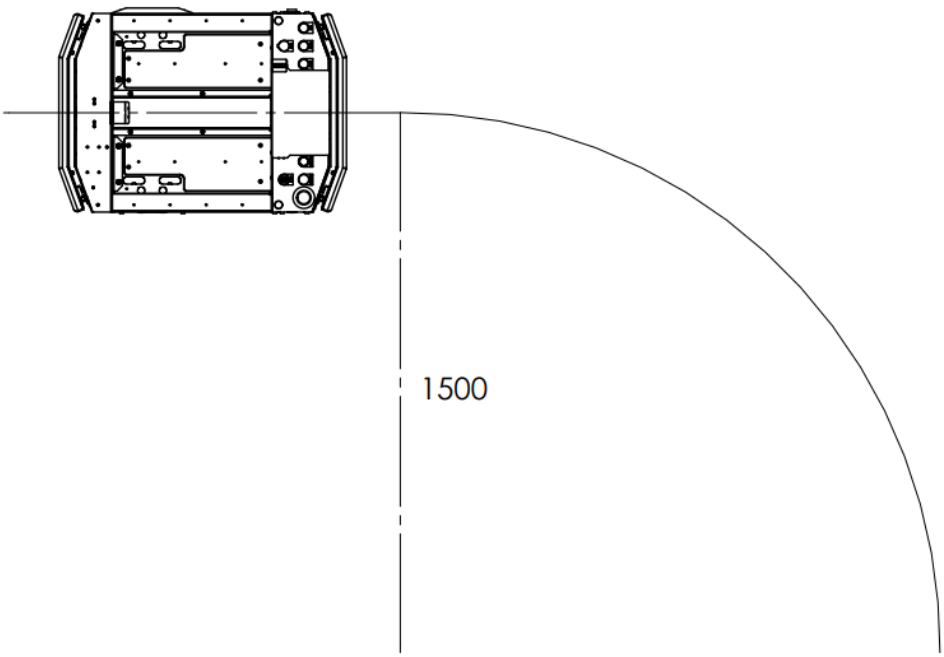

Figure 3-11: Track Minimum Curving Radius (measured in mm)

Section 4: Powering Up

Part 1: Turn Reset Key

If everything is fine, turn on with reset key.

Mandatory:
Zalpha will not be able to power on if the Reset Key switch is in OFF position as it will cut off the main power supply.

Part 2: Release E-Stop Button

Upon activation of emergency button, the movement of Zalpha will stop immediately. To release it, hold and turn the Emergency Stop button to the indicated direction on the Emergency Stop button.

Part 3: Press ON/OFF Button

Press the ON/OFF button on the Panel for 1s to power on the AMR. After the green light of the ON/OFF button lit, AMR will take approximately 40s to power up. When the LCD screen shows AMR IP address, AMR is ready for action!

Section 5: Panel of Zalpha

Panel consists of Reset Key, Emergency Stop, Low Battery Indicator, ON/OFF Button, LCD Touchscreen, Start Button, Brake Release Button, Stop Button and Antenna. The function of each component is as below:

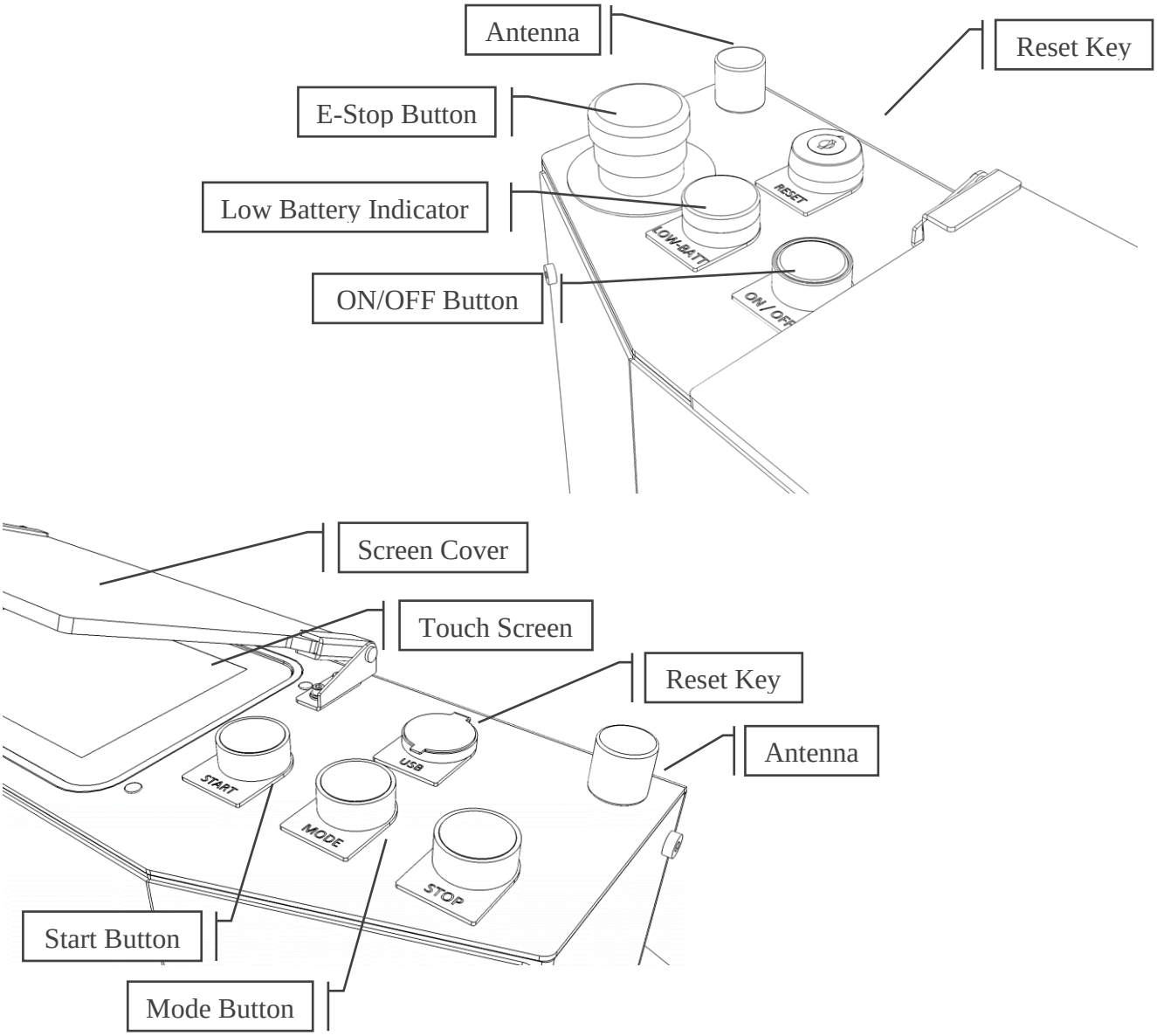

Figure 3-12: Panel of Zalpha Standard

Part 1: Emergency Stop:

Emergency Stop button for user to trigger an immediate stop on the AMR Movement. Button needed to be manually released before resuming AMR Operation.

Part 2: Low Battery Indicator:

Low Battery Indicator will light when the battery level is lower than 20%. Operations are not recommended if the Low Battery Indicator was lit up.

Caution:
Operating the AMR under low battery level may cause the AMR sudden power down or unstable operation.

Part 3: ON/OFF Button:

To power on Zalpha AMR, press and hold the ON/OFF Button for 1s. The boot up time of Zalpha AMR will take approximately 30 seconds. Zalpha AMR is ready to operate when NavWiz Boot Screen is shown.

Info:
Zalpha will not be able to power on if the Reset Key switch is in OFF position.

Part 4: LCD Touchscreen:

Display status of Zalpha AMR. It also serves as a HMI panel that allow user to interact with the AMR.

Caution:

Impact on the LCD Touchscreen with sharp edges or external force will cause the screen to break.

Part 5: Start Button:

Start Button served as an alternative for the “OK” option in Wait Acknowledge and “Yes” option in Confirm Action’s popup.

Part 6: Brake Release Button:

To release the braking mechanism of the AMR to manually move AMR with external force. For detailed brake release operation please see Brake Release, pg. 33.

Part 7: Stop Button:

Stop Button served as an alternative for the “No” option in Confirm Action’s popup.

Part 8: Antenna:

Zalpha AMR’s Wi-Fi transmitter and receiver.

Part 9: Reset Key:

The function of Reset Key switch is to perform a hard reset the AMR System under special condition, e.g. Zalpha AMR was not able to perform a reboot under normal standard operation procedure. The key of the Reset Key switch should be kept by authorized personnel. Turning the Reset Key switch will cut off the main power supply of Zalpha AMR controller.

Warning:

Under normal operation, turning the Reset Key is NOT recommended.

Improper usage of Reset Key may cause damage to Zalpha AMR’s electrical hardware and software.

Info:
Zalpha will not be able to power on if the Reset Key switch is in OFF position.

Section 6: Connect to NavWiz!

Connect to the same WIFI as AMR, open the web browser and key in the IP address, as simple as that!

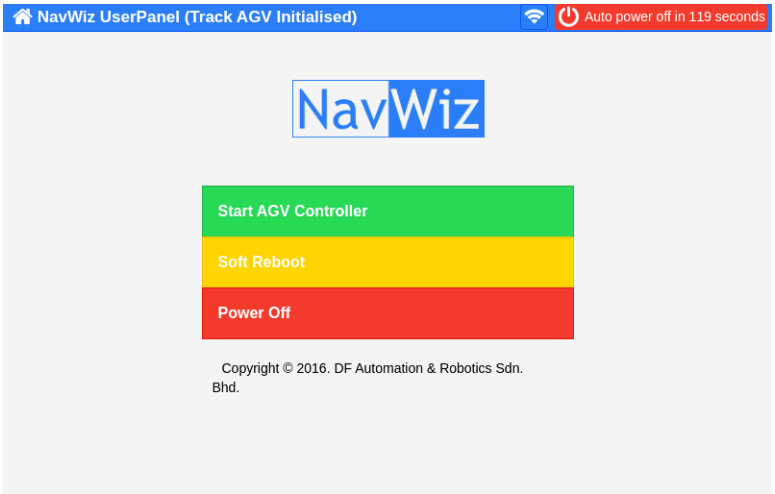

Figure 3-13: NavWiz Interface

Part 1: NavWiz PC

NavWiz UserPanel and ConfigPanel can be accessed from a laptop or PC when they are connected to the same network. Type the IP address that displays on the LCD Panel of Zalpha into address bar of browser (**Google Chrome Version 54.0** and above or **Mozilla Firefox 49.0** and above). By default, Guest account is logged into NavWiz. To login to another account, click on the "Guest" button > Login on the top right corner and insert the username and password below to login.

Table 3-2: NavWiz Username and Password

Username	supervisor
Password	dfautomation

Part 2: Create Map

In NavWiz ConfigPanel, you will be able to edit the map under "Map" tab. The map should be exactly the same as the track you have placed including every Junction and Intersection. Remember to save your changes and perform a soft reboot to apply the changes. Details explanation can be found in NavWiz User Manual.

Part 3: Create Task Template

Task Template is an important element in NavWiz System as it controls all operation of Zalpha. To access it, go to "NavWiz ConfigPanel" > System > Task Template and click on the "Add new task template button". In order to test the functionality of Zalpha, the following will be a very brief guide on creating task template. Make sure that the box "Active" and "Top-level template" is ticked. Please remember to save the changes.

Figure on the right show a very basic task template. All actions are joined using arrow line which determines the operation flow chart. Upon starting this Task Template, Zalpha will perform the action in sequence:

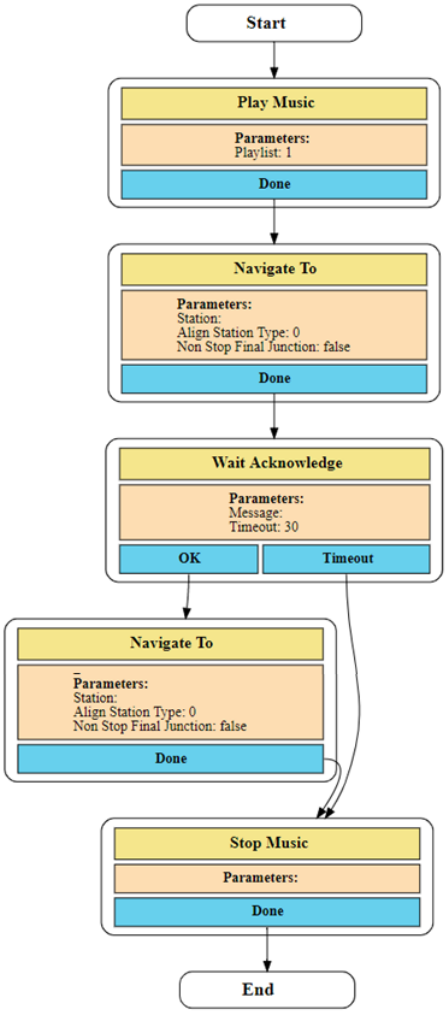

Figure 3-14: Sample of a Task Template Created

Table 3-3: Task Template Action

Task Template	Description
Play Music	Zalpha will start to play a predefined music file.
Navigate To	Zalpha will move to the configured station, in this case S1.
Wait Acknowledge	Zalpha will wait for user input on the LCD panel. This action comes with 2 different results, "OK" and "Timeout" (configured to 30s in this case). If it received user acknowledgement on LCD panel, the result will be "OK", then the execution will jump to step 4. If the result is "Timeout", this implies that user does not acknowledge it on LCD panel after 30s, then the execution will jump to step 5.
Navigate To	Zalpha will move to the configured station, in this case S2
Stop Music	Zalpha will stop the music playback

After all steps are executed, this task template will end. Please refer to NavWiz User Manual for more details.

Part 4: Run the Task Template

Now, in NavWiz, under "Task Runner", you will be able to see the Task Template created previously. Click on it to run that Task Template and observe does Zalpha work as you expected. This will be able to test its functionality.

Section 7: Charging your Zalpha

There are two methods of charging the Zalpha, auto or manual charging. The power rating of charger is 220V~240V AC by default. When battery level is lower than 20%, Low Battery Indicator will lit. Operations are not recommended when battery level is 20% or below.

Danger:
Powering up the charging station with incorrect power rating will damage the charger and has the chance of causing fire.

Caution:
Operating the AMR under low battery level may cause the AMR sudden power down or unstable operation.

Section 8: Shutting down Zalpha

After used, it is recommended to shut down Zalpha. Click "On/Off" button on NavWiz interface to turn it off.

Warning:
It is **not recommended** to shut down Zalpha using reset key under normal operation, as reset key act as the last option and hard reset of AMR system under special condition. (In case Zalpha has not response on its NavWiz interface, or any other error which caused Zalpha cannot be manually control).

Caution:
Improper usage of **Reset Key** may cause damage to AMR's electrical hardware and software.

4. Product Presentation

Section 1: About Zalpha

Zalpha is a powerful automatic guided vehicle (AMR) which can handle up to 500kg of towing payload. Zalpha is definitely a well-built solution to reduce manpower in warehouses, industrial factories and production lines.

Zalpha is a user-friendly AMR which operates based on a web-based operating system called NavWiz. In NavWiz, different tasks and actions can be combined into a template systematically and the task runner will perform all the instructions accurately. User can create maps in NavWiz to run Zalpha and the routes can be saved in the system.

Zalpha AMR is our standard solution which is configurable to use different navigation methods - magnetic track guided or trackless laser guided.

Section 2: Modules of Zalpha

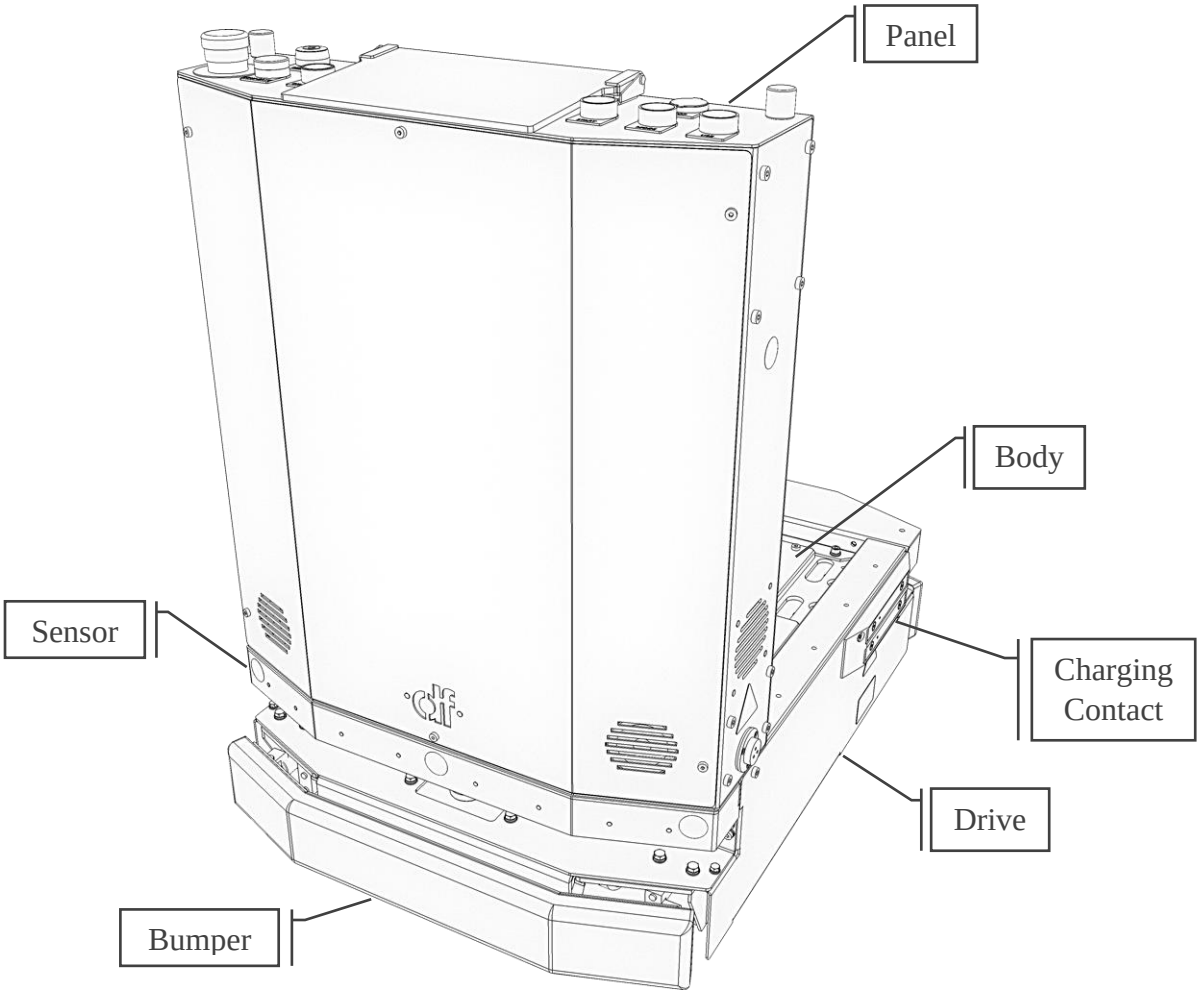

Figure 4-1: Zalpha Standard

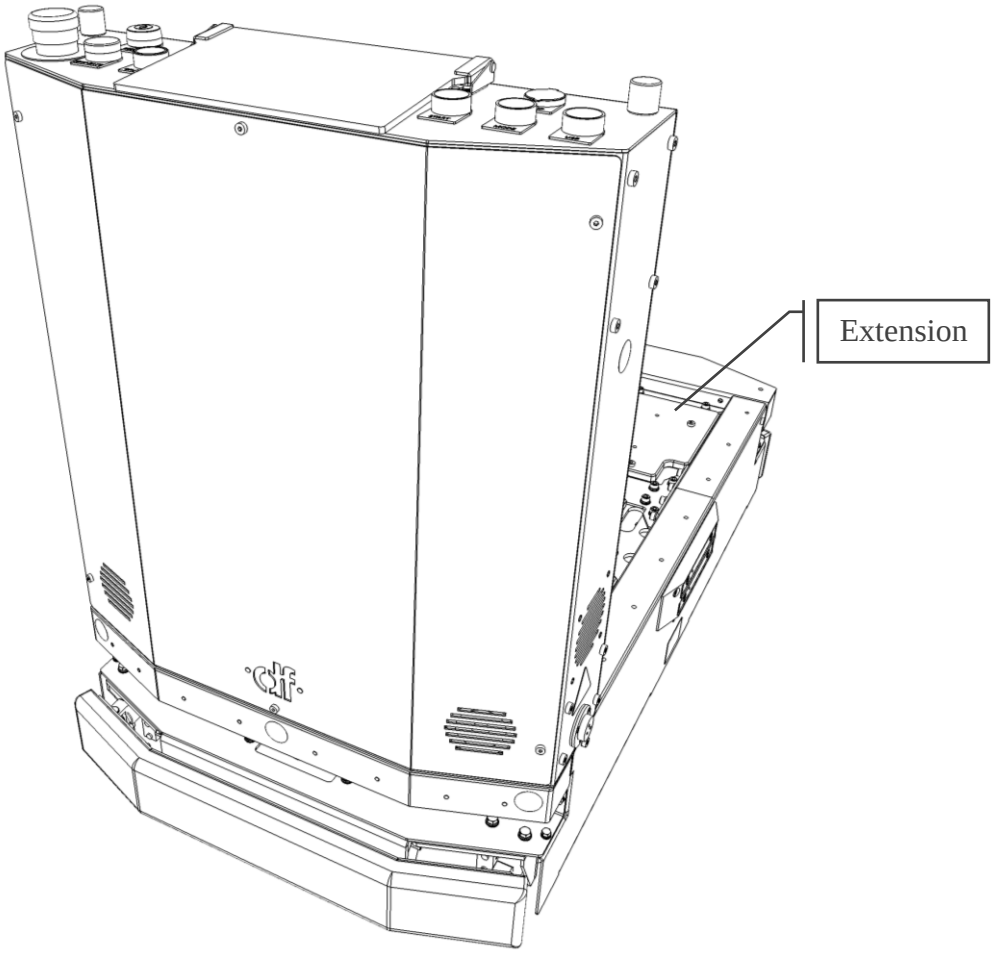

Figure 4-2: Zalpha with Extension Module

Section 3: Safety Features

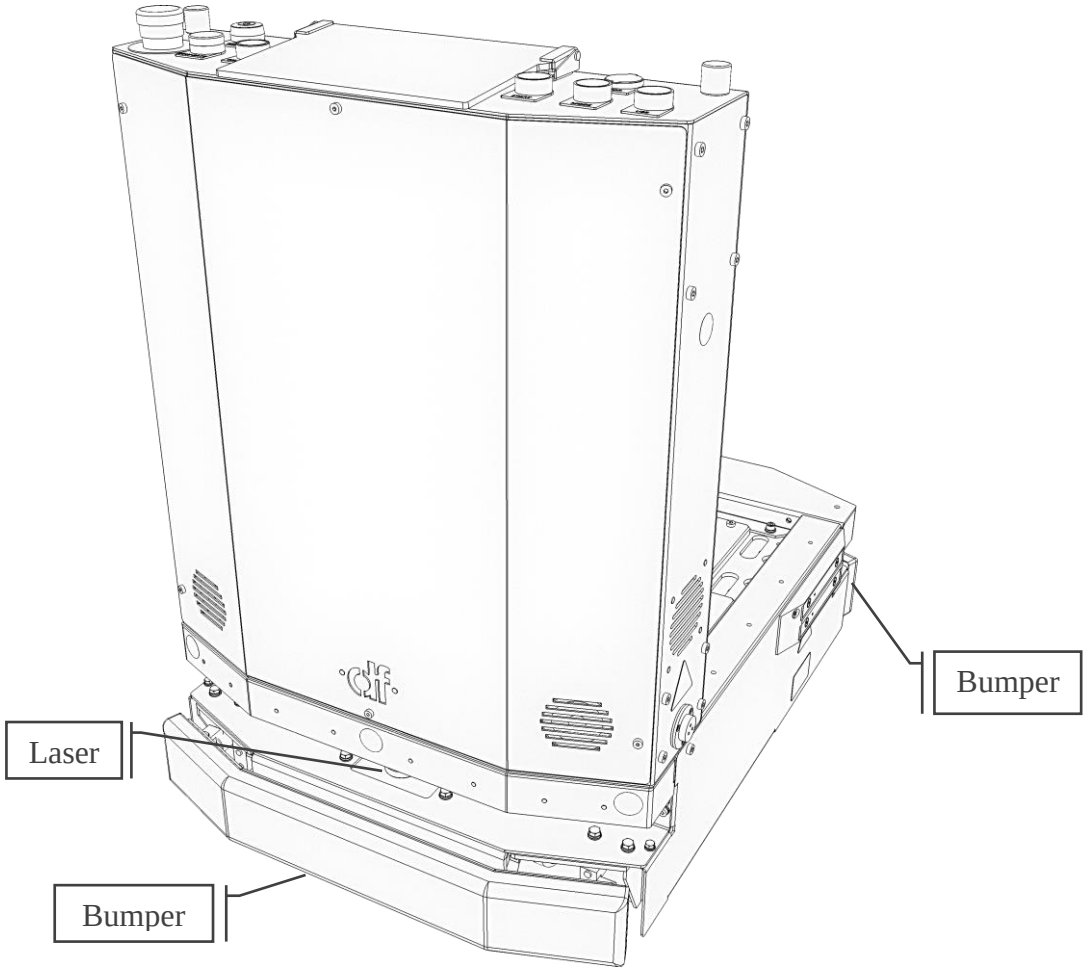

Figure 4-3: Safety Features of Zalpha

Part 1: Front and Rear Laser Obstacle Sensor

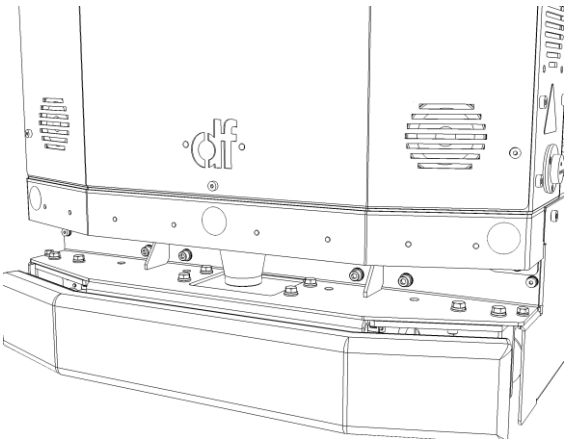

Figure 4-4: Front Laser Scanning Obstacle Sensor

Zalpha front laser scanning Obstacle Sensor is located underneath the Panel Module.

While Zalpha AMR is moving, the laser scanning Obstacle Sensor will scan and locate obstacle in front of Zalpha.

When obstacle is presence, the Obstacle Sensor will alert Zalpha to slow down as it gets closer to the obstacle and stop when Zalpha is too close to the obstacle.

This is to avoid physical impact between Zalpha and the obstacle.

After the obstacle is removed, Zalpha AMR will continue its operation automatically.

Info:
Rear Obstacle Sensor is not included in standard package of Zalpha. It is available as an optional purchase.

Part 2: Laser Scanning Area

There are three layers in the Laser Scanning Area - Far, Middle and Near.

Table 4-1: Laser Scanning Area Colour Code

Color Code	Area
	Far
	Middle
	Near

Laser scanning profile for Forward Movement:

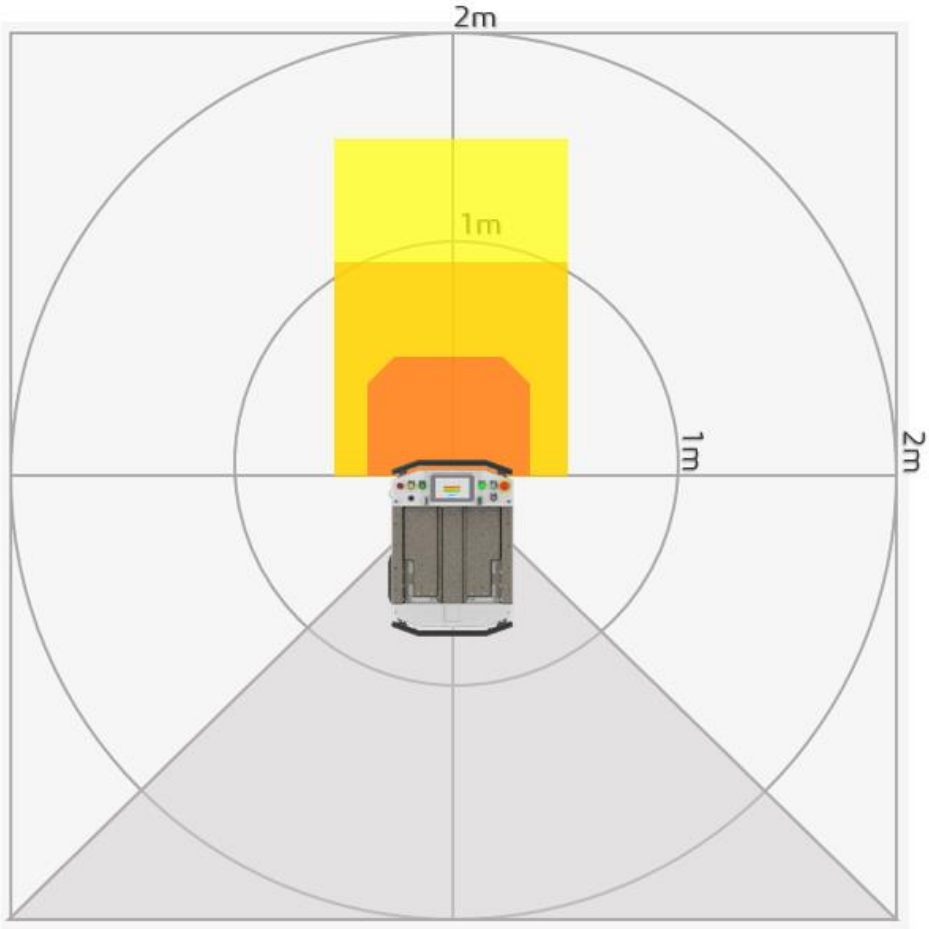

Color Code	Max Allowed Speed (m/s)
	0.45
	0.30
	0.15

Figure 4-5: Front Movement Laser Scanning profile

Laser scanning profile for Reverse Movement

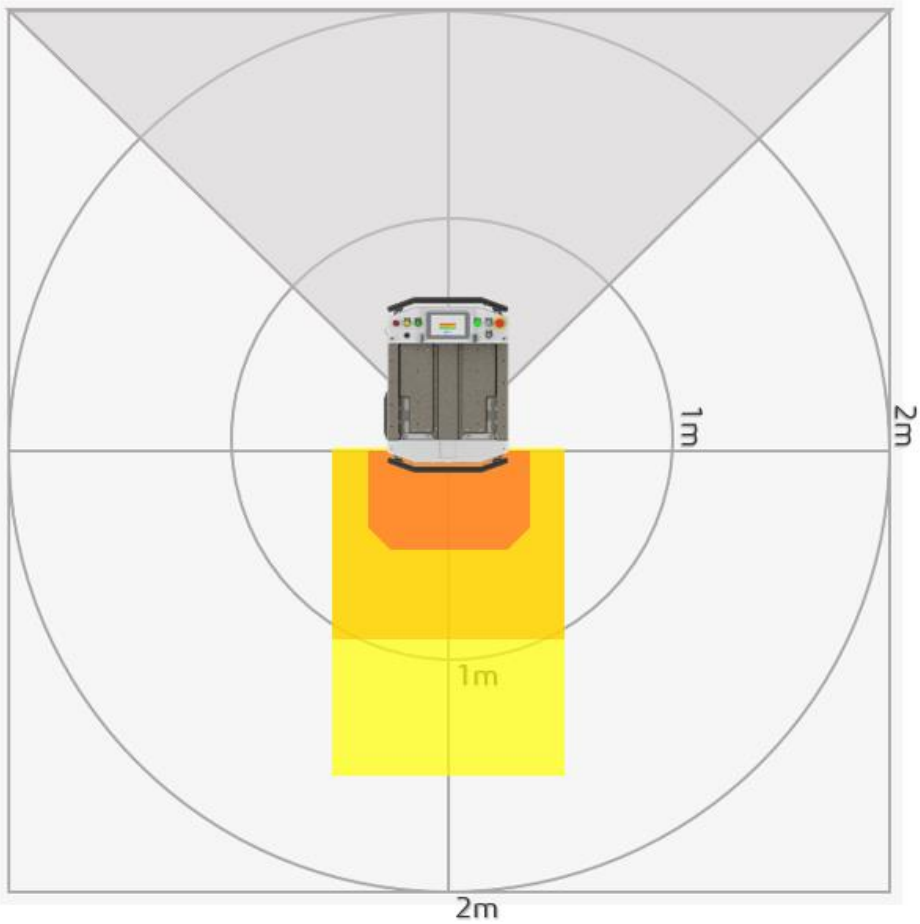

Color Code	Max Allowed Speed (m/s)
	0.45
	0.30
	0.15

Figure 4-6: Reverse Movement Laser Scanning Profile

Info:
Rear Obstacle Sensor is not included in standard package of Zalpha AMR. It is available as an optional purchase.

Laser scanning profile for Rotate Left Movement

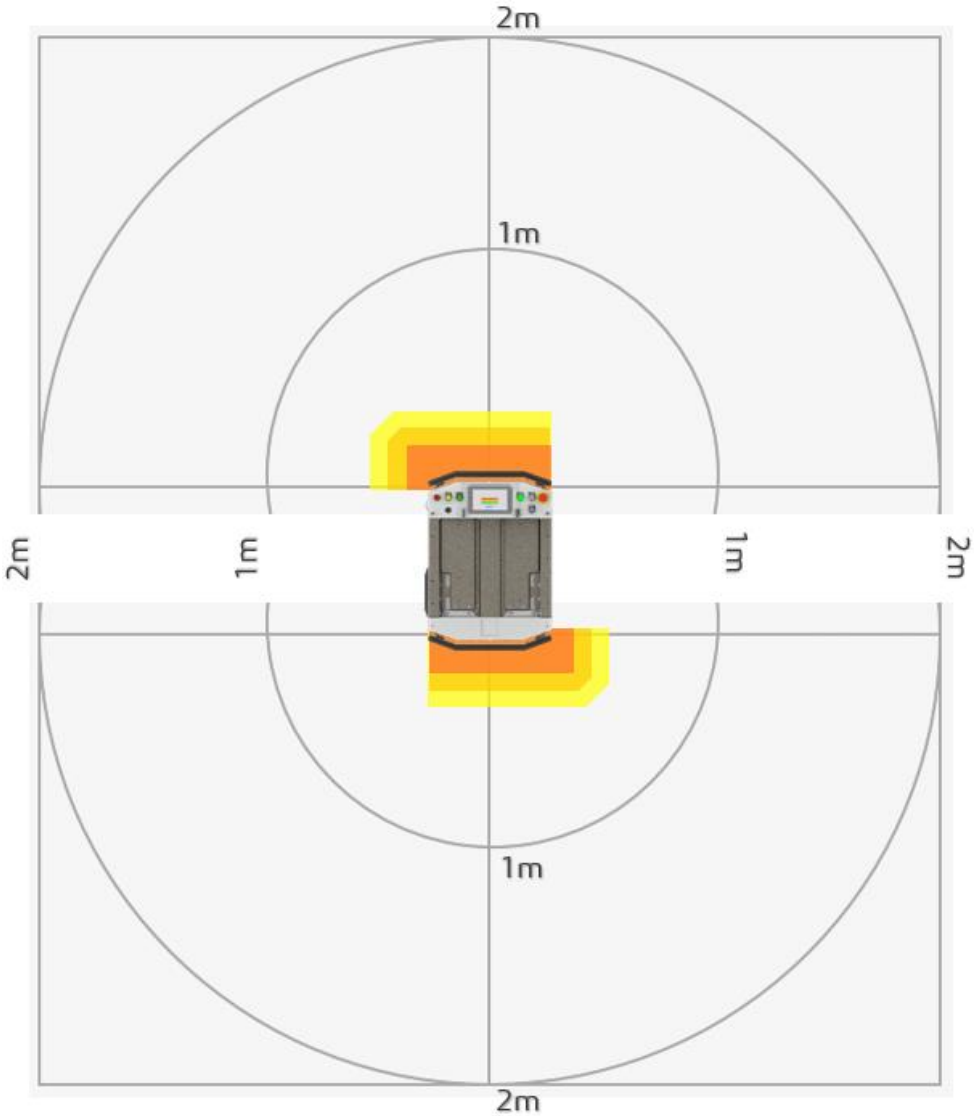

Color Code	Max Allowed Speed (rad/s)
	Unlimited
	Unlimited
	0.15

Figure 4-7: Rotate Left Movement Laser Scanning Profile

Info:
Rear Obstacle Sensor is not included in standard package of Zalpha AMR. It is available as an optional purchase.

Laser scanning profile for Rotate Right Movement

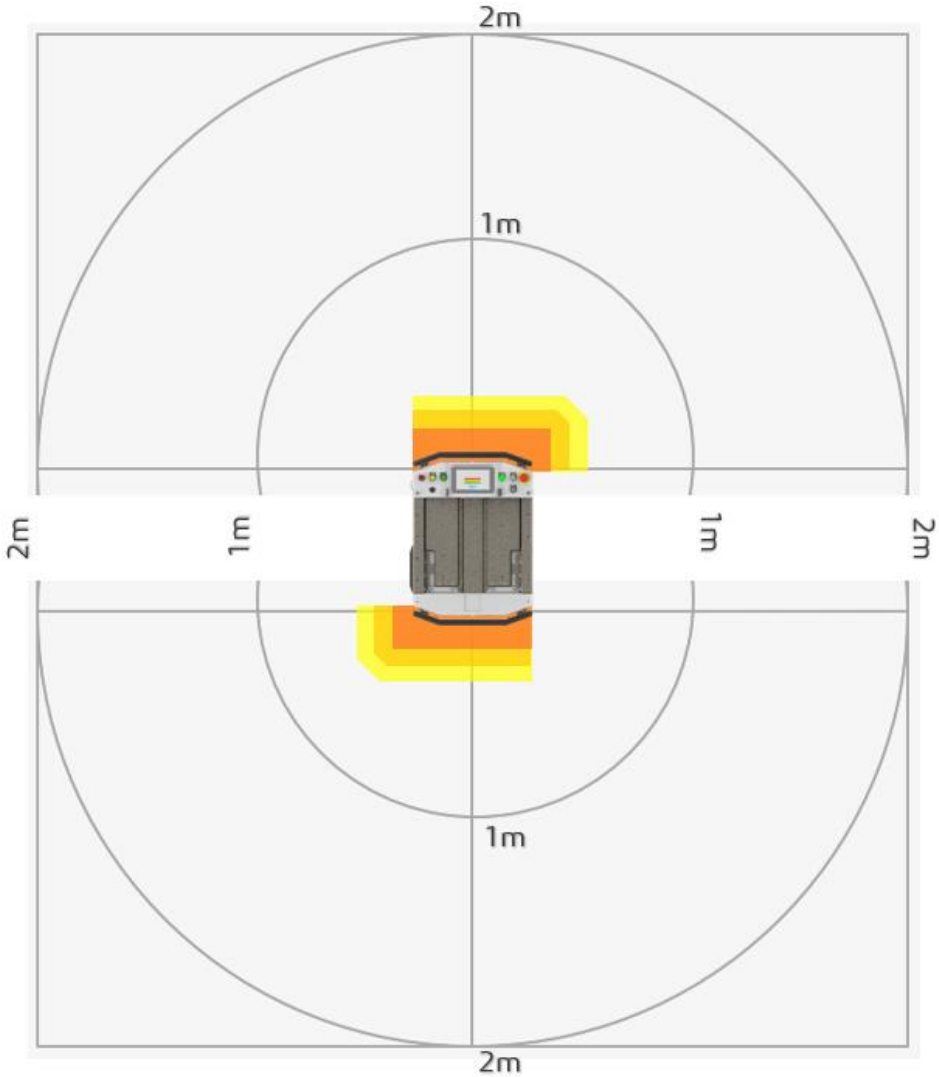

Color Code	Max Allowed Speed (rad/s)
	Unlimited
	Unlimited
	0.15

Figure 4-8: Rotate Right Movement Laser Scanning Profile

Info:
Rear Obstacle Sensor is not included in standard package of Zalpha AMR. It is available as an optional purchase.

Part 3: Laser Scanning Obstacle Sensor Limitation

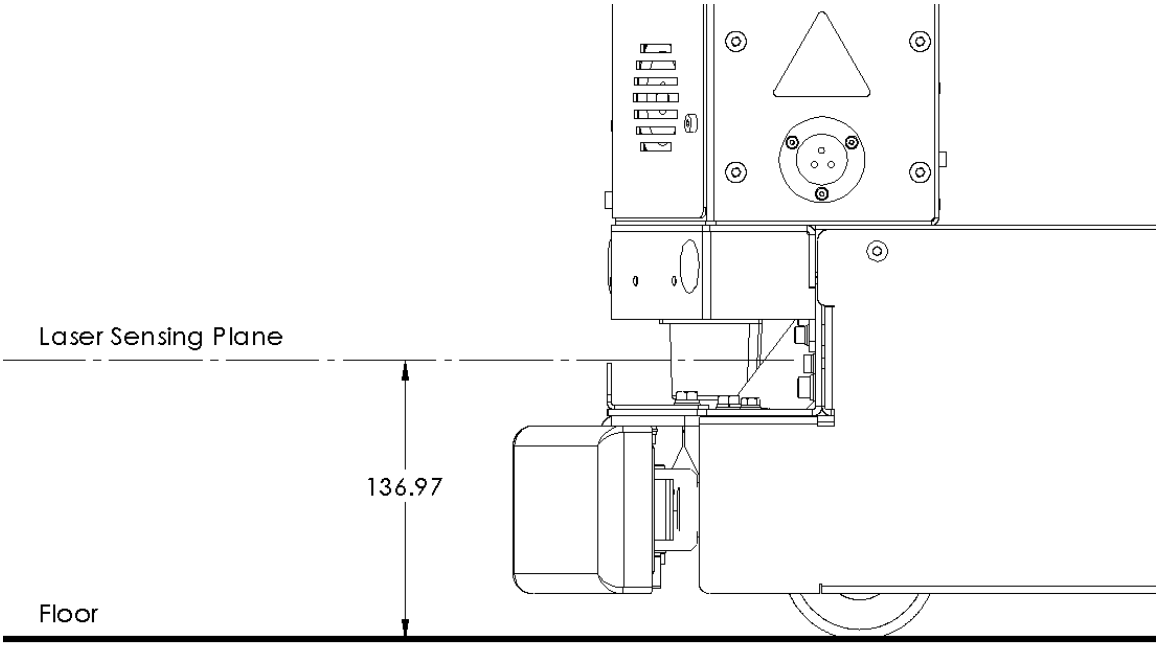

Figure 4-9: Laser Scanning Obstacle Sensor Limitation

The sensing plane of the laser scanning **Obstacle Sensor** of Zalpha AMR is approximately 140mm above ground level. Therefore, Zalpha AMR is unable to detect obstacle that lower than this height using the laser scanning **Obstacle Sensor**. To counter this limitation, Zalpha AMR is equipped with another important safety component **- Bumper**.

Part 4: Hokuyo Obstacle Sensor Laser Scanning Profile

Hokuyo Obstacle Sensor is used to detect obstacle and blockage along the navigation path. If there is any obstacle blocking the way of AMR movement, AMR will be stopped immediately. The sensor is configurable and the sensing profile can be set via the Hokuyo software (Area Designer). Area designer can be downloaded from Hokuyo official website. (https://www.hokuyo-aut.jp/)

Connecting Sensor to PC

Figure 4-10: Open the Cover of the Laser Sensor

1. Remove the cover as shown above
2. Then you can access to the USB port on the sensor (as shown below). Connect your PC to the laser sensor with a USB micro cable
3. Open Area Designer software. The latest software can be downloaded from Hokuyo official website (https://www.hokuyo-aut.jp/)
4. Select the correct port that the sensor is connecting to, then click Connect

Figure 4-12: Access to the USB Por

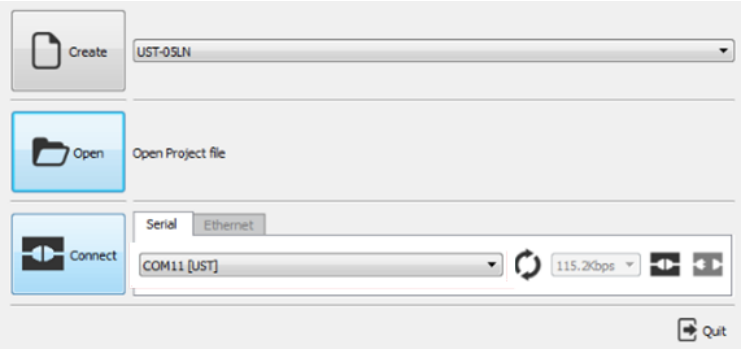

Figure 4-11: Select Correct Port and Click Connect

Profile Program and Upload

Figure 4-13: Click on the icon to access to edit page

1. Click the "Pen" icon to access to the edit page (as shown above)

Figure 4-14: Click on the icon to read the sensor profile from Sensor

2. Then, read the existing profile from the sensor by clicking the "Up Arrow" icon (as shown above)
3. You will be able to get all the existing profile information after the read. (As shown below)

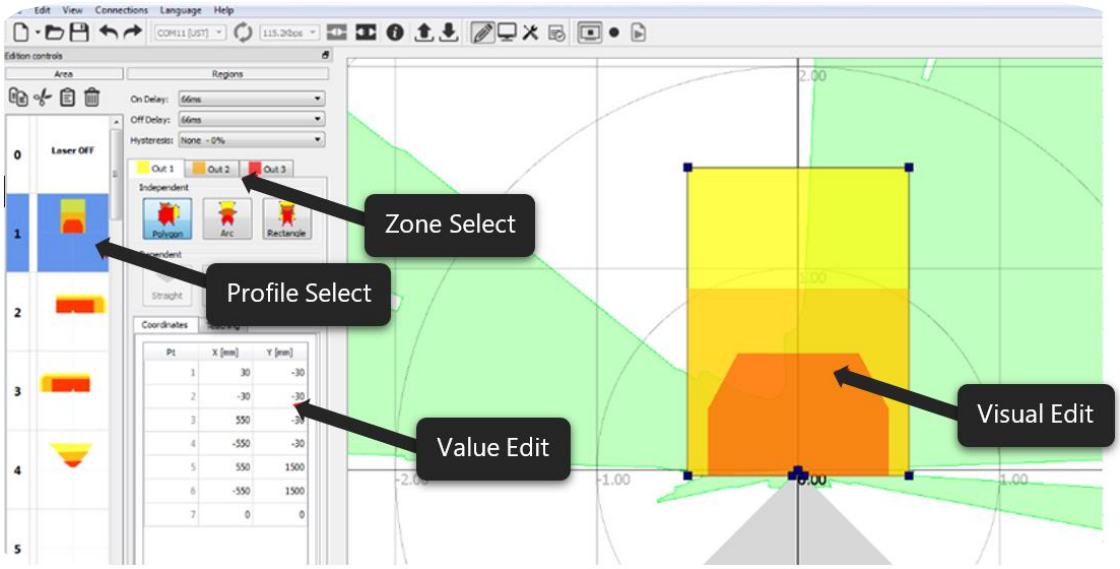

Figure 4-15: Sensor Profile

4. Profile Select:
   - Profile 1: Sensing profile for moving Forward
   - Profile 2: Sensing profile for turning Right
   - Profile 3: Sensing profile for turning Left
5. Zone Select:
   - Out1: The obstruction area where AMR will move with the first slow speed
   - Out2: The obstruction area where AMR will move with the second slow speed
   - Out3: The obstruction area where AMR will STOP.
6. Once selected the profile and zone, then you can edit the sensing zone on either Visual Edit session, or Value Edit session.

7. For better adjustment quality, it's advisable to edit the sensing profile on Value Edit session (As shown below)

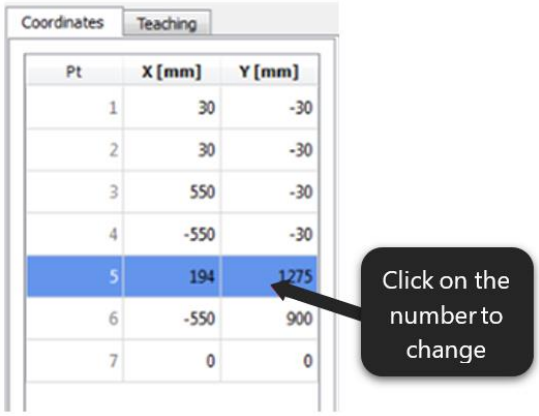

Figure 4-16: Value Edit session for accurate area adjustment

8. Once the edit is done, click "Write to sensor" to program the profile to the sensor (As shown below)

Figure 4-17: Program the Sensor

Backup and Restore

1. Sensor profile can be saved and restore.
2. Click on the "save" icon to save the profile (As shown below). The file will be saved in (.arax) format.

Figure 4-18: Save the Profile (.arax) to Local Drive

3. To restore the profile, just click File > Open, and select the .arax file that you wish to restore. Then just execute "Write to sensor" to program the profile to the sensor

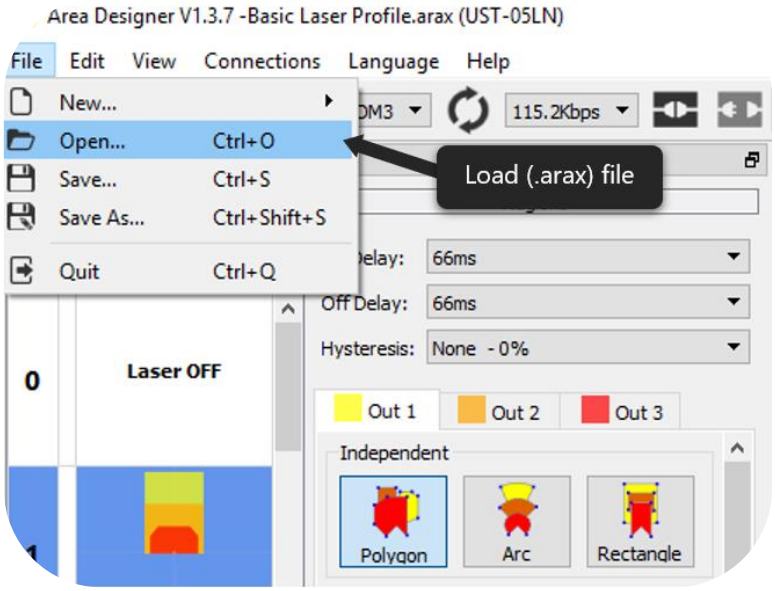

Figure 4-19: Load the Profile (.arax) from Local Drive

Profile Limitation

There are a few limitations in the creation of laser profile that user should take note:

- Max 31 laser profiles can be created
- Max area, radius 6m, 270 degree

Part 5: Front and Rear Bumper

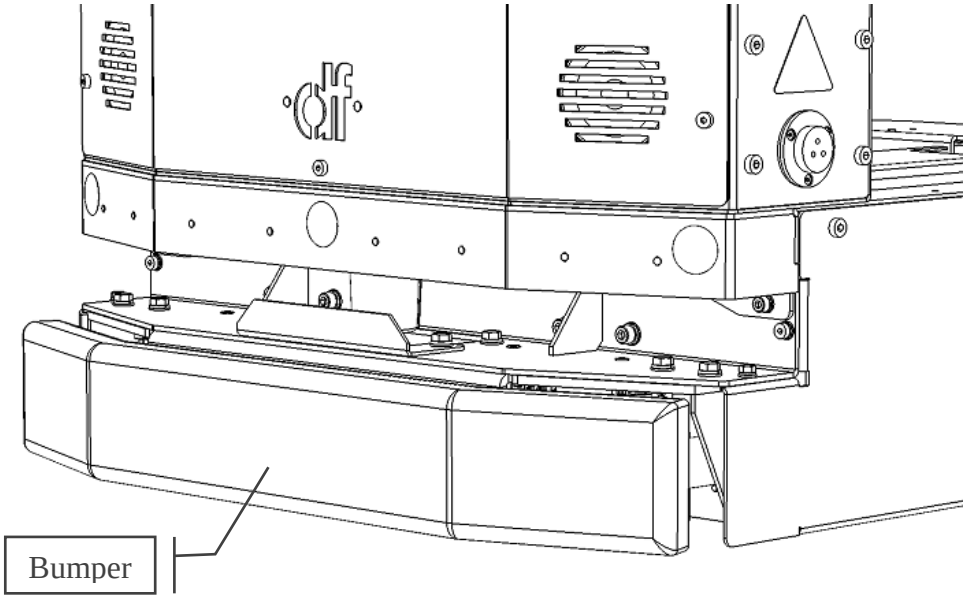

Figure 4-20: Front Bumper on Zalpha

When the **Bumper** of Zalpha contacted with obstacle, Zalpha will stop its movement and the braking mechanism will be engaged immediately. The **Bumper** of Zalpha AMR is made of foam-filled cushion which designed to reduce the impact when contact with obstacle.

Part 6: Emergency Stop Button

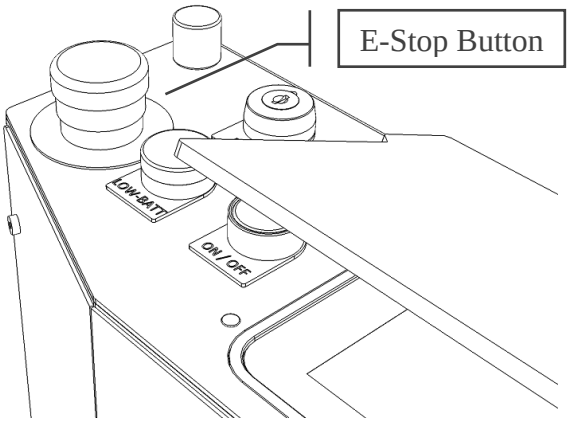

Figure 4-21: Emergency Stop Button

Emergency Stop button is a manual control device. It is a method of initiating the emergency stop function for Zalpha movement.

Upon the activation of this button, the movement of Zalpha will stop immediately.

User confirmation are required to resume the operation after the **Emergency Stop** button is released.

To release it, hold and turn the **Emergency Stop** button to the indicated direction on the Emergency Stop button.

Part 7: External Safety Input

External Safety Input allows user to add additional safety trigger device. This Safety Input port can be access through Expansion IO Panel.

Brake

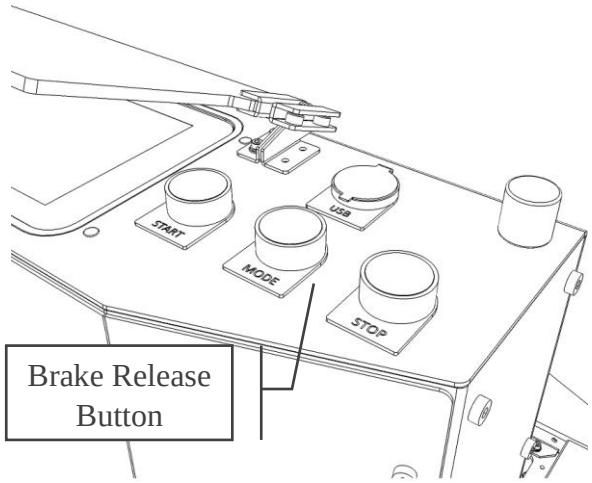

Figure 4-22: Brake Release Button

The brake of Zalpha will always be engaged even after power off.

Brake Release button is a function to allow user to push/move Zalpha freely.

In order to release the brake, it requires user to press and hold on the button.

The functionality of this button is only available under following condition:

- ✓ Upon any **Safety Trigger**
- ✓ Upon activation of **Free Motor** function under **Manual Line Follow app**.

Brake Release Using Manual Line Follow App

1. Select **Apps** tab on **UserPanel**.
2. Select **Manual Line Follow** app from the **Apps** list.

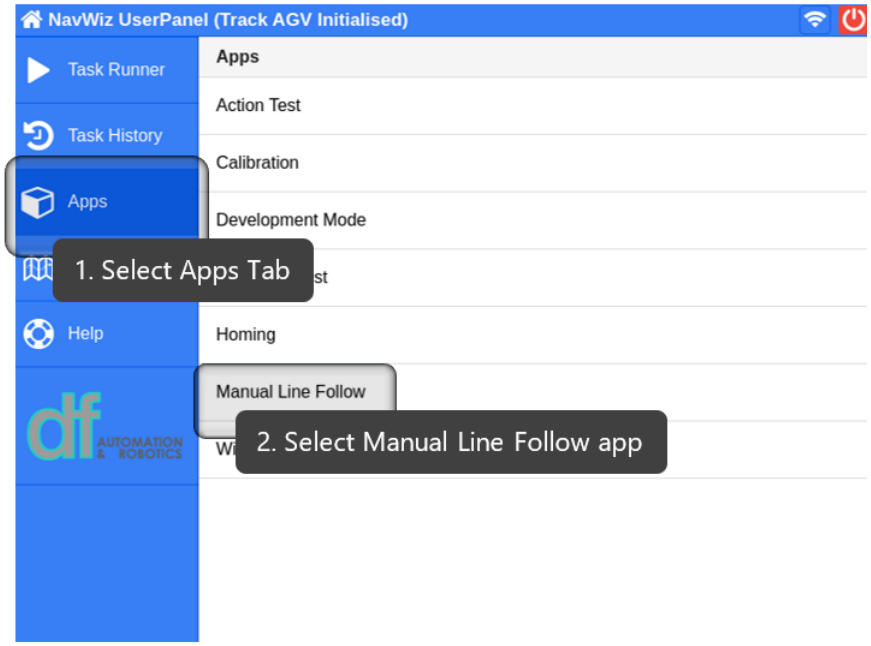

Figure 4-23: Steps to open manual line follow app

3. In **Manual Line Follow** app window, toggle the **Free Motor** option. Push the **Brake Release** button to push Zalpha AMR freely.

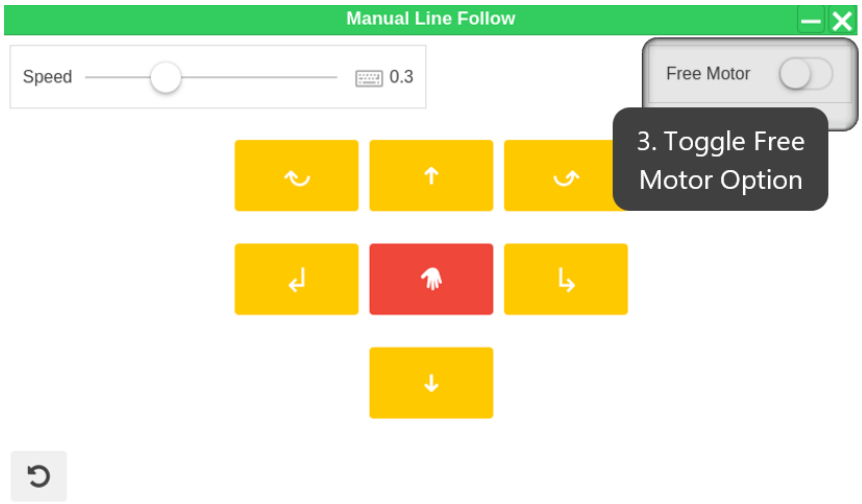

Figure 4-24: Free Motor option Manual Line Follow app

Safety Measure of Manual Charging

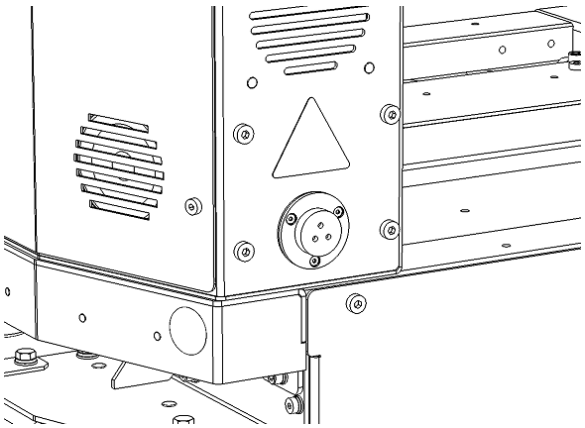

Figure 4-25: Manual Charging Port of Zalpha

Charger Connected Safety Trigger is a safety feature that prevent Zalpha AMR from moving if the **Manual Charging Port** is connected with **Charger**.

On the event that Zalpha AMR is being instructed to operate and the **Manual Charging Port** is connected, a Safety Trigger will be activated and a Safety Triggered message will be shown on the LCD Touchscreen.

Part 8: Safety Trigger Resume Sequences

In case of **Safety Trigger**, please follow the safety resume sequence to resume normal operation:

Front and Rear Obstacle Sensor Safety Trigger

1. Upon sensing of obstacle inside the laser scanning profile, Zalpha AMR will stop its current operation immediately and a **Safety Triggered** with **Obstacle blocked** message as shown in figure below will be shown on the **LCD Touchscreen**

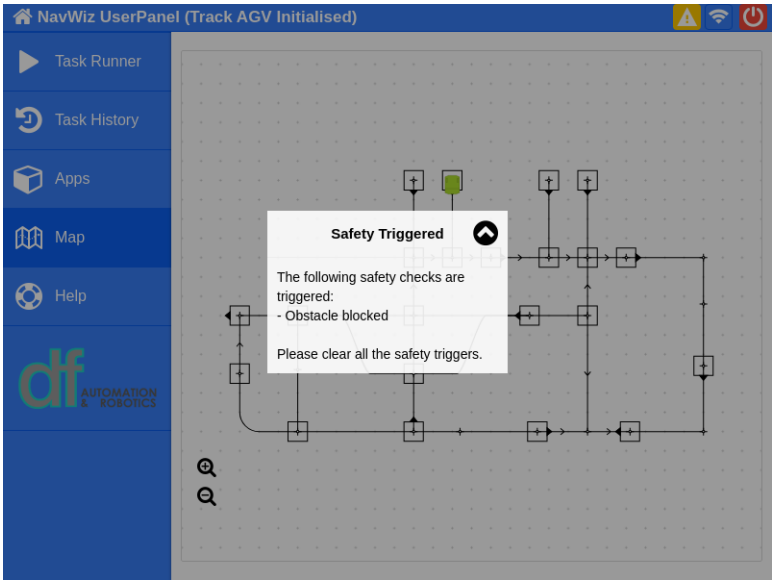

Figure 4-26: Obstacle Blocked Safety Triggered Message

2. Clear any obstacle that blocked the movement of the AMR.
3. A **Resuming** a message will be shown on the **LCD Touchscreen.**
4. AMR will automatically resume its operation after 2 seconds

Front and Rear Bumper Safety Trigger

1. Upon the activation of either Front or Rear **Bumper**, AMR will stop its current operation immediately and a **Safety Triggered** with **Bumper blocked** message will be shown on the **LCD Touchscreen** as shown in figure below.

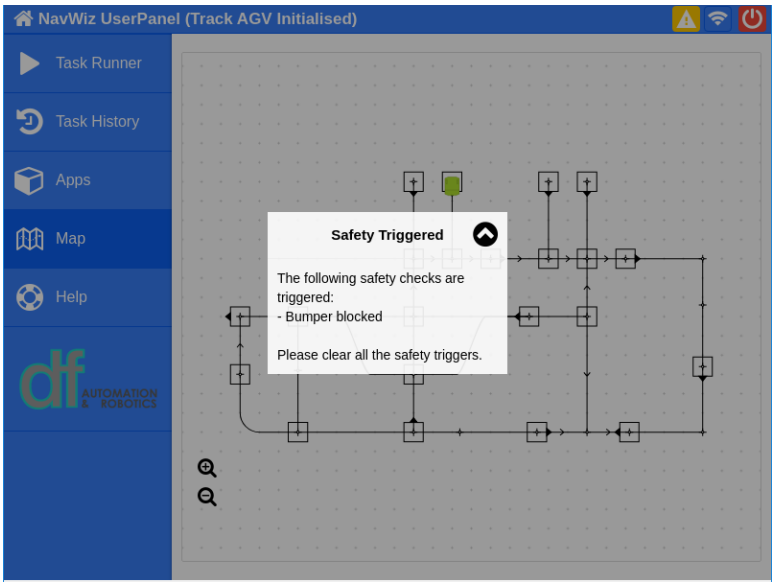

Figure 4-27: Bumper Blocked Safety Triggered Message

2. Clear the obstacle at the Bumper sensor. A **Safety Resume** message as in figure below will be shown

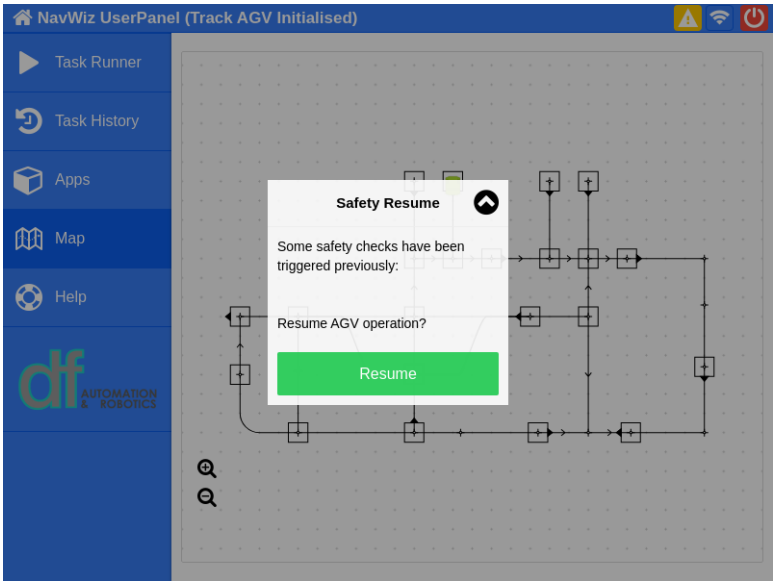

Figure 4-28: Safety Resume Message

3. Press the **Resume** button on display panel or **Start Button** to resume the operation
4. A **Resuming** a message will be shown on the **LCD Touchscreen**
5. AMR will automatically resume its operation after 2 seconds

Emergency Stop Safety Trigger

1. Upon manual activation of the **Emergency Stop** button, Zalpha AMR will stop its current operation immediately and a **Safety Trigger** message with **Emergency button pressed** will be shown on the **LCD Touchscreen**.

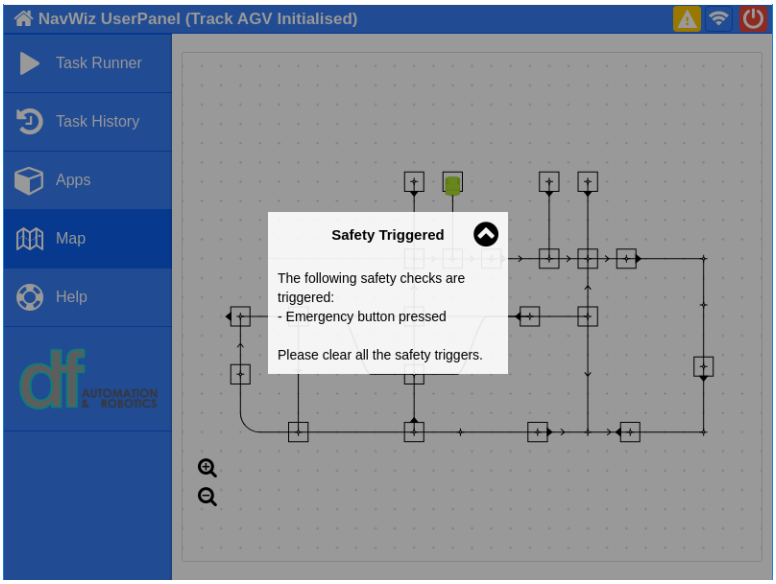

Figure 4-29: Emergency Button Pressed Safety Triggered

2. After making sure that Zalpha AMR is safe to continue its operation, release the **Emergency Stop** button by turning to the indicated direction until a "clicking" sound is heard.
3. After releasing the Emergency Stop button, a **Safety Resume** message as in figure below will be shown

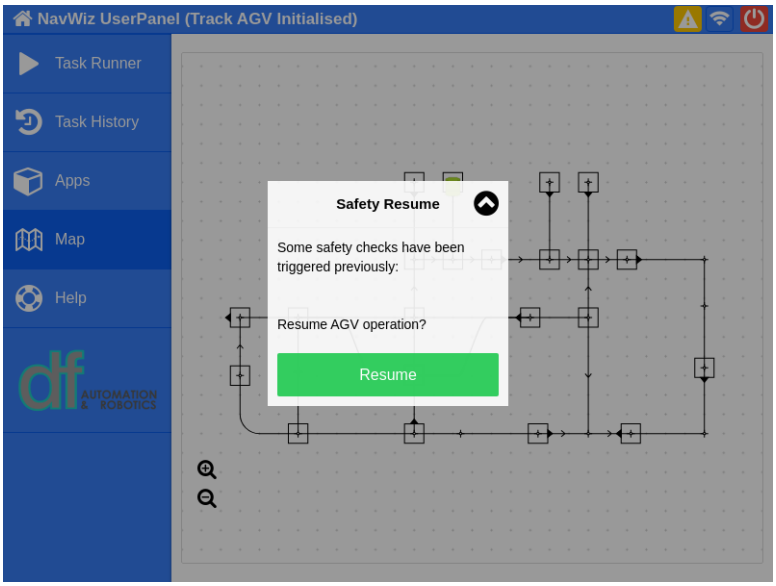

Figure 4-30: Safety Resuming Message

4. Press the **Resume** button on the **LCD Touchscreen** or **Start Button** to resume the operation.
5. A **Resuming** a message will be shown on the **LCD Touchscreen**
6. AMR will automatically resume its operation after 2 seconds

Manual Charging Safety Trigger

1. Upon the start of AMR operation with the manual charging cable connected, the operation will be stop immediately and a **Safety Triggered** popup with **Charger connected** message will be shown on the LCD Touchscreen.

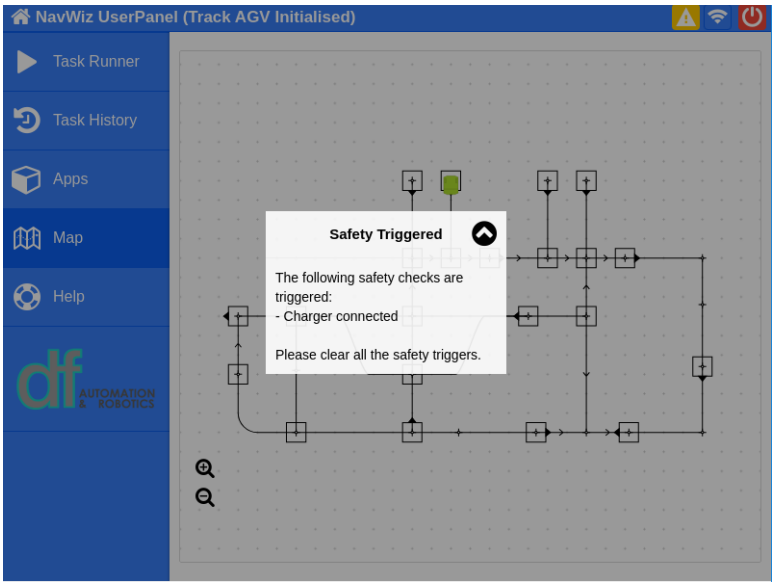

Figure 4-31: Charger Connected Safety Triggered Message

2. Remove the manual charging cable that is connected to the **Manual Charging Port**
3. After disconnecting the manual charging cable, a **Safety Resume** message as in figure below will be shown

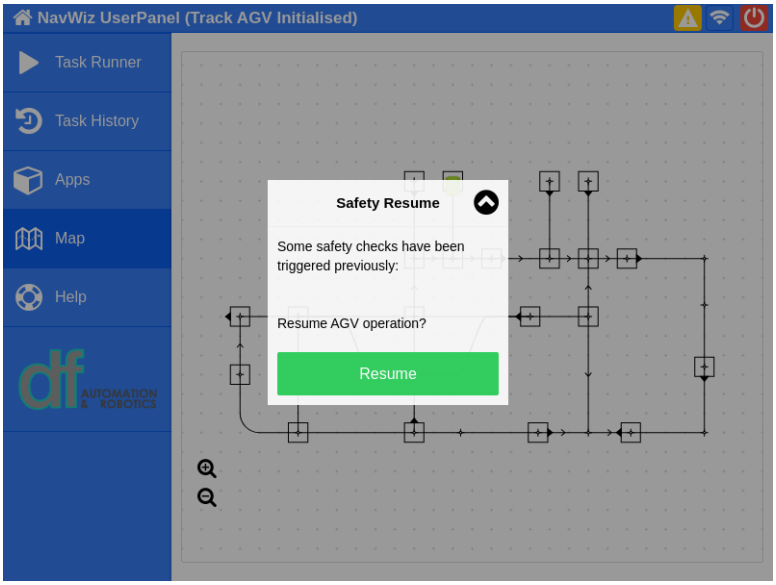

Figure 4-32: Safety Resume Message

4. Press the resume button on the display panel or **Start Button** to resume the operation.
5. A **Resuming** a message will be shown on the **LCD Touchscreen**
6. AMR will automatically resume its operation after 2 seconds

Section 4: LED Indicators

LED Indicators shows different status of Zalpha during operation. Colour change is obvious and clear to provide immediate signal to users.

Table 4-2: LED Indicators of Zalpha

LED Colour		Description
	Red	Safety-triggered: Out-of-line, bumper blocked, external safety trigger, emergency button pressed, charger connected, laser malfunction, line sensor com error, navigation failed, obstacles blocked
	Red blinking	Requesting for resume after safety triggered is cleared
	Yellow blinking	Waiting/Wait acknowledge
	Green	Pause
	Blue	Wait for traffic controller in FMS
	White	Moving
	White Blinking	Moving and approaching obstacles

Section 5: Expansion IO

Zalpha comes with expansion IO port for the expansion of feature on Zalpha (payload handle). Main feature under Expansion IO port.

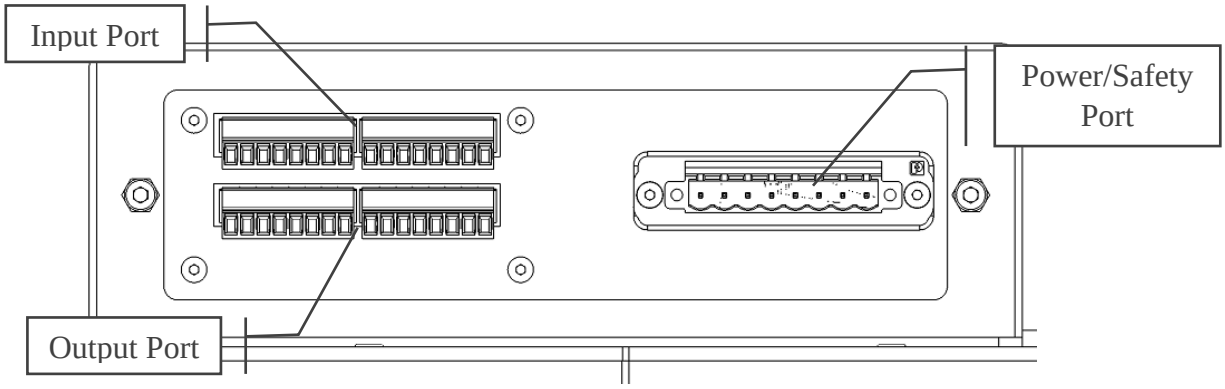

Figure 4-33: Zalpha Standard and Extension Expansion IO

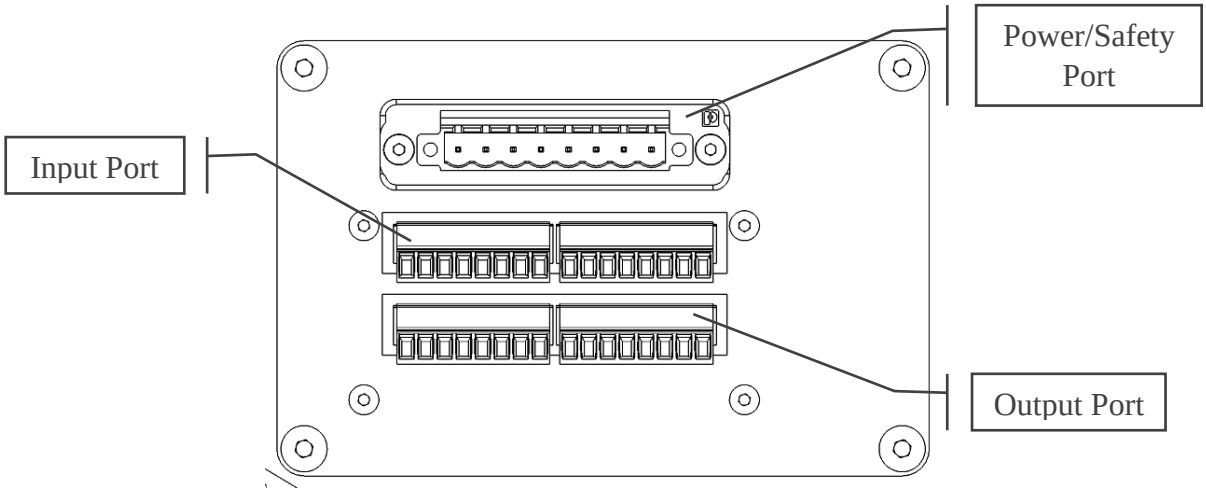

Figure 4-34: Zalpha Lowbed Expansion IO

Recommended replacement connector type for these ports. By default, all the required connected will be provided on the Zalpha.

- Input port and Output Port Connector:
  - ✓ Model: Phoenix Contact BCP-350-8 GN
  - ✓ Pitch: 3.5mm
  - ✓ Number of Contact: 8
  - ✓ Remark: 2x Connector for Input port and 2x Connector for Output port
- Power and Safety Port Connector:
  - ✓ Model: Phoenix Contact BCP-508F-8 GN
  - ✓ Pitch: 5mm
  - ✓ Number of Contact: 8

Part 1: 24V Output

24V output for additional actuator on Zalpha. This 24V output is protected by 10A miniature circuit breaker and this supply will be cut off during any safety trigger on Zalpha (Bumper, Emergency Button, Obstacle sensor or External Safety In).

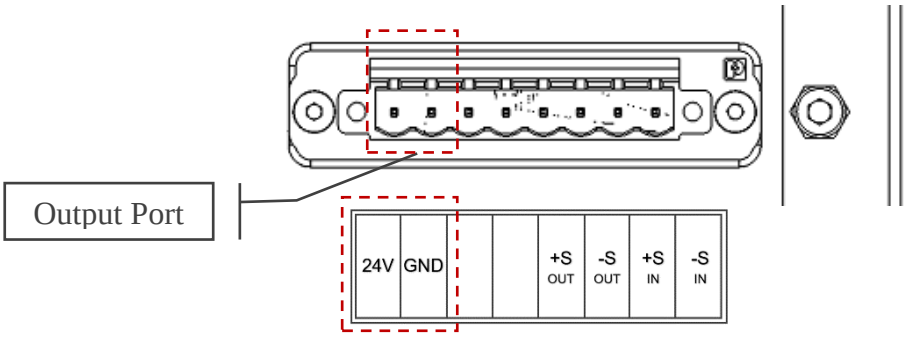

Figure 4-35: Expansion IO 24V Power Port

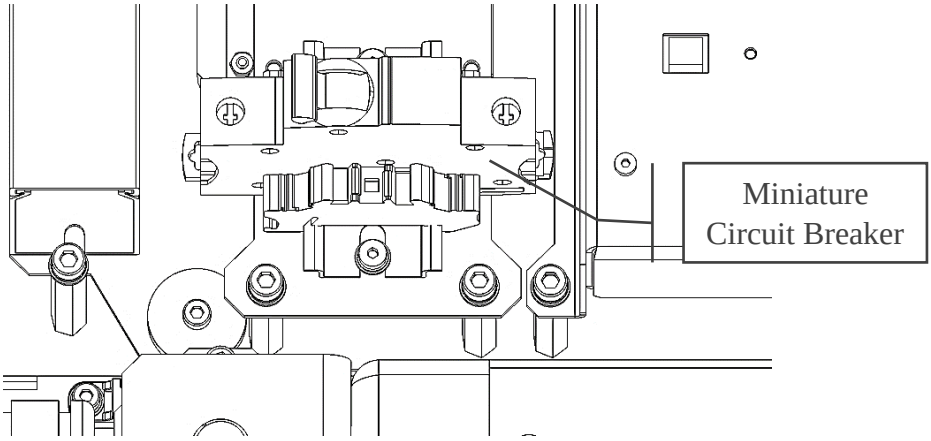

Part 2: Safety Input and Output Port

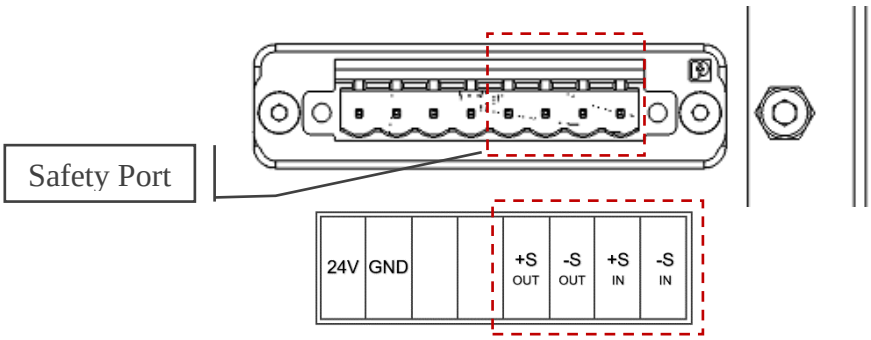

Figure 4-36: Expansion IO Safety Input and Output Port

Safety Input port are additional safety input for the safety system of Zalpha. These +S IN and -S IN pin are NPN input type where they should be shorted for normal condition and opened for safety trigger condition. They can be connected directly to additional Emergency Button. In the case to bypass the usage of Safety Input these Safety Input terminal should be shorted using a short conductor to avoid safety trigger.

Safety Output port are safety state output from Zalpha. During normal operation, these +S OUT and -S OUT pin will supply 24V where they can be connected to a relay to drive any safety signal condition. Do take note that user should keep the current consumption on these pins to be lower than 100mA to avoid overcurrent trigger of the Safety Output.

Part 3: Input Port

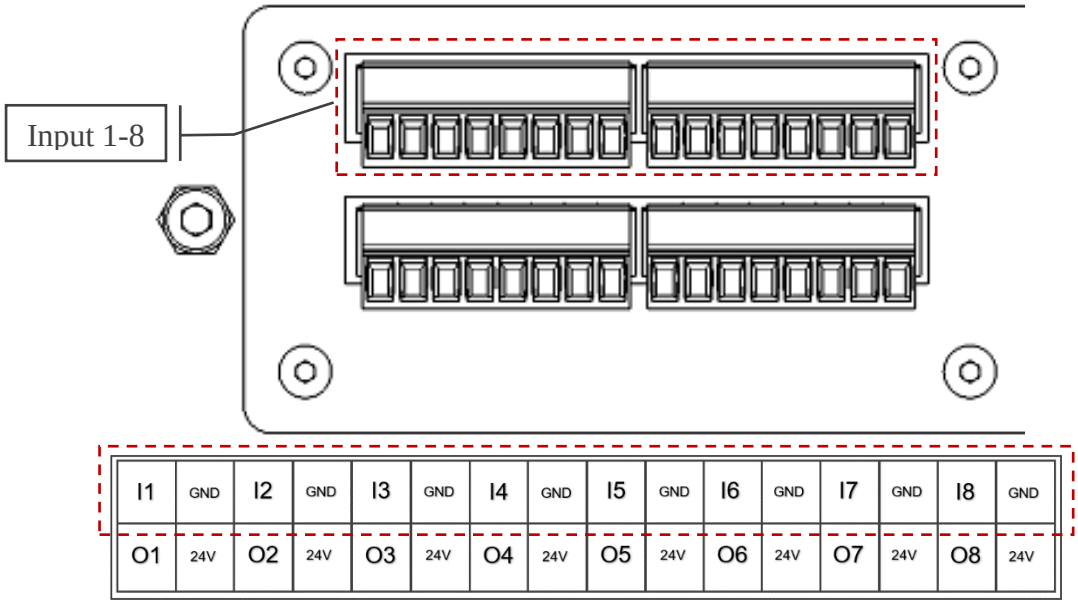

Figure 4-37: Expansion IO Input Port

Descriptions:

- Input type: NPN Input (Sinking)
- Short Input pin to GND to activate the input
- Open Input pin to deactivate the input
- Example1: Input pin can be activated using a push button or limit switch connected to the GND.

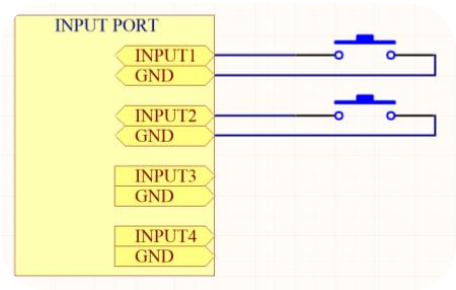

Figure 4-38: Input Port Example 1

- Example2: Input pin can be activated using a sinking NPN transistor controlled by microcontroller.

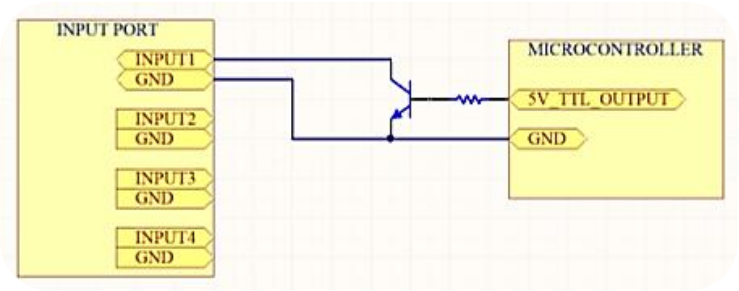

Figure 4-39: Input Port Example 2

- Example3: Input pin can be activated by a relay controlled by PLC.

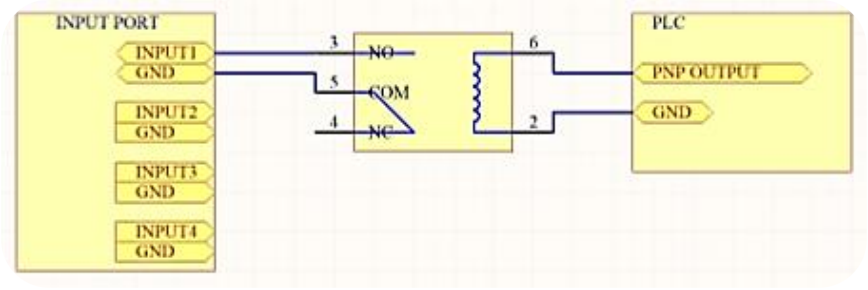

Figure 4-40: Input Port Example 3

Part 4: Output Port

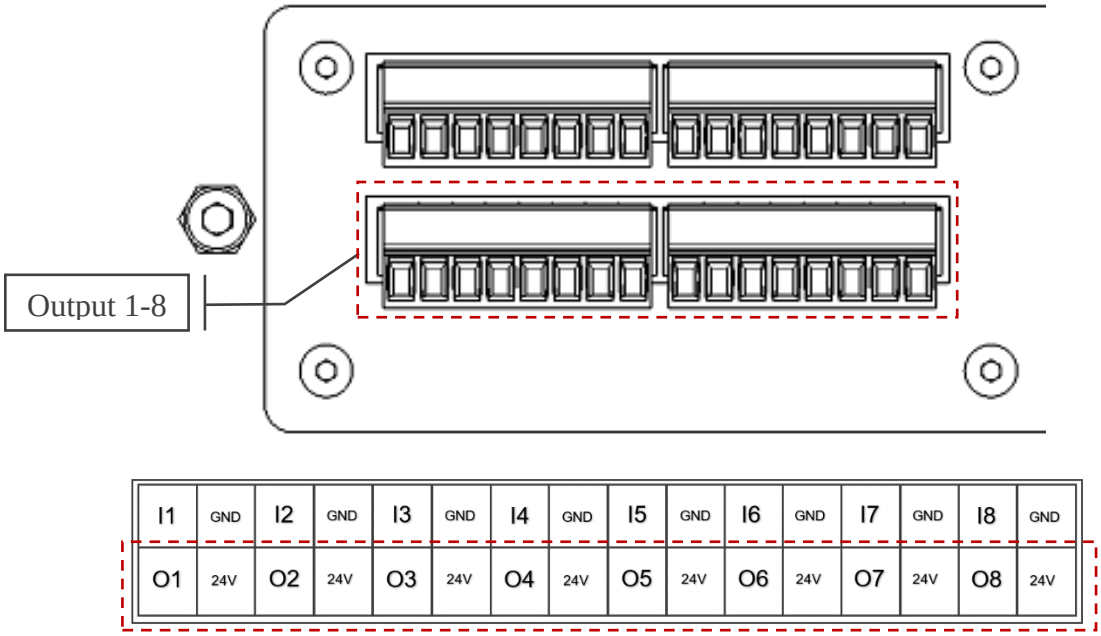

Figure 4-41: Expansion IO Output Port

Output Port:

- Output Type: NPN Output (Sinking), Maximum current 250mA protected by PTC
- 24V Output: Protected by internal fuse (1.5A)
- Example1: Output pin can be used to control small load like 24V LED.

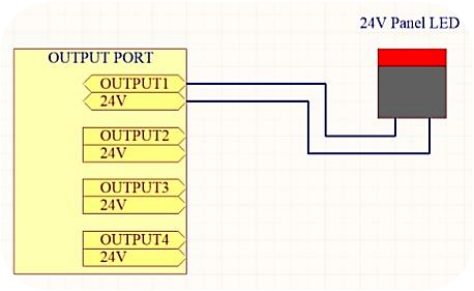

Figure 4-42: Output Port Example 1

- Example2: Output pin can be used to activate relay for higher current application like Motor activation.

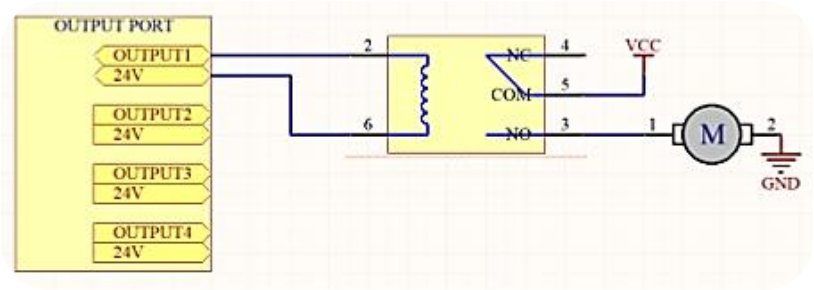

Figure 4-43: Output Port Example 2

Section 6: Main Features of Zalpha

- ✓ **Modular body structure**
  Zalpha is built with modular parts making it easy for servicing and maintenance

- ✓ **Automatic charging system**
  Zalpha can automatically charge itself to ensure 24-hour continuous operation

- ✓ **User-friendly operation system, NavWiz**
  User is able to draw and plan topological map to run Zalpha. At the same time, user can design simple flowchart system to program Zalpha to perform different tasks

- ✓ **Alarm alert when obstacle is detected**

  The robot will stop and the alarm alerts people around when any object blocks the robot or bumper receives impact. The alarm will stop alerting when the obstacle is cleared.

- ✓ **Improved suspension system**

  Suspension system has been improved to provide better grip to the ground and more even form distribution thus enhance the stability of the robot.

- ✓ **Configurable navigation method**
  Available in multiple navigation methods such as magnetic track guided, colour track guided or even trackless laser guided.

5. Troubleshooting

Following are some of the commonly found error that can be encountered from Zalpha AMR. Provided together is the flow and guide to troubleshoot and find the root cause of the problem. Please contact DF Automation & Robotics if you need further technical assistance.

Table 5-1. Troubleshooting Guide

Error/Situation	Remedy
Loosen part of Zalpha (bumper/laser/wheels etc.)	Consult authorized personnel.
Cannot follow line.	• Perform line calibration • Use manual line follow to check line sensor • If magnetic tape damage, change magnetic tape • Consult authorized personnel
Zalpha wouldn't stop when obstacle is in front.	• Perform hardware test and check the detection of laser sensor • Consult authorized personnel
Zalpha wouldn't stop after bumper is hit.	• Perform hardware test and check the condition of bumper switch • Consult authorized personnel
Buttons (Emergency button, start, stop, on/off).	Consult authorized personnel
Zalpha wouldn't move after task initiated	• Check if battery is low • Check if emergency button is pressed
Zalpha is not moving as expected	• Check the map • Check task template • Consult authorized personnel
PC / Laptop cannot access to NavWiz System	• Check and make sure IP address of Zalpha is still the same • Make sure Zalpha is power ON • Check if Zalpha connect to the same WIFI as your PC / laptop
Battery won't charge or won't hold a charge	Consult authorized personnel

6. Services and Maintenances

Please refer to DF Zalpha Service Manual for more information about services and maintenances.

7. Disclaimer

DF Automation & Robotics Sdn. Bhd. continue to improve reliability and performance of its product, and therefore reserves the right to upgrade the product without prior warning. DF Automation & Robotics Sdn. Bhd. takes every care that the contents of this documentation are precise and correct, but takes no responsibility for any errors or missing information. DF Automation & robotics Sdn. Bhd. is not liable for any accidents or mishaps due to the misuse of the product.

8. Certification

- Statement
- LL-C Certificate

Refer next page for attachment.

FCC Statement

This device complies with Part 15 of the FCC Rules. Operation is subject to the following two conditions:

(1)This device may not cause harmful interference.

(2)This device must accept any interference received, including interference that may cause undesired operation.

2. Changes or modifications not expressly approved by the party responsible for compliance could void the user's authority to operate the equipment.

Note:This equipment has been tested and found to comply with the limits for a class B digital device,pursuant to Part 15 of the FCC Rules. These limits are designed to provide reasonable protection against harmful interference in a residential installation.

This equipment generates uses and can radiate radio frequence energy and,if not installed and used in accordance with the instructions,may cause harmful interference to radio communications.However,there is no guarantee that interference will not occur in a particular installation.if this equipmemt does cause harmful interference to radio or television reception,which can be determined by turning the equipment off and on,the user is encouraged to try to correct the interference by one or more of the following measures:

- Reorient or relocate the receiving antenna.
- Increase the separation between the equipment and receiver.
- Connect the equipment into an autlet on a circuit different from that to which the receiver is connected.
- Consult the dealer or an experienced radio/TV technician for help.

This equipment should be installed and operated with a minumum distance of 20 cm between the radiator and your bod

Operations in the 5.15-5.25GHz band are restricted to indoors usage only.

The product integrates a transmitting antenna and does not allow replacement

CERTIFICATE

of conformity

LL-C Certification

No. 8601035

In compliance with requirements for documentation specified in Annex VII, part A and the Essential Health and Safety Requirements in Annex I of the European Parliament and of the Council on machinery, this certificate applies to the machinery device:

Automated guided vehicle
Model(s): Zalpha-MG-S-01, Zalpha-MG-S-03, Zalpha-MG-S-05, Zalpha-MG-E-01, Zalpha-MG-E-03, Zalpha-MG-E-05, Zalpha-MG-L-01, Zalpha-MG-L-03, Zalpha-MG-L-05

Technical specification: **Carry payload: 100kg~500kg; Max. speed:0.67m/s~1m/s; Length:750mm~1030mm**

Technical file: **TCF-VC-CH-20180319**

Assessment Performed: **2006/42/EC**

Category (2006/42/EC - Annex IV): **N/A**

Applied Standards: **EN ISO 12100:2010, EN 60204-1:2006/AC:2010, EN ISO 10218-2:2011, EN 1526:1997+A1:2008**

placed on the market under the name or trade mark of
DF Automation & Robotics Sdn Bhd
No 5,Jalan Impian Emas 18, 81300 Skudai Johor, Malaysia

and produced in the manufacturing plant(s)
DF Automation & Robotics Sdn Bhd
No 5,Jalan Impian Emas 18, 81300 Skudai Johor, Malaysia

This certificate attests that all provisions described in relevant parts of the standard

EN ISO 12100:2010, EN 60204-1:2006/AC:2010, EN ISO 10218-2:2011, EN 1526:1997+A1:2008

have been fulfilled. The CE mark as shown below can be affixed, under the responsibility of the manufacturer, after the completion of EC declaration of conformity and compliance all the relevant directives.

This certificate was first issued on **31st August 2018** and is valid until **30th August 2023** and is based on the evaluation of the technical file of the machinery device. The voluntary certification does not imply an assessment of the production and it does not permit the use of a mark of conformity or of a safety mark of the LL-C (Certification). The holder of this certificate may use this certificate together with his EC declaration of conformity. This is not NB statement. The first certificate date of issue is 31st August 2018.

Prague, 31st August 2018

Daniel Tilcer
Deputy Head of CB

validity code: **B82FDDB8-489**
Check the validity of this certificate using this code at **www.ll-c.info**

www.ll-c.net

LL-C (Certification) Italy S.r.l. | Corso Indipendenza, 5 - 20129 Milano (MI)

9. Change Log

Version	Date	Changes
1.0	30/10/2020	First changelog
1.1	25/11/2020	Update figure with low resolution Change front and back cover page back to color Revise Intended Use section Revise table font to Calibri Remove document version on side bar

DF Automation and Robotics Sdn. Bhd.

Reg No.(1006594V)

5, Jalan Impian Emas 18,
Taman Impian Emas,
81300 Skudai, Johor,
Malaysia

Tel: +607-5623547
Fax: +607-5544269
Email : sales@dfautomation.com
Website : www.dfautomation.com