8.5"

11"

TRADEMARK ATTRIBUTION FOOTNOTE

Whenever the Bluetooth Trademarks are used in a particular piece, they must be attributed with an appropriate trademark footnote. The recommended attribution footnote is as follows: “The Bluetooth® word mark and logos are registered trademarks owned by Bluetooth SIG, Inc. And any use of such marks by INTERNATIONAL DEVELOPMENT COMPANY is under license. Other trademarks and trade names are those of their respective owners.”

NOTE: The Bluetooth® brand elements may not be used in a fashion or manner that could impair or otherwise damage the goodwill associated with the Bluetooth® brand or the Fellow Adopters (International Development Company). The Bluetooth® brand elements shall therefore not be used in connection with products and services that do not enable any Bluetooth® wireless functionality or in connection with unlawful, obscene, pornographic, excessively violent, hazardous,or otherwise poor-taste activities.

, WESTINGHOUSE, are trademarks of Westinghouse Electric Corporation. Used under license by Sky Rich Star Limited. All Rights Reserved.

For assistance with assembly or instruction, parts and customer service, call:
U.S.A. & Canada only: 1-844-551-0680
8am - 5pm Monday - Friday, Central Standard Time Or email: Customerservice@qx-usa.com

www.westinghousesolarlights.com

Westinghouse

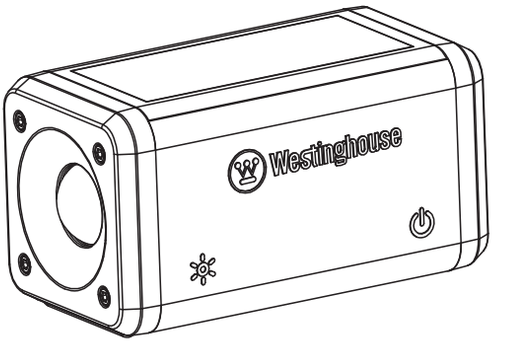

SOLAR LED LIGHT WITH BLUETOOTH® SPEAKER

Bluetooth®

Model: SR80SP01H-08

Instruction Manual

8.5"

PARTS AND SPECIFICATIONS

Bluetooth®

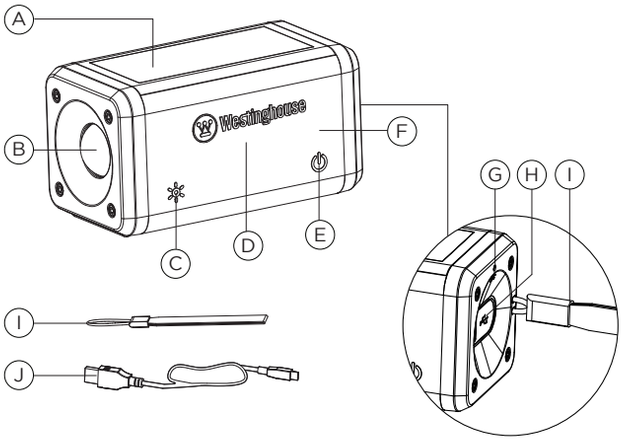

A- Solar Panel
B- Flash Light
C- Flash Light Button
D- 3W Bluetooth® Speaker
E- Power Button
F- LED Indicator
G- Microphone
H- USB Charging Port
I- Lanyard
J- Micro USB Cable

CHARGING INSTRUCTIONS

CHARGING METHOD:

1) USB charging port (H)
Press the power button (E) and hold for 2 seconds to turn light OFF. Use USB cable (J) to connect the external 5V power supply to charge the light. (2 hours minimum needed to fully charge light.)
2) Solar panel (A) charging
Press the power button (E) and hold for 2 seconds to turn light OFF. Place solar panel (A) in direct sunlight and allow to charge 18-20 hours for a full charge.

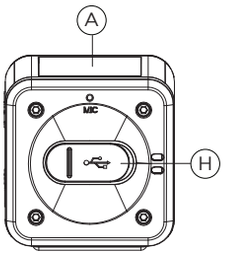

OPERATING INSTRUCTIONS

HOW TO OPERATE FLASH LIGHT :

There are two ways to turn on the flash light:
1. Press light button (C) for 2 seconds to turn on the flash light for high light output (100LM). Press again, a 2nd time, for low light output (50LM), press a 3rd time for strobe light and a 4th time to turn off.
2. Press power button (E) for 2 seconds, then press the flash light button (C) to power on the light.

NOTE: Do not look directly at the light.

HOW TO PAIR WITH A SMART DEVICE:

1. Press power button (E) for 2 seconds to turn on speaker and initiate bluetooth® pairing mode.
2. Activate bluetooth® on your smart device and find device named "**Westinghouse SR80**". Press to pair.
3. Once paired, select audio from your device and play through the solar LED light speaker.
4. Press power button (E) quickly to pause or play music.
5. Press power button (E) two times quickly to disconnect the bluetooth®.
6. Press power button (E) for 2 seconds to turn off speaker.

NOTE: Adjust the volume and select music with your smart device.

HOW TO OPERATE THE MICROPHONE (G):

When the bluetooth® of the smart device connected the light, microphone (G) can be used for hands-free calling. Short press the power button (E) to answer the call and long press the power button (E) for 2 seconds to reject the call.

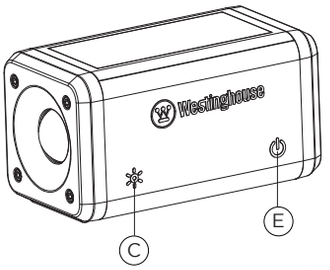

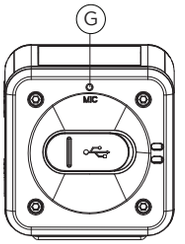

OPERATING INSTRUCTIONS

NOTE: The solar LED light has an automatic reconnection feature. When the solar LED light is connected to the smart device and then restarted, if the previously connected device is in the connection range, the product will automaticlly connect with the previously connected smart device first. In this case, if you want to connect with a (new) smart device, the smart device that is connected to the solar LED light needs to be disconnected first. Double click the power button (E), then the solar LED light can be connected with a (new) smart device.

RUN TIME	
Speaker	6.5 HOURS
Flash light	5 HOURS
Speaker & Flash light	3 HOURS

LOW BATTERY TIPS.

When the light experiences a low battery, it will voice a warning "low battery, please charge". Immediately charge with USB plug provided, or place light outside in direct sunlight. If product is not charged in time, product will shut off. Please keep the speaker in a dry environment when using USB charging.

NOTE: Do not allow an open USB charging port to get exposed to water or any other liquids keep USB charging port closed when not in use.

MULTI-COLOR LED INDICATOR (E) INSTRUCTIONS:

1) **RED LIGHT** indicates solar LED light is charging. USB plug or solar charging.
The red light will remain on until solar LED light is fully charged and turn off.
2) **BLUE LIGHT** indicates Bluetooth status. Turn on the Bluetooth speaker and once in search mode or pairing mode the blue light flashes. After the smart device is connected with the speaker, the blue light will stop flashing. When music is playing, the blue light remains on.

NOTE: Bluetooth® speaker (F) and flash light (B) can operate independently

WARNING:

1. This product is not a toy and contains small parts. Close supervision is necessary when this unit is used near children.
2. To reduce the risk of electrical shock, do not put the unit in water or other liquids. Do not place or store appliance where it can fall or be pulled into a tub or sink.
3. To clean, use a soft dry cloth.

NOTE:

This equipment has been tested and found to comply with the limits for a Class B Digital Device, pursuant to Part 15 of the FCC Rules. These limits are designed to provide reasonable protection against harmful interference in a residential installation. This equipment generates, uses, and can radiate radio frequency energy and, if not installed and used in accordance with the instructions, may cause harmfull interference to radio communications. However, there is no guarantee that interference will not occur during installation. If this equipment does cause harmful interference to radio or television reception, which can be determined by turning the equipment off and on, the user is encouraged to try to correct the interference by one or more of the following measures:
- Reorient or relocate the receiving antenna.
- Increase the distance between the equipment and receiver.
- Connect the equipment to an outlet on a circuit different from that which the receiver is connected.
- Consult the dealer or an experienced radio/TV technician for help.

This equipment complies with Part 15 of the FCC Rules. Operation is subject to the following two conditions:
1) This device may not cause harmful interference.
2) This device must accept any interference received, including interference that may cause undesired operation.

WARNING:

Changes or modifications to this unit not expressly approved by the party responsible for compliance could void the user's authority to operate the equipment.
RF EXPOSURE: This equipment complies with FCC radiation exposure limits set forth for an uncontrolled environment.

NOTE: This product includes a built-in lithium battery and cannot be replaced.
WARNING: Do not dispose of lithium batteries in municipal waste streams or by fire as batteries may explode. Do not open, short circuit, or destroy batteries. Dispose of batteries in accordance with Local, State, and Federal regulations. Do not mix old and new batteries. Do not mix alkaline, standard (carbon-zinc), or rechargeable (nickel cadmium, nickel metal hydride or lithium ion) batteries .

11"

8.5"

11"

PARTES Y ESPECIFICACIONES

Bluetooth®

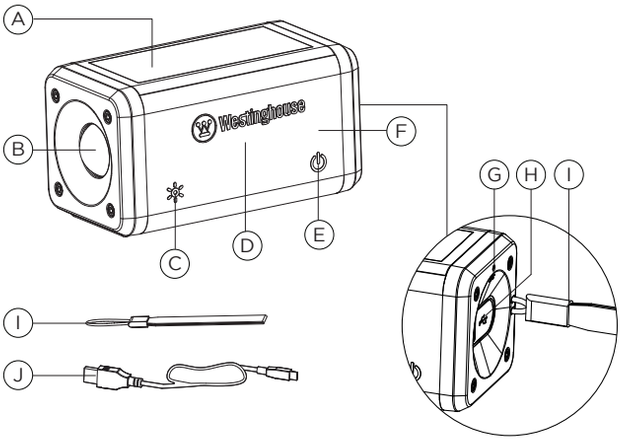

A- Solar Panel
B- Flash Light
C- Flash Light Button
D- 3W Altavoz Bluetooth®
E- Botón de Encendido
F- LED Indicator
G- Microphone
H- USB Puerto de Carga
I- Lanyard
J- Lentes de Luz

INSTRUCCIONES DE CARGA

MÉTODO DE CARGA:

1) Puerto de carga USB (H)
Para apagar la luz, presione el botón de encendido (E) y manténgalo presionado durante 2 segundos.
Emplee un cable USB (J) para conectar la fuente de alimentación externa de 5V para cargar la luz.
(Mínimo 2 horas para cargar la luz completamente)

2) Panel solar (A) de carga:
Presione el botón de encendido (E) y manténgalo presionado durante 2 segundos para apagar la luz.
Coloque el panel solar (A) a la luz solar directa y deje que se cargue de 18 a 20 horas para una carga completo.

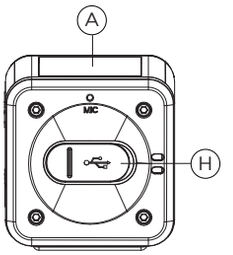

INSTRUCCIONES DE OPERACIÓN

HOW TO OPERATE FLASH LIGHT :

There are two ways to turn on the flash light:

1. Press light button (C) for 2 seconds to turn on the flash light for high light output (100LM). Press again, a 2nd time, for low light output (50LM), press a 3rd time for strobe light and a 4th time to turn off.
2. Press power button (E) for 2 seconds, then press the flash light button (C) to power on the light.

NOTE: Do not look directly at the light.

HOW TO PAIR WITH A SMART DEVICE:

1. Press power button (E) for 2 seconds to turn on speaker and initiate bluetooth pairing mode.
2. Activate bluetooth® on your smart device and find device named "**Westinghouse SR80**". Press to pair.
3. Once paired, select audio from your device and play through the solar LED light speaker.
4. Press power button (E) quickly to pause or play music.
5. Press power button (E) two times quickly to disconnect the bluetooth®.
6. Press power button (E) for 2 seconds to turn off speaker.

NOTE: Adjust the volume and select music with your smart device.

HOW TO OPERATE THE MICROPHONE (G):

When the bluetooth® of the smart device connected the light, microphone (G) can be used for hands-free calling. Short press the power button (E) to answer the call and long press the power button (E) for 2 seconds to reject the call.

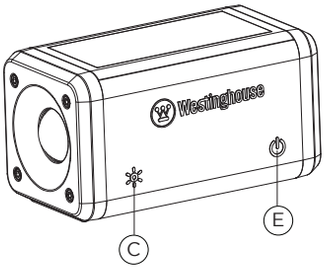

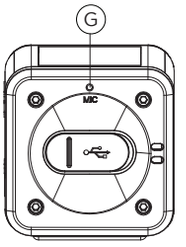

INSTRUCCIONES DE OPERACIÓN

NOTE: The solar LED light has an automatic reconnection feature. When the solar LED light is connected to the smart device and then restarted, if the previously connected device is in the connection range, the product will automaticlly connect with the previously connected smart device first. In this case, if you want to connect with a (new) smart device, the smart device that is connected to the solar LED light needs to be disconnected first. Double click the power button (E), then the solar LED light can be connected with a (new) smart device.

TIEMPO DE FUNCIONAMIENTO	
Speaker	6.5 HORAS
Flash light	5 HORAS
Speaker & Flash light	3 HORAS

LOW BATTERY TIPS.

When the light experiences a low battery, it will voice a warning "low battery, please charge". Immediately charge with USB plug provided, or place light outside in direct sunlight. If product is not charged in time, product will shut off. Please keep the speaker in a dry environment when using USB charging.

NOTE: Do not allow an open USB charging port to get exposed to water or any other liquids keep USB charging port closed when not in use.

MULTI-COLOR LED INDICATOR (E) INSTRUCTIONS:

1) **RED LIGHT** indicates solar LED light is charging. USB plug or solar charging.
The red light will remain on until solar LED light is fully charged and turn off.
2) **BLUE LIGHT** indicates Bluetooth status. Turn on the Bluetooth speaker and once in search mode or pairing mode the blue light flashes. After the smart device is connected with the speaker, the blue light will stop flashing. When music is playing, the blue light remains on.

NOTE: Bluetooth® speaker (F) and flash light (B) can operate independently

ADVERTENCIA:

1. Este producto no es un juguete y contiene piezas pequeñas. Se requiere una supervisión cuidadosa al usar esta unidad cerca de niños.
2. Para reducir el riesgo de descarga eléctrica, no coloque a unidad en agua u otros líquidos. Utilice un paño suave y seco para limpiarla. No coloque ni almacene el aparato en lugares donde se pueda caer o jalar hacia una bañera o lavabo.

NOTA:

Este equipo fue probado y se determinó que cumple con los límites para un dispositivo digital de Clase B, de conformidad con la Parte 15 del Reglamento de la FCC. Estos límites se diseñaron para proporcionar una protección razonable contra la interferencia dañina en instalación residenciales. Este equipo genera, utilza y puede irradiar energía de radiofrecuencia y si no se instala y utiliza apegándose al instructivo, puede causar interferencia dañina en las radiocomunicaciones. Sin embargo, no se garantiza que no ocurra interferencia en unaa instalación en particular. Si este equipo causa interferencia dañina en la recepción de las señales de radio o televisión, lo cual puede determinarse al encender y apagr el equipo, se insta al usuario a tratar de corregir la interferencia por medio de una o más de las siquientes medidas:

- Reorientar o reubicar la antena receptora.
- Aumentar la distancia entre el equipo y el receptor.
- Conectar el equipo en un tomacoriente dentro de un circuito diferente al cual esté conedado el receptor.
- Consultar al distribuidor o a untécnico experimentado en radio/televisión.

Este equipo cumple con la Parte 15 de los reglamentos de la FCC. Su operación está sujeta a las siguientes dos condiciones:
1) Este dispositivo no puede causar interferencia dañina.
2) Este dispositivo debe acaptar cualquier interferencia que recita, incluida la interferencia que pueda causar un funcionamiento indeseable.

ADVERTENCIA:

Los cambios y modificaciones no aprobados expresamente por la parte responsable de su cumplimiento, podrían invalidar la autoridad del usuario para operar el equipo.
RF EXPOSURE: This equipment complies with FCC radiation exposure limits set forth for an uncontrolled environment.

NOTA: Este producto incluye una batería de litio incorporada y no se puede reemplazar.
CUIDADO: No deseche las baterías de litio en la corriente de desechos municipales o por el fuego, ya que las baterías pueden explotar. No abra, provoque cortocircuitos ni mutile las baterías. Deseche las baterías de acuerdo con los reglamentos locales, estatales y federales. No mezcle las baterías viejas con las nuevas. No mezcle las baterías alcalinas, estándar (carbono-zinc) ni recargables (níquel-cadmio, níquel e hidruro metálico o ion litio).

8.5"

11"

NOTA SOBRE ATRIBUCIÓN DE LA MARCA REGISTRADA

Siempre que las marcas registradas de Bluetooth se utilizan en un producto particular, deben contar con la adecuada nota al pie de atribución de la marca registrada. La nota de atribución recomendada es la siguiente: “La marca y los logos de Bluetooth® son marcas registradas propiedad de SIG, Inc. Cualquier uso de esas marcas por parte de INTERNATIONAL DEVELOPMENT COMPANY es bajo licencia. Otras marcas registradas y nombres comerciales pertenecen a sus respectivos propietarios.”

NOTA:
Los componentes de la marca de Bluetooth® no se utilizarán de ninguna forma o manera que pudiera perjudicar o dañar de otra manera la buena fe vinculada a la marca de Bluetooth® o sus miembros asociados (International Development Company). Los componentes de la marca de Bluetooth®, por consiguiente, no se utilizarán en relación con productos o servicios que no habiliten funcionalidad inalámbrica alguna, o en relación con actividades ilegales, obscenas, pornográficas, de excesiva violencia, nocivas o de mal gusto por cualquier otro concepto.

, WESTINGHOUSE, es una marca registrada de Westinghouse Electric Corporation. Usado bajo licencia por Sky Rich Star Limited. Todos los derechos reservados.

Para recibir asistencia con el montaje o las instrucciones, repuestos y servicio al cliente, llame a: (solo EE.UU. y Canadá) 1-844-551-0680
de 8am – 5pm de lunes a viernes, hora estándar central O envíe un correo electrónico a: Customerservice@qx-usa.com

www.westinghousesolarlights.com

Westinghouse

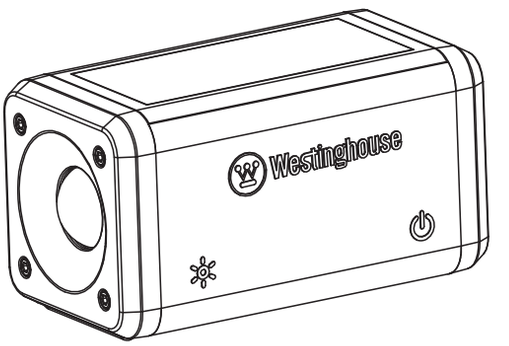

LUZ LED SOLAR CON ALTAVOZ BLUETOOTH®

Bluetooth®

Modelo: SR80SP01H-08

Manual de Instrucciones