User manual

Long Range Wireless HDMI/SDI HD Video Transmission

Wireless Video Transmission System

BZ400

Preface

Thanks for purchasing our Long Range Wireless HDMI/SDI HD Video Transmission Suite. Before using this product, read this user manual carefully please. Follow the instruction to keep your safety and avoid products damage.This user manual might be modified irregularly because of updated products. And the manual is for instruction only; we do not guarantee the information and the suggestions.

■Cautions

1. Do not use this product in the extreme hot, cold, dusty or humid environments.
2. Prevent friction with hard objects.
3. Avoid the product falling down from a high place, or it may damage the hardware.
4. The product is not water proofed. So do not get any liquid into the unit please.
5. Do not dismantle, assemble or alter the product arbitrarily.

■Product model and standard

The Long Range Wireless HDMI/SDI Transmission Suite utilize today's most advanced wireless video transmission technology, which can realize the broadcast-class and uncompressed 3G SDI/HDMI HD video signal transmitted with no compression and zero delay. The suite include one transmitter and one receiver, where the transmitter provides a 3G/HD SDI input and a HDMI input, and the receiver also provide a 3G/HD SDI output and a HDMI output. The wireless HD suite has 2 stick antennas in transmitter side, and 5 internal antennas in receiver side, and it can work at 5.15~5.25GHz and 5.725~5.85GHz frequency band as well as the side panel of both transmitter and receiver has been installed a frequency select knob, which provide maximum 5 workable frequency channels, and support maximum 2 sets of antenna working simultaneously. The wireless suite can accept wide range DC power input, which is suitable for many kinds of camera battery model. The suite also can sustain ±8 kV ESD (HBM, contact discharge), the industry class metal case and professional heat de- sign would guarantee most robust reliability.

■Main features:

HDMI 1.3 spec supports

HDMI and SD/HD/3G SDI input and output

Highest resolution 1080p 60,no delay and no compression

AES-128 encryption with air interface HD video data stream

Support point to point, and point to multi point network topology

work at 5.15~5.25GHz and 5.725~5.85GHz frequency band, maximum 5 frequency channel selected by user knob, coexist with WIFI.

RX built-in antenna, more compact

Maximum transmission distance 120m

Signal indicators for wireless power status, Video status and receiver RSSI

Wide range power voltage input, adapt most kinds of camera battery

Optional Sony F970 battery buckle, convenient for field battery install and replacement

Any input and output ports with ±8 kV ESD protection level (HBM, contact discharge)

Industrial metal case, stable and reliable

■Parameters:

	Transmitter	Receiver
Interface	SDI Input（ BNC Female ） HDMI ; Input (Type A female) ; 2 Antenna port(RP-SMA female）gain 2.5dBi ;DC	SDI Output（ BNC Female ） HDMI ; Output (Type A female); DC input
Supply voltage range	7-36V DC	7-36V DC
Power consumption	< 6.5 W	< 7.5 W
Size	(L x W x H): 115x 67 x 23mm don't include antennas	(L x W x H): 152x 95 x 23mm
Mass Weight	270g	355g
Input Video Format	HDMI:525i, 625i, 720p 50/59.94/60, 1080i 50/59.94/60, 1080p23.98/24/25/29.9/30/50/59.94/60;HDMI Type A SDI:3G, HD, and SD-SDI (auto-selected), SMPTE-259/274/292/296/372/424/425;1x BNC	/
Output Video Format	/	HDMI:525i, 625i, 720p 50/59.94/60, 1080i 50/59.94/60,1080p23.98/24/25/29.9/30/50/59.94/60;HDMI Type A SDI:3G, HD, and SD-SDI (auto-selected), SMPTE-259/274/292/296/372/424/425; 1x BNC
Input Audio Format	SDI embedded 2 channel 24 bit/48KHz	/
Output Audio	/	SDI embedded 2 channel 24 bit/48KHz
Signal Indicator	POWER-Green; VIDEO-Yellow	POWER-Green; Wireless RSSI-Blue (4 LEDs); POWER/VIDEO-Yellow
Frequency Band	5.15~5.25GHz 5.725~5.85GHz	5.15~5.25GHz 5.725~5.85GHz
Modulation Mode	OFDM	OFDM
Transmission Power	Maximum 20dBm	/
Receiver Sensitivity	/	-75dBm
Occupied Bandwidth	40MHz	40MHz
Temperature Range	0~40°C(operating condition); -20~60°C(Storage)	0 ~ 40°C (operating condition); -20~60°C(Storage)
Compliance	FCC; CE.	FCC; CE.

■Parameters:

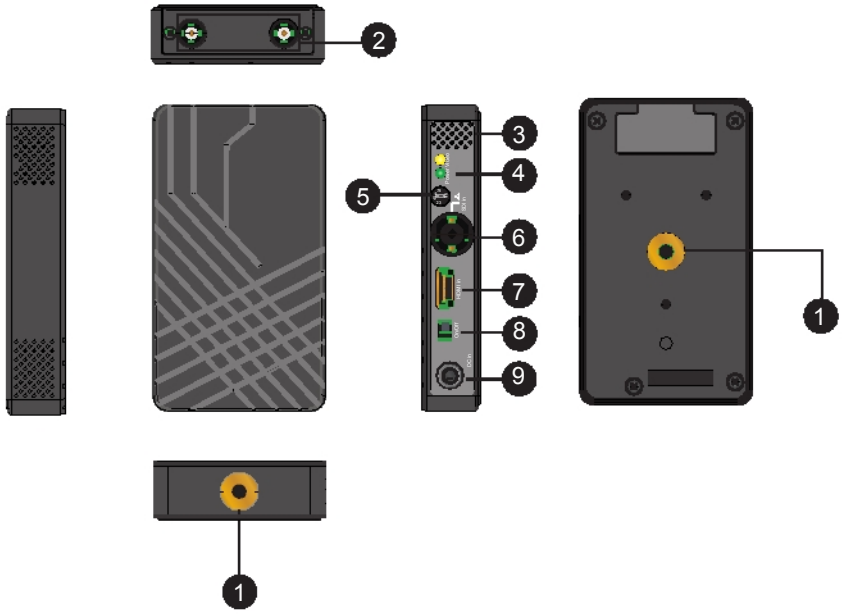

Transmitter

1) 1/4-20 Screw Hole
2) RP-SMA female antenna connector
3) Video input indicator, 1 yellow LED
4) Power on Indicator, 1 green LED
5) Frequency selection knob,0-9
6) SD/HD/3G SDI input
7) HDMI Input
8) DC power switch
9) DC input, LEMO 4-pin B series connector

■Parameters:

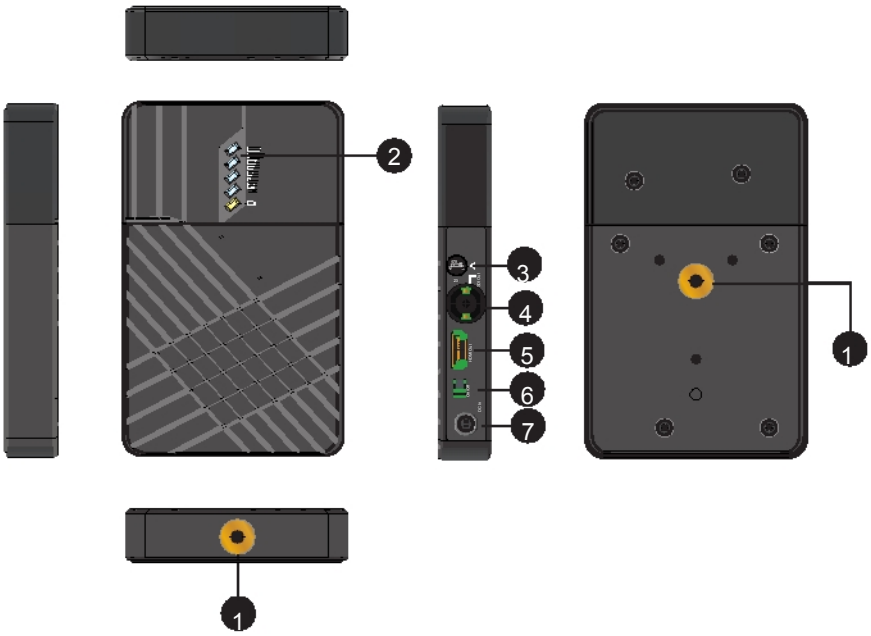

Receiver

1) 1/4-20 Screw Hole
2) LED status indication(4 blue LED for RSSI &1 LED yellow for POWER/VIDEO)
3) Frequency selection knob,0-9
4) SD/HD/3G SDI output
5) HDMI output
6) DC power switch
7) DC input, LEMO 4-pin B series connector

■Packing list:

1 unit transmitter

1 unit receiver

SONY NP-F970/PananonicD28s/Canon 5D2 batter buckle (Optional)

2 pcs 5GHZ omni-directional_and_high_efficiency antennas

(RP-SMA male)

1 user manual

310*190*93mm carton packing

■Installation details and cautions

Transmitter side

a) Install 2 Omni-directional and high efficiency antennas to transmitter's RP-SMA female antenna connectors.

b) There is one1/4-20 screw in transmitter metal case, which are located on the bottom of case. So the user can utilize a 1/4 screw to ISO518 hot-shoe converter fix the transmitter into camera.

c) Install battery into battery buckle if your product model includes battery buckle options; please note the battery model must match the battery buckle type.

d) The user can also utilize a subsidiary LEMO 4 pin-male to D-type receptacle power cable to get power input from an outside power source.

e) All TX installation guidelines see below figure.

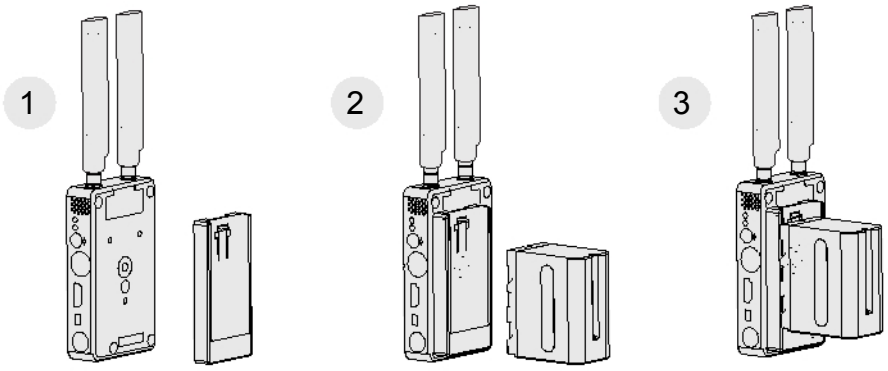

Receiver side

a) There is one 1/4-20 screw nut in the bottom side of receiver. The user can utilize a 7" articulating arm and crab clam to install the receiver on one tripod.

b) Install battery into battery buckle if your product model includes the option of battery buckles; please note the battery model must match the battery buckle type.

c) The user can also utilize a subsidiary LEMO 4 pin-male to D-type receptacle power cable to get power input from an outside power source. d)

All RX installation guidelines see below figure.

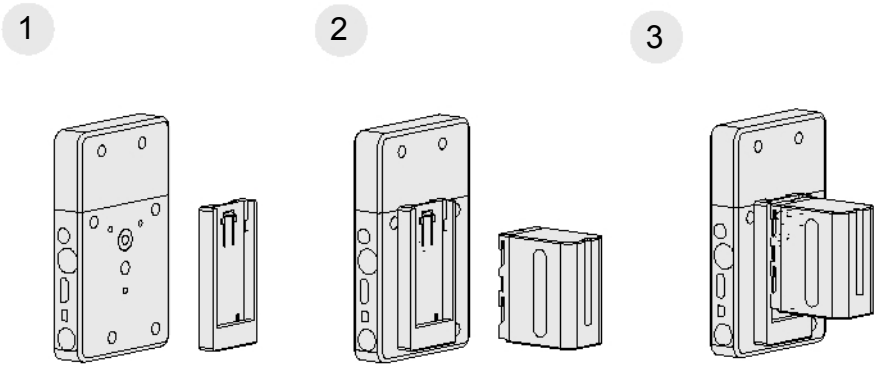

Typical connection instruction

Connect camera SDI or HDMI output to transmitter SDI or HDMI input port, and the transmitter can fixed in hot-shoe port of the camera. Connect HDMI or SDI output port of the receiver to SDI or HDMI input port of the HD monitor. Make sure all antennas and batteries are equipped normally. See below diagram.

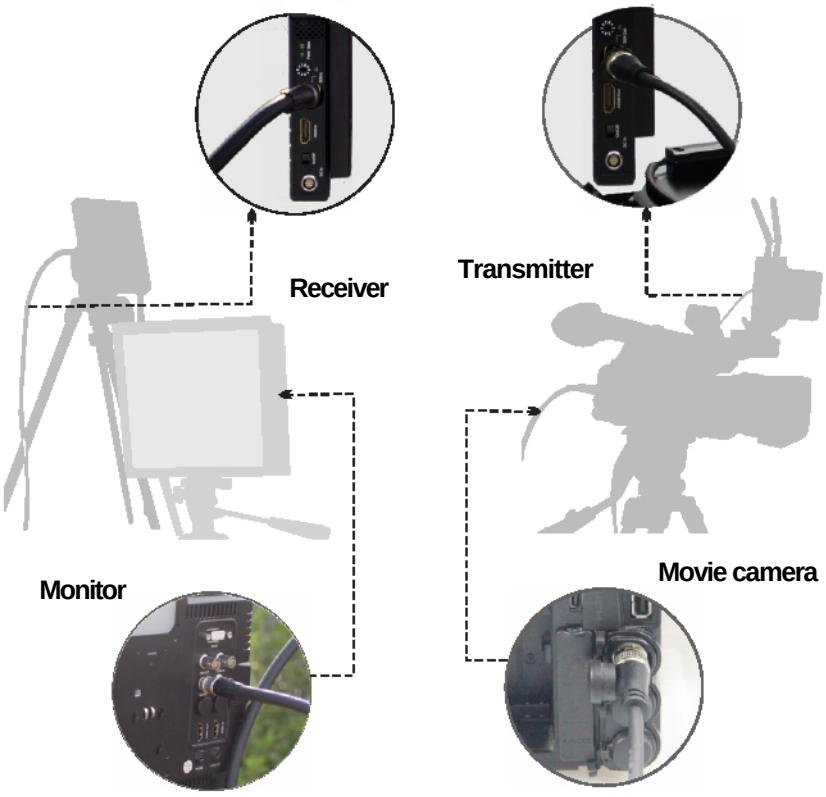

Getting started

After finishing all steps above, system is workable, follow below steps.

a) Ensure the video source output of the camera is OK, and the HD monitor is power on and switched to connected video input port.

b) Ensure all input, output SDI or HDMI cables are connected.

c) Ensure 2 TX antennas are installed, and it is better to keep TX 2 antennas with orthogonal angle each other for best RF performance. Like below figure.

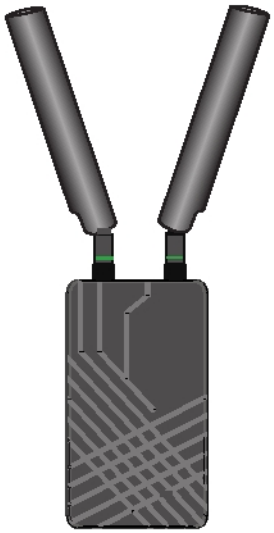

Transmitter

d) Ensure both the transmitter and receiver installed the battery or DC input port connected to outside power source. Then turn power switch of transmitter and receiver to 'ON' respectively, then 'Power' indicator will light.

e) Ensure the frequency knobs of transmitter and receiver are set with the same number, and this will make sure the transmitter and receiver work with same RF frequency.

f) If the camera is on and video input is OK, TX side 'video' indicator will light.

g) Before RX finished wireless link with TX, 4 'RSSI' indicators and 'Video' indicators are off; when wireless link is OK, 'RSSI' indicators will light first, and 'RSSI' will indicate the received RF signal strength. If the receiver d- etects wireless video normal internally from air interface, 'Video' indicator will light. Before that, if SDI or HDMI video out port of the receiver has HD monitor connected, it will display an OSD of 'Link Connecting……' like below picture.

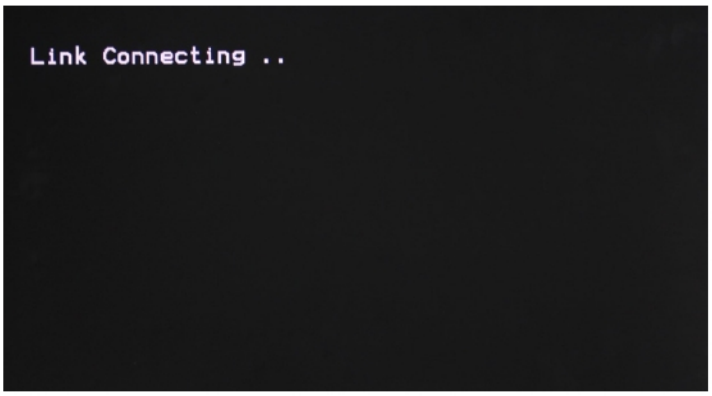

h)The system will spend 20-30 seconds on constructing the link, and real link period will depend on the current wireless channel condition. When wireless link is set up, "RSSI" light will light and indicate current received wireless si- gnal strength, as well "Video" indicators will light, and then connected HD monitor will display the video and audio accordingly.

■Input video port selection of transmitter

The transmitter has a 3G SDI video input port and a HDMI video input port, and the system will detect valid video source automatically of SDI and HDMI port, and then switch it as main video input channel. If both SDI and HDMI h-ave valid video input, the system will take SDI input as priority.

■RSSI indicators

The receiver will calculate received RF signal strength internally and 5 "RSSI" LEDs will be used to indicate wireless signal power and quality. The user can observe the RSSI LED status to know if the current wireless link is reliable or not. From 1 to 5 lit LEDs show RSSI from Min to Max.

Lit RSSI LEDs volume	Wireless Link quality	Video Quality
4	Strong	Best
2-3	Middle	Good
1 or no lit LED	Weak	Visible Video Noise

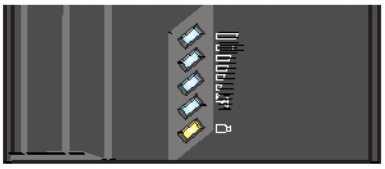

■Frequency selection and configuration

The wireless suite can work at 5.15~5.25GHz and 5.725~5.85GHz frequency band, as well as the side panel of both transmitter and receiver has been installed a frequency select knob, which provide maximum 5 workable frequency channels, and support maximum 2 sets of antenna working simultaneously. See below frequency knob figure.

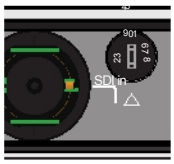

■Storage conditions

Products storage temperature should be -20°C~60°C. For long time storage requirement, please use original carbon boxes, and avoid from high humid, acid base or dusty place.

■Maintenance

Warning

To ensure your safety, place choose original adapters. And provide stable AC input according to this manual.

■Normal problems

a)No output on display

Check TX and RX power first, and see if TX or RX battery is existed, then check if TX antenna and RX antenna installed right. After that, check 'Video' indicator, if TX 'Video' indicator is not light, then check SDI or HDMI cable is plugged in and video source is ready please. Finally may check input video format is compatible with this product specs.

b)Poor output video quality

Check if SDI or HDMI input or output cable is plugged well, then check how many receiver side 'RSSI' LEDs is lit, there should be 2-3 RSSI LED lit if the user want to get better video quality; if there is only 1 RSSI LED or no LED lit, that means the received wireless signal is weak, and should decrease the transmission distance or try to change to other frequency channels in case some exist interference.

Federal Communications Commission (FCC) Statement

This device complies with part 15 of the FCC Rules. Operation is subject to the following two conditions: (1) This device may not cause harmful interference, and (2) this device must accept any interference received, including interference that may cause undesired operation.

Note: This equipment has been tested and found to comply with the limits for a Class B digital device, pursuant to part 15 of the FCC Rules. These limits are designed to provide reasonable protection against harmful interference in a residential installation. This equipment generates, uses and can radiate radio frequency energy and, if not installed and used in accordance with the instructions, may cause harmful interference to radio communications. However, there is no guarantee that interference will not occur in a particular installation. If this equipment does cause harmful interference to radio or television reception, which can be determined by turning the equipment off and on, the user is encouraged to try to correct the interference by one or more of the following measures:

- Reorient or relocate the receiving antenna.
- Increase the separation between the equipment and receiver.
- Connect the equipment into an outlet on a circuit different from that to which the receiver is connected.
- Consult the dealer or an experienced radio/TV technician for help.

Warning: Changes or modifications made to this device not expressly approved by **Ikan International LLC** may void the FCC authorization to operate this device.

Note: The manufacturer is not responsible for any radio or TV interference caused by unauthorized modifications to this equipment. Such modifications could void the user's authority to operate the equipment.

This equipment complies with FCC radiation exposure limits set forth for an uncontrolled environment. This equipment should be installed and operated with minimum distance 20cm between the radiator and your body.
This transmitter must not be co-located or operating in conjunction with any other antenna or transmitter.

Note: In cases of absence of information to transmit or operational failure, the device will automatically discontinue transmission via mechanism of software detection.