thermoscientific

Thermo Scientific Revos

Operator Guide

A84110100 Issue 1 • July 2018

thermo scientific

Company Information

© Copyright 2018. Thermo Fisher Scientific. All rights reserved. Thermo Fisher Scientific Inc. (Thermo Fisher Scientific) is the world leader in serving science, offering a unique combination of innovative technologies. Thermo Scientific is a brand name of Thermo Fisher Scientific.

All other trademarks are the property of Thermo Fisher Scientific and its subsidiaries.

Thermo Fisher Scientific makes every attempt to ensure that the information contained in this supporting document is correct and clearly stated, but does not accept responsibility for any errors or omissions. The development of Thermo Scientific products and services is an ongoing process. Please ensure that any published information you use as a reference is up to date and relates to the condition of the product. If necessary, check with your local Thermo Fisher Scientific representative.

This document may not, in whole or in part, be copied, photocopied, reproduced, translated, or converted to any electronic or other form without prior written consent of Thermo Fisher Scientific. All information contained in this manual is proprietary and confidential, and the exclusive property of Thermo Fisher Scientific and is protected by copyright.

Contact address

Thermo Shandon Limited (Trading as Thermo Fisher Scientific),
Tudor Road, Manor Park,
Runcorn, WA7 1TA, UK

Telephone +44 (0) 1928 534 000
Fax +44 (0) 1928 534 001
Web: www.thermoscientific.com/pathology

USA Distributor

Richard-Allan Scientific
Co. Subsidiary of Thermo Fisher Scientific
4481 Campus Drive
Kalamazoo, MI 49008, USA

Telephone 1-800-522-7270
Fax +1 269-372-2674
Web: www.thermoscientific.com/pathology

These instruments conform to the essential requirements of:

- In Vitro Diagnostic Directive 98/79/EC

Symbols

The following symbols and conventions may be used throughout this document and on the instrument:

This symbol is used on the equipment, or in a document, to indicate that instructions must be followed for safe and correct operation. If this symbol appears on the instrument always refer to the operator guide.

This symbol is utilised on the instrument, or in a document, to indicate that irritants or potentially harmful chemicals are present. Refer to the Material Safety Data Sheets for the products, and always use Good Laboratory Practice.

This symbol indicates that a surface is hot. If this symbol appears on the instrument or in the documentation always refer to the operator guide. Take suitable precautions.

This symbol is utilised on the instrument, or in a document, to indicate that there are potential biological risks associated with the instrument and / or with instrument use. Always use Good Laboratory Practice.

Manufacturer

This symbol is utilised on the instrument, or in a document, to indicate that there are potential flammable risks associated with the instrument and / or with instrument use. Always use Good Laboratory Practice.

A warning is given in the documentation if there is a potential risk of injury, equipment failure or poor tissue sample processing outcome.

Note

Notes give additional information about a job or instruction, but do not form part of the instruction.

Table of Contents

COMPANY INFORMATION **3**

SYMBOLS 3

CONTACT ADDRESS **3**

..... **3**

USA DISTRIBUTOR 3

TABLE OF CONTENTS **5**

EMC STATEMENT 10

SAFETY INFORMATION **11**

INTRODUCTION 11
GENERAL SAFETY 11
DISPOSAL OF SEALED LEAD ACID BATTERIES 12
CHEMICAL SAFETY 12
ENVIRONMENT 13
WARRANTY STATEMENT 13

HOW TO USE THIS GUIDE **5**

INTRODUCTION 5
CHAPTER SUMMARY 5
Chapter 1 - Introduction to Revos *5*
Chapter 2 - Installation and Setup *5*
Chapter 3 - Basic Operation *5*
Chapter 4 - Advanced Operation *5*
Chapter 5 - Cleaning and Maintenance *5*
Chapter 6 - Troubleshooting *5*

CHAPTER 1 – INTRODUCING REVOS **6**

INTRODUCTION TO REVOS 7
IVD Intended Use *7*
Tissue Cassettes *7*
Battery Backup *7*
Approved Reagents *8*
IDENTIFICATION OF PARTS 9
SYSTEM SPECIFICATIONS 10
Mechanical Specifications *10*
Electrical Specifications *10*
Interface Connections *10*
Fuses *10*
Environmental Specifications *11*
THE REVOS INTERFACE 12
Using the Touchscreen *12*
Menus, Options and Buttons *13*
On-screen Help *13*
The Main Screen and Information Bar *14*

CHAPTER 2 - INSTALLATION AND SETUP **17**

UNPACKING AND MOVING THE INSTRUMENT 18
Unpacking *18*
Moving the Instrument *18*
INSTRUMENT POSITIONING AND SETUP 19
Centre of Gravity Positions *19*
Levelling the Instrument *20*
FITTING THE FILTERS 21
Fitting Extraction Filters *21*
Fitting the Downdraft Filter *22*
Optional Vent Adaptors *22*
CONNECTIONS 23
Connecting to Mains Power *23*
Connecting a Remote Alarm *24*
Connecting an Autodialer *25*
Connecting to a Laboratory Information Management System (LIMS) *26*
INITIAL SETUP 27
Instrument Start-up Procedure *27*
Setting the System Time and Date *30*
CONFIGURING REAGENTS 32
Defining Reagent Names *32*
Setting Reagent Storage Temperatures *34*
Setting Use Limits *36*
Loading Reagents *37*
RFID – RADIO FREQUENCY IDENTIFICATION 38
RFID Machine Setup *38*
RFID Loading *38*
RFID Specific Reagent Inspection *41*
Running the Load Sequence *44*
Loading Wax *45*
Loading Flush Reagents *47*
Flushing the Reaction Chamber *48*
Loading Dehydrants *49*
Loading Clearants *50*
Loading Fixatives *51*
MAKING ADDITIONAL CHANGES BEFORE PROCESSING 52

CHAPTER 3 – BASIC OPERATION 53

ROUTINE PROCESSING 54
Loading Specimens *55*
Starting a Program *57*
QUALITY CONTROL CHECKS 58
Instrument Faults *58*
MONITORING A PROGRAM 59
ADDING SPECIMENS 61
STOPPING A PROCESS 62
ABORTING A PROGRAM 63
COMPLETING A PROGRAM 63
Draining the Reaction Chamber *64*
Cleaning the Reaction Chamber *65*
Flushing the Reaction Chamber *66*
Flushing the Instrument *67*

ADVANCED PROCESSING 68
Selecting a Program *68*
Changing Program Parameters *70*
Adjusting the End Time *71*
Changing the Start Step *72*
Changing the Delay Settings *73*
Changing the Delay Step *75*
QUALITY CONTROL, FILTER AND REAGENT RENEWAL LIMITS 76
Filter and Reagent Usage Information *76*
Wax Discard and Reagent Rotation Information *77*
RENEWING FIXATIVE REAGENTS 78
RENEWING FLUSH REAGENTS 79
Renewing Dehydrants, Clearants and Infiltrants Using Rotation *80*
Reagent Rotation Example *82*

CHAPTER 4 - ADVANCED OPERATION 84

REAGENT MANAGEMENT 85
Configuring and Loading Reagents *85*
REAGENT AND FILTER QUALITY CONTROL 85
Reagent, Wax and Filter Checks *86*
Displaying Detailed Reagent Information *87*
Inspecting Reagents and Waxes *88*
Inspecting a Reagent *89*
RFID Reagent Inspection *90*
Discarding a Reagent after Inspection *90*
RFID Discarding *91*
Loading a Reagent or Wax after a Discard *93*
Rotating a Reagent or Wax after a Discard *93*
Running and Viewing Reports *94*
REAGENT ROTATION 96
Triggers for Reagent Rotation *97*
Requesting Reagent Rotation *100*
Concept Demonstration *101*
CUSTOMISATION AND WORKFLOW 102
Customising Your Instrument *102*
Setting the Workflow Processing Options *104*
PROGRAMS AND FLUSHES 106
Viewing Program or Flush Details *107*
Creating a New Program or Flush *111*
Editing a Program or Flush *114*
Start Type *120*
ACCESS CODE PROTECTION 121
Enabling Access Code Protection *122*
Adding a New System User *123*
Granting Access to a Function *124*
Removing Access to a Function *124*
Deleting a System User *125*
Deleting Admin *125*
AUDIO AND REMOTE ALARMS 126
Using Audio and Remote Alarms *126*
FILE OPERATIONS 128

Saving Programs and Flushes *129*
Loading Programs and Flushes *130*
Loading and Saving Setup *135*
SETTING LABORATORY INFORMATION MANAGEMENT SYSTEM (LIMS) MESSAGES 136
SYNTRI SERVICE 136
LANGUAGE 137
Changing the Display Language *137*
CUSTOMER SERVICES 138
The Customer Services Menu *138*

CHAPTER 5 - CLEANING AND MAINTENANCE 139

CLEANING SAFETY AND TASKS 140
Cleaning Safety *140*
Clearing Spillages *141*
Daily and Weekly Cleaning Tasks *141*
WAX AND WAX BATHS 142
Discarding Used Wax *142*
Cleaning the Wax Bath *142*
REAGENT AND FLUSH BOTTLES 143
Cleaning the Reagent Supply Bottle Dip Tubes *143*
Cleaning the Flush 3 Water Bottle *144*
GENERAL CLEANING AND MAINTENANCE 145
Cleaning the Display *145*
Changing Filters *145*
Regular Maintenance Checks *146*
Instrument Shutdown Procedure *147*
Unloading Reagents *147*
RFID Unloading *148*

CHAPTER 6 -TROUBLESHOOTING 152

FAULTS 153
Alert Icons *153*
Using the Fault Status Screen *155*
Processing Problems - Soft, Spongy Tissue *157*
Hard, Brittle Tissue *158*
FREQUENTLY ASKED QUESTIONS 159

APPENDICES 169

APPENDIX A - ACCESSORIES 170
Accessories Baskets *170*
Extraction Adaptor Kits *170*
Filters *170*
Reagent Bottles and Wax Kits *170*
General *170*
APPENDIX B - FITTING THE OPTIONAL VENT ADAPTERS 171
Extraction Vent Adapter *171*
Downdraft Extraction Vent Adapter *172*
APPENDIX C – REPACKING INSTRUCTIONS 173
APPENDIX D - APPROVED REAGENTS 178
APPENDIX E - PROGRAM EXAMPLES 179
Routine Overnight *179*

Daytime Rapids *180*
Standard Flush Program *180*
Extended Flush Program *180*

INDEX **181**

EMC Statement

This IVD equipment complies with the emissions and immunity requirements of IEC 61326-2-6:2012.

This equipment has been designed and tested to CISPR 11 Class A.

This equipment is intended for use in a laboratory environment, by a trained and qualified professional. In a domestic environment it may cause radio interference, in which case it may be necessary to take measures to mitigate the interference.

This device complies with part 15 of the FCC Rules. Operation is subject to the following two conditions: (1) This device may not cause harmful interference, and (2) this device must accept any interference received, including interference that may cause undesired operation.

The user manual or instruction manual for an intentional or unintentional radiator shall caution the user that changes or modifications not expressly approved by the party responsible for compliance could void the user's authority to operate the equipment.

This device complies with Industry Canada’s licence-exempt RSSs. Operation is subject to the following two conditions: (1) This device may not cause interference; and (2) this device must accept any interference, including interference that may cause undesired operation of the device.

Safety Information

Introduction

Thermo Fisher Scientific instruments are designed for convenient and reliable service; however, improper use or handling by a user may damage the instrument, or cause a hazard to health. The instrument must not be used in a manner not specified by Thermo Fisher Scientific. Correct maintenance procedures are essential for consistent performance. It is recommended that users secure a maintenance contract with our service department.

Any problems and queries should be referred to your Thermo Fisher Scientific service department.

The following sections contain important information for the safe setup and use of the instrument, and should be read and understood by the user before using the instrument.

General Safety

This instrument, as supplied, conforms to IEC61010-1 and IEC61010-2-101; however, the addition of chemicals introduces potential hazards. Good Laboratory Practice must be employed and consideration must be given to the potential for hazard when dealing with these chemicals.

Do not use the instrument in close proximity to strong electromagnetic radiation, as these may interfere with the proper operation. The electromagnetic environment should be evaluated prior to operation of the device.

Good Laboratory Practice must be used when handling tissue samples to prevent cross contamination and infection. The user should complete a risk assessment to determine any potential hazards related to tissue handling.

- Do not introduce any source of ignition into, or near, the instrument once it has been loaded with reagents.
- Do not remove any panels or access covers, unless specifically instructed to do so. The instrument does not have any user serviceable parts. Potentially lethal voltages are present inside the instrument.
- The instrument must be properly connected to a good earth, (ground) via the Mains input supply and positioned such that it is possible to interrupt the Mains supply at the source by removing the plug from the socket.
- Use only factory approved accessories or replacement parts within the instrument.
- Only use reagents recommended in the operator guide.
- If this instrument is used in a manner not specified by Thermo Fisher Scientific, the protection provided by the instrument may be impaired.

Disposal of Sealed Lead Acid Batteries

The sealed lead acid batteries within this instrument need to be replaced every year.

The battery manufacturers advise their customers to comply with the relevant regulations within their particular country regarding disposal of this type of battery.

The battery used within this instrument is:

- 12 V 12 Ah, valve regulated, sealed, lead acid type, rechargeable battery.

  This battery is classified as "Class 8 & Group III UN No 2800 Batteries, wet, non-spillable, electric storage, special provision A67", and meets all requirements of the International Air Transport Association (I.A.T.A) Dangerous Goods Regulations.

Batteries cannot be accessed by the customer and must only be replaced by trained service personnel.

Chemical Safety

The introduction of chemicals creates potential hazards. Thermo Fisher Scientific has adopted the following position with regard to the subject of volatile chemicals used in laboratories:

- Customers using non-specified chemicals in the instrument, do so at their own risk.
- All chemicals recommended by Thermo Fisher Scientific have auto-ignition temperatures considerably above any surface temperatures that can be reached during a single fault failure on the instrument.
- The instrument contains no source of ignition in any areas of the instrument where chemicals are stored, or likely to leak into, in a single fault condition.
- The operator is fully aware of the contents of the specification documents detailing the properties of the chemicals they are using.
- The operator has carried out any legally required assessment of chemicals used and is using Good Laboratory Practice.

- Some chemicals which may be used during operation are flammable - do not use sources of ignition in the vicinity of the instrument when it is loaded with reagents.

- Harmful chemical vapours such as Xylene or Toluene (others) may be emitted during the normal operation of some instruments and the operator should be aware of suitable precautions and safety measures. The short term exposure limits for Xylene and Toluene will be no greater 100 ppm

Environment

This instrument is required to comply with the European Union's Waste Electrical and Electronic Equipment (WEEE) Directive 2012/19/EU. It is marked with the following symbol:

Thermo Fisher Scientific has contracts with one or more recycling / disposal companies in each EU Member State, and this product and packaging should be disposed of or recycled through them. For further information, contact your Thermo Fisher Scientific service representative.

Warranty Statement

Thermo Fisher Scientific is proud of their quality, reliability and of our after-sales service. We continuously strive to improve our service to our customers.

Please ask your distributor or Thermo Fisher Scientific representative about service contracts which can help maintain your instrument in an optimal operating condition.

Warranty provisions necessarily vary to comply with differences in national and regional legislation. Specific details can be found in the delivery documentation or from your dealer or representative.

Please note that your warranty may be invalidated if:

- This instrument is modified in any way, or not used as intended by Thermo Fisher Scientific.
- Accessories and reagents which have not been approved by Thermo Fisher Scientific are used.
- The instrument is not operated or maintained in accordance with instructions.
- The installation of the instrument was not conducted by a certified Thermo Fisher Scientific representative.

How to use this Guide

Introduction

The Thermo Scientific Revos, (referred to as Revos) is intended for use in pathology laboratories by operators familiar with tissue processing techniques and laboratory equipment.

Before operating the Revos, ensure that you have read and understood the Safety Information and the relevant sections in this Operator Guide.

Chapter Summary

This Operator Guide is structured to let you start processing quickly and safely with Revos.

Chapter 1 - Introduction to Revos

This chapter gives a tour of the instrument and its features. It describes the different parts of the instrument and gives general information about using Revos.

Chapter 2 - Installation and Setup

This chapter is a guide to installing and setting up Revos.

Chapter 3 - Basic Operation

This chapter explains how to load and process specimens using Revos on a day-to-day basis.

Chapter 4 - Advanced Operation

This chapter is for advanced users and administrators and describes how to change the instrument's settings and create processing programs.

Chapter 5 - Cleaning and Maintenance

This chapter describes how to clean and maintain Revos to ensure that processing is safe, efficient and reproducible.

Chapter 6 - Troubleshooting

This chapter helps identify and resolve common faults and issues.

Chapter 1 – Introducing Revos

Welcome to the Revos Operator Guide.

This chapter introduces the Revos and provides an overview of the instrument.

The following subjects are covered:

- Introduction to Revos
- Identification of Parts
- System Specifications
- System Interface

Introduction to Revos

The Thermo Scientific Revos is an enclosed automated tissue processor. It combines custom programming with simple operation and reagent management.

Specimen cassettes are loaded into the instrument in baskets. Up to 300 cassettes can be processed at any one time in standard baskets; optional mega baskets allow up to 42 Super Mega Cassettes to be processed simultaneously.

When you start a processing program, Revos moves through the process steps, drawing in reagents in turn and agitating the baskets to stir reagent around the specimens. The instrument can be set up to heat the chamber and put the chamber under constant vacuum, cycled vacuum or cycled pressure conditions for individual process steps. Samples can be processed unattended either overnight or during the day, refer to the Audio & Remote alarms section.

For more information and step-by-step instructions, refer to Routine Processing. If you require more flexibility, refer to Advanced processing for information on how you can take full control of processing parameters.

IVD Intended Use

The Revos is an in vitro diagnostic device.

It is intended to be used in a laboratory environment for the rapid and routine fixation, dehydration, clearing and infiltration of pathology specimens.

Tissue Cassettes

Note

The cassettes used in Revos baskets are to be no larger than the following:

Ordinary Cassette - 44.0 x 29.5 x 7.5 (mm)

Mega Cassette - 75.9 x 19.0 x 52.5 (mm)

These are loaded either into standard baskets or mega baskets (ideal for larger specimens in mega cassettes), which are loaded into the instrument in pairs. Refer to Appendix A - Accessories for details.

Battery Backup

The Bios memory is backed up by a NiMH battery to maintain settings when the instrument is off. While the Revos is powered, this battery is trickle-charged.

The instrument uses four 12V 12Ah sealed (gel type) lead acid batteries for main battery backup to maintain operation during a temporary mains power fail.

Approved Reagents

Revos must be installed, loaded and used ONLY with reagents from the approved reagent list shown in Appendix D – Approved Reagents.

You must not use any other reagents with Revos under any circumstances.

Some chemicals which may be used during operation are flammable – do not use sources of ignition in the vicinity of the instrument when it is loaded with reagents.

Harmful chemical vapours such as xylene and toluene may be emitted during the normal operation of some instruments, and the operator should be aware of suitable precautions and safety measures.

Identification of Parts

The following diagrams identify the different components of Revos. Familiarise yourself with the location of the Reaction Chamber, USB port, filters, wax baths, waste wax tray, fixative and flush reagent bottles and exchange bottles.

The Dehydrants and Clearants are stored in the back of the instrument in concealed bottles and cannot be accessed directly.

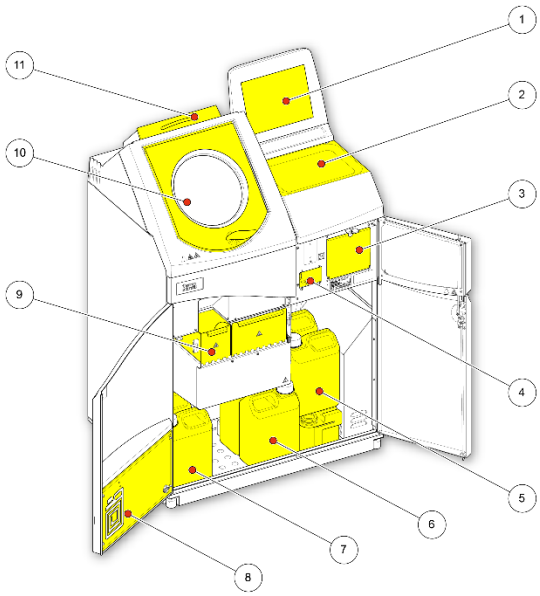

Revos (front view, doors open)

1. Touch screen
2. Removable tray
3. Filter compartment
4. USB port
5. Flush reagent bottles
6. Exchange bottles
7. Fixative bottles
8. RFID assembly
9. Wax baths and waste wax tray
10. Reaction Chamber
11. Downdraft filter compartment

The USB port is for memory sticks only.

Do not connect any other type of USB device to the Revos.

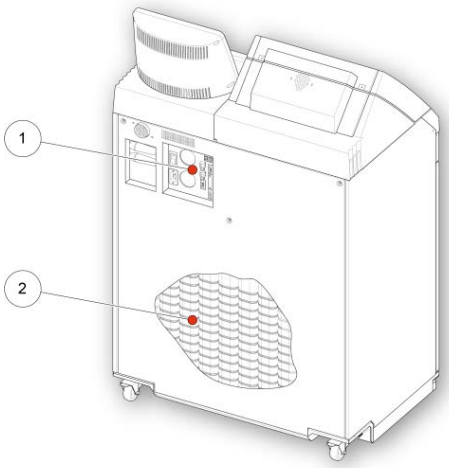

Revos (rear view)

1. Electrical connections panel
2. Concealed reagent bottles

System Specifications

The specifications for the Revos instrument are detailed in the following tables.

Use safe lifting practices when moving the instrument. Revos weighs approximately 165 kg (363 lb) when empty and 240 kg (529 lb) when full. At least two people are required to safely move the instrument. Ensure you do not tilt the instrument during movement.

Mechanical Specifications

Width	850 mm (33.4 in)
Depth	580 mm (22.8 in)
Height to working area (with tray)	1080 mm (42.5 in)
Height to top of monitor	1370 mm (54 in)
Weight with no reagents	165 kg (363 lb)
Weight with typical reagents	240 kg (529 lb)
Maximum working pressure	0.2 bar(g)

Electrical Specifications

Power Supply Voltages	100 - 240 VAC (~) *Maximum supply voltage fluctuations not to exceed ± 10% of nominal voltage.*
Frequency	50 / 60 Hz
Power	1300 VA (maximum) 300 VA (typical)

Interface Connections

Remote Alarm	24 V DC, 3A max, operation non-powered output *The external remote alarm must comply with IEC60950 or IEC61010-1.*
LIMS	Serial RS232
Netmon	RJ45

Fuses

Fuses must be replaced by technically competent personnel only

Remote alarm fuses (x 2)	F 5A 250V

Environmental Specifications

For indoor use only

Temperature (operating limits)	+5°C to +40°C (+41°F to +104°F)
Temperature (recommended operation)	+15°C to +30°C (+59°F to +86°F) Performance may deteriorate when operated outside this temperature range.
Temperature (transit/storage)	-25°C to +55°C (-13°F to 131°F)
Humidity	Maximum 80% RH at 31°C (88°F) decreasing linearly to 50% RH at 40°C (104°F)
Altitude	Up to 2000 m (6500 feet)
Pollution Degree	2
Over Voltage Category	II

The Revos Interface

Revos has a compact and informative user interface that displays the following information:

- Context sensitive help
- Reaction Chamber status, program details and process status
- Graphics, showing processing and reagent movement in real time

Using the Touchscreen

The Revos Touchscreen user interface is used to initiate processing and set system preferences and settings. To use the screen, simply press the button corresponding to the function that you want to use. For some tasks, for example reviewing quality control information, select the required reagent container, wax bath or filter by touching the picture that corresponds to the item.

Note

Avoid using sharp or pointed objects to press buttons on the Touchscreen. Use a finger (with or without gloves), or, if you require a stylus, use the eraser-tipped end of a pencil.

Number Pad

The on-screen number pad is used to enter access codes and define some instrument settings.

- To clear the entered value back to zero, press C.
- To delete the last digit that you entered, press ⇦.

Note

If you enter an invalid value, the value is displayed in red text. You will not be able to press OK on the screen until the value is corrected.

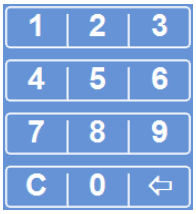

The on-screen number pad

Keyboard

The on-screen keyboard appears when you need to define or change the names of reagents, programs, flushes and system users.

- Press the appropriate keys to edit text in the text box above the keyboard.
- To save your changes and return to the previous screen, press OK.
- For special characters, press the Alt key.

Example special characters

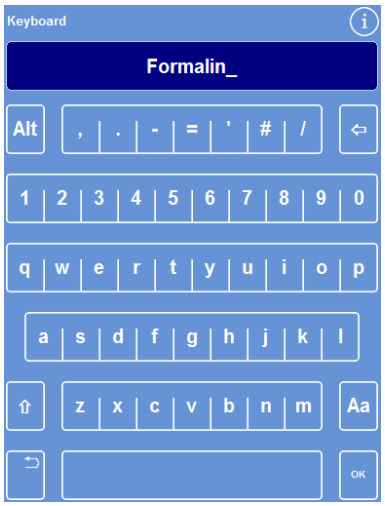

The on-screen keyboard

Menus, Options and Buttons

The Touchscreen interface lets you perform tasks intuitively, efficiently and consistently. Refer to Appendix F – Screen Maps for a diagrammatic representation of the instrument's menu options and the screens that are accessible from the Touchscreen.

OK and Back Buttons

If you change system settings or create new programs, ensure that you press the correct button to exit from the screen.

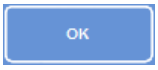

Takes you back to the previous screen and saves any changes you made to settings on the current screen.

Takes you back to the previous screen without saving the changes that you made to any of the settings on the current screen.

Using the Up and Down Buttons to Set Values

When you are setting the system time and date, you will be presented with a set of up and down arrow buttons. Press these buttons to set the required time or date.
Refer to Setting the System Time and Date.

Up and down arrow buttons

Selected Settings in Yellow

Some instrument settings can be selected or enabled by pressing on the required option.

When selected, the text is displayed in yellow rather than white.

For example, three processing options are available (Single Program, Daytime Overnight or No Default); the one in use (Daytime Overnight) is shown in yellow.

The selected setting is shown in yellow

On-screen Help

Revos includes context-sensitive on-screen help to quickly answer any queries you may have about the operation and setup of the instrument. More detailed information is provided in this Operator Guide.

- To display on-screen help, press the icon which is displayed in the top right of each screen.
- To continue, press OK to close the help window.

The Main Screen and Information Bar

The Main Screen provides access to all of the functions that are required to initiate programs and flushes, check the status of the reagents and filters, and configure the instrument to meet the requirements of your own laboratory.

Menu Options

The main menu is located on the right side of the Main Screen:

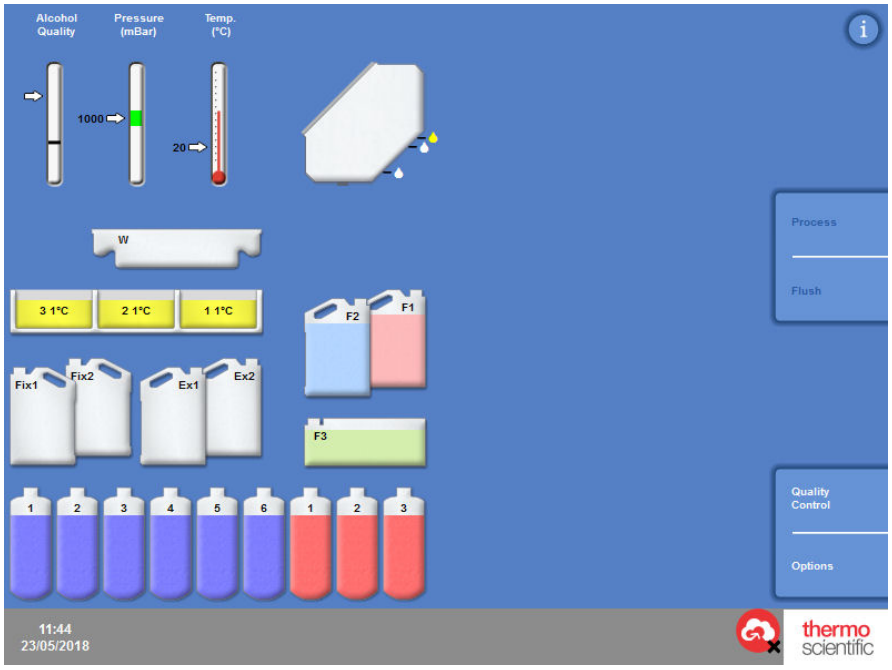

The Main Screen

The following menu options are available:

- Process: This opens either the Reaction Chamber Available screen, from where you can start a processing program, or the Reaction Chamber Not Available screen, if there are no reagents loaded or the chamber is not prepared to start.
- Flush: This opens the Select Flush screen. From here, you can start Flush programs to clean the Reaction Chamber.
- Quality Control: This opens the Quality Control screen. From here, you can visually inspect reagents in the chamber, review use counts for reagents and filters and view and print quality control reports. Warning triangles provide visual alerts to problems that may affect processing.
- Options: This opens the Options menu, which provides access to menus and settings that enable the instrument to be customised and configured.

Information Bar

The Information Bar is located at the bottom of the interface.

System information displayed at the bottom of the interface

It displays the following information:

- System date and time: The current date and time. Refer to Setting the System Time and Date.
- Alert icons: These include quality control alerts and hardware issues. Refer to Alert Icons.
- Instrument ID and Customised text: Customisable text that can be used to record customer-specific information about the instrument. Refer to Customising Your Instrument.

Gauges, Reaction Chamber Status and Reagent Monitoring

On the left side of the Main Screen is a series of gauges for monitoring the status of reagents and associated components. The following gauges appear in the top-left position on the Main Screen:

Alcohol Quality

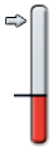

This gauge shows the quality of alcohol used in the A1 bottle. Quality is determined using specific gravity measurements. When the specific gravity falls beneath a specified value (shown on the Alcohol Quality Gauge as the red area), you will be prompted to rotate reagents to maintain the quality of processing. Refer to Alcohol Quality Warning.

The red area is adjustable up or down in steps of approximately 1.25%. The black line indicates the factory default setting which is approximately 45%.

Pressure

This gauge shows the pressure in the Reaction Chamber. The value will rise and fall during processing according to the vacuum conditions specified in the selected program and as reagents are drawn into and drained out of the Reaction Chamber.

The Reaction Chamber lid can be opened when the value is in the green area of the gauge.

Temperature

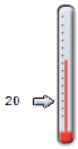

This gauge shows the temperature in the Reaction Chamber. The value will rise and fall during processing according to the conditions specified in the selected program.

Reaction Chamber and Containers

On the left side of the Main Screen is a graphical representation of the Reaction Chamber and various reagent containers. The level of reagents indicated in these will change during processing, reagent inspection, reagent renewal and rotation.

The following colours represent the type of reagent in each of the containers:

- Green – Water-based (fixatives and Flush 3)
- Blue – Dehydrants (alcohol and Flush 2)
- Red – Clearants (xylene and Flush 1)
- Yellow – Wax / Paraffin

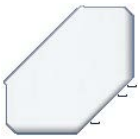

Reaction Chamber

Waste wax tray

Wax baths

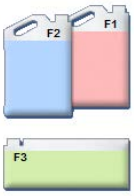

Flush bottles

Exchange bottles

Fixative bottles

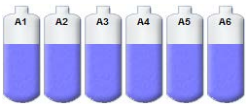

Reagent bottles: dehydrant (alcohol)

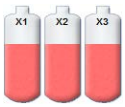

Reagent bottles: clearant (xylene)

Chapter 2 - Installation and Setup

This chapter describes the installation and setup procedures for Revos and covers the following subjects:

- Unpacking and positioning the instrument.
- Fitting the filters into the instrument.
- Connecting the instrument to mains power and switching on.
- Choosing the display language and setting the system time and date.
- Defining and loading reagents in preparation for specimen processing.

Note

If Revos has already been installed and the required reagents have been loaded, refer to Chapter 3 - Basic Operation for a description of the routine operation of the instrument.

Unpacking and Moving the Instrument

Unpacking

Inspect the packaging. If it is damaged, or the contents do not match the supplied packing list, or both, inform your local Thermo Fisher Scientific representative then unpack the instrument and inspect it carefully. Instructions for unpacking are provided on the packing case.

When unpacking the instrument, do not discard the packaging – store it flat for future use.

Note

Quote the instrument Serial Number, your Order Number, Invoice Number, Delivery Note (or Packing Slip) Number and the Date in all communications. If you need to transport the instrument, refer to Appendix C – Repacking Instructions.

Moving the Instrument

Use safe lifting practices when moving Revos.

At least two people are required to move the instrument.

The instrument should not be moved or tilted when it is loaded with reagents and molten wax.

Revos weighs approximately 240 kg (529 lb) when fully loaded and 165 kg (363 lb) when empty.

Moving the instrument when empty

To Move the instrument through a doorway, the four red locking pins must be removed from both sides of the back wheels. This action allows the wheels to rotate. The pins can be stored in the four positions under the handle located at the back of the instrument. They will be required if the instrument has to be shipped in the future.

Instrument Positioning and Setup

Centre of Gravity Positions

Where seismic regulations require the instrument to be secured, use the handle locations at the rear of the instrument (2 x M8 female threads).

The following diagrams illustrate the centre of gravity positions for an empty Revos and a Revos loaded with an average load of reagents:

Empty instrument:

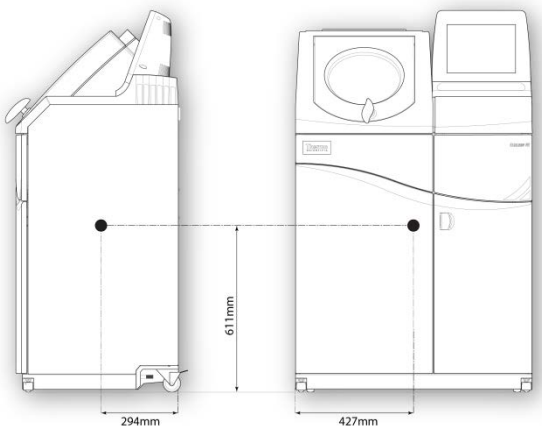

Centre of gravity position (empty)

Instrument with an average load of reagents:

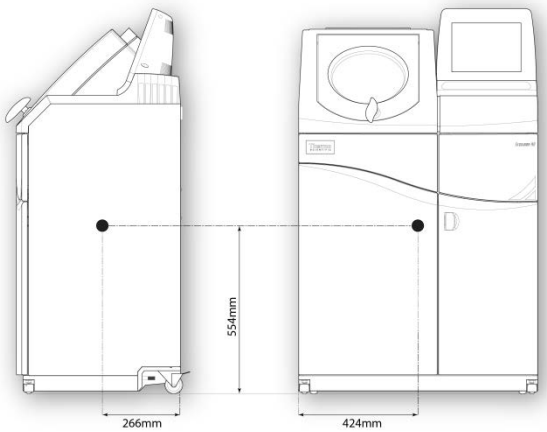

Centre of gravity position (average load of reagents)

Levelling the Instrument

Revos must be level from front to back.

Before loading the instrument with reagents and wax, ensure that it is level.

To level the instrument:

- Move Revos to its final position. The floor should be level and any floor covering must be non-flammable. There should be at least 95 mm (4 inches) behind the instrument. To maintain this distance, leave the transit handles fitted.
- If necessary, adjust the front castors to level the instrument. To do this, using the provided wrench (spanner) and adjustment rod, loosen the locknut with the wrench and then turn the castor with the adjustment rod. When the instrument is level, tighten the locknut.

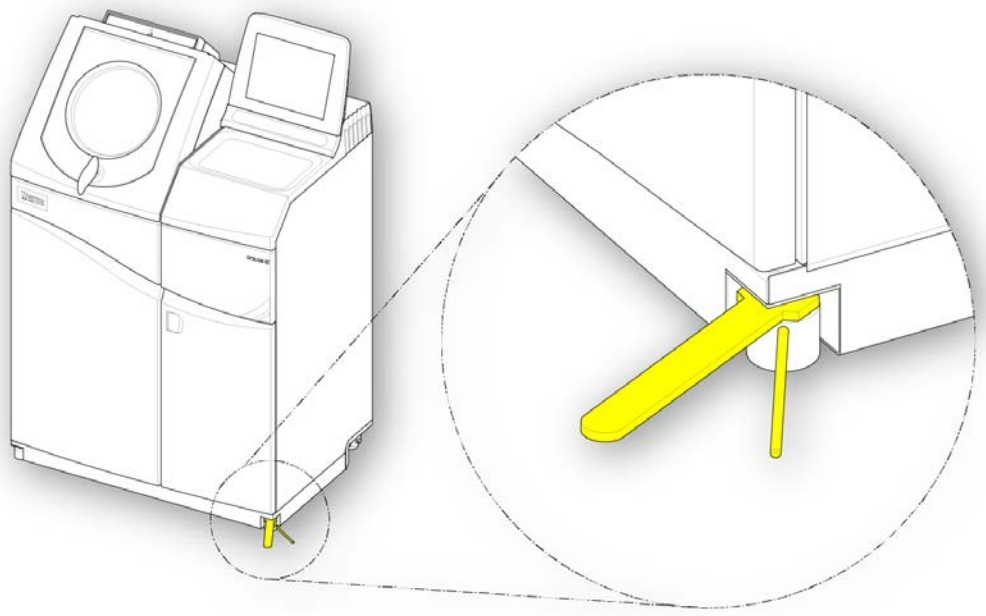

Adjusting the front castors

Fitting the Filters

Revos is delivered with new filters packed inside the instrument. Plastic wrappers must be removed and fitted in the correct locations before use.

For additional information about the filters, refer to Filter and Reagent Usage Information and Reagent and Filter Quality Control.

Note

The filters fit tightly into their slots for efficient extraction. It is recommended that you replace the filters every 13 weeks.

Fitting Extraction Filters

Both extraction filters must be fitted; it is not possible to operate the instrument if either filter is missing.

For correct operation of the extraction system, ensure that the doors are closed.

The two main extraction filters, separated by a removable metal baffle, are located in a compartment behind the right door. The upper filter uses potassium permanganate to extract formaldehyde vapours. The lower filter uses charcoal to extract solvent vapours.

If you are replacing filters, remove the old filters from the instrument and install new filters. Dispose of the used filters in accordance with your local regulations and procedures.

To remove and replace the air extraction filters:

- Open the right door of the instrument, turn the filter door latch 90° clockwise and open the filter door.
- Remove the metal baffle plate.
- Slide out the old filters and remove the plastic wrapper from each new filter and fit in the instrument.
- Replace the filters in the correct positions (upper = formaldehyde, lower = charcoal) so that the airflow arrow on each filter points up.
- Replace the baffle plate, close the filter door securing it with the latch, and then close the right-hand door.

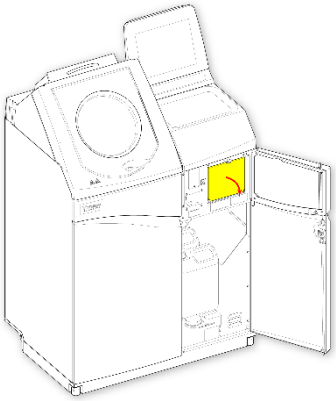

Opening the filter door

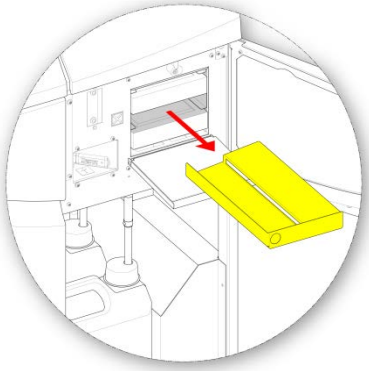

Removing the baffle plate

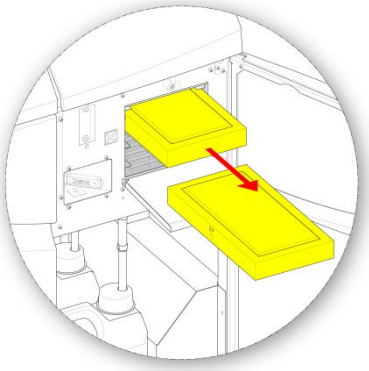

Removing the filters

Fitting the Downdraft Filter

The downdraft filter (formaldehyde) is at the back of the instrument, behind the Reaction Chamber.

When you fit the downdraft filter, ensure you use a formaldehyde filter and NOT a charcoal filter in this position.

If you are replacing filters, remove the old filters from the instrument and install new filters. Dispose of the used filters in accordance with your local regulations and procedures.

To remove and replace the downdraft filter:

- Open the downdraft filter cover.
- Using the tab on the filter, lift out the old filter and remove the plastic wrapper from the new filter and fit in the instrument.
- Replace the filter in the correct position, ensuring that the airflow arrow points away from the instrument, and close the filter cover.

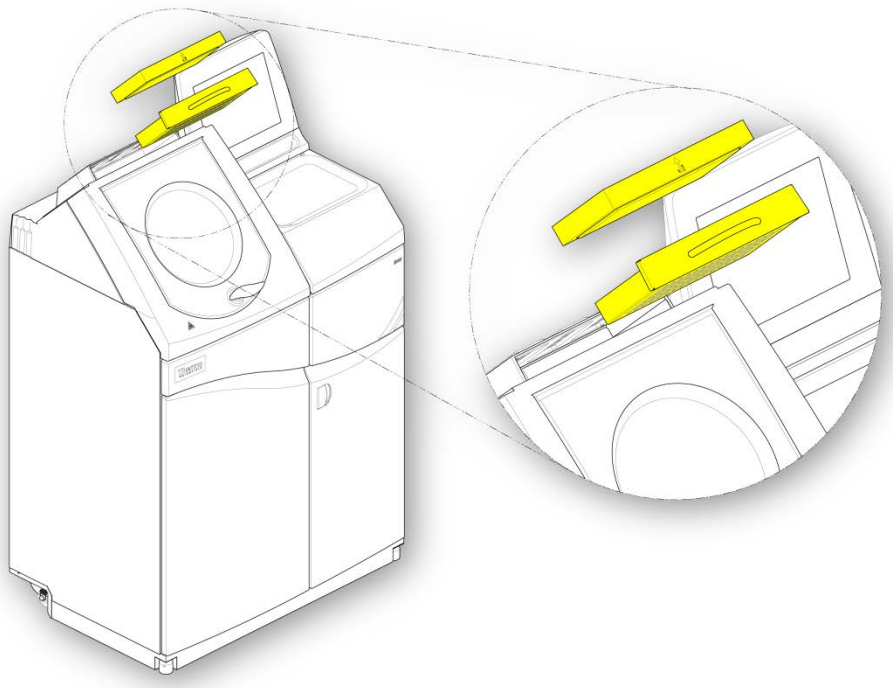

Removing the filter

Optional Vent Adaptors

The optional vent adapters allow fumes to be extracted from Revos into a fume cupboard or hood, or vented to the outside atmosphere.

For more information, refer to Appendix B – Fitting the optional Vent Adaptors.

Connections

Connecting to Mains Power

Once Revos has been unpacked and installed, it can be connected to mains power.

Ensure that the mains supply voltage corresponds with the voltage rating on the rating plate on the back of the instrument.

The ~ symbol on the rating plate indicates that the instrument operates on an alternating current supply (AC).

To connect the instrument to mains power:

- Ensure that the I/O power switch at the rear of the instrument is switched off (O side of the switch pushed in)

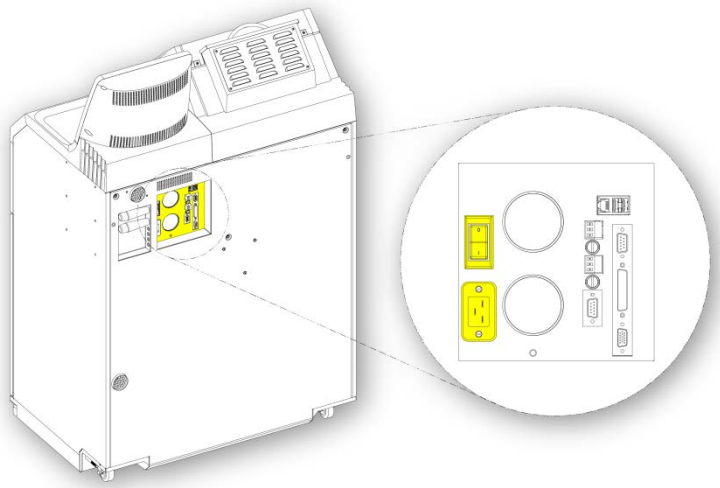

Mains power connections

- Insert the appropriate mains cable into the mains connector on the rear panel of the instrument.
- Connect the mains supply cable to a local power supply outlet.

Connecting a Remote Alarm

Connections for Remote Alarms 1 and 2 are on the back panel of the instrument. For more information, refer to Audio and Remote Alarms.

Note

Connection of a Remote Alarm is highly recommended.

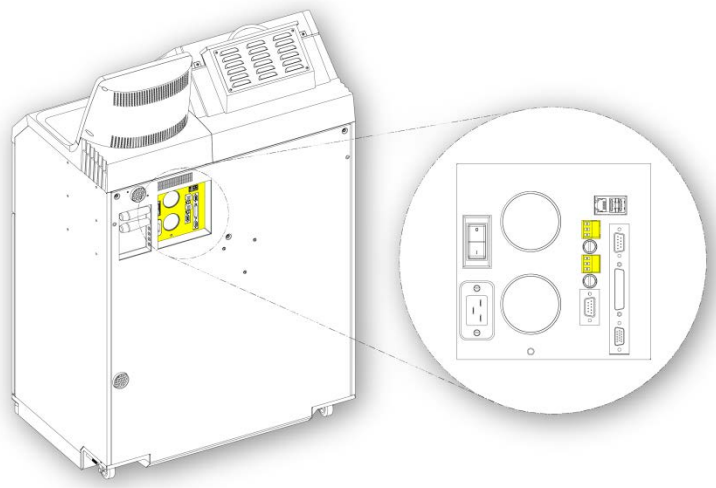

Remote alarm connections

Normal operating conditions for these relays are:

- Relay 1 - unpowered state.
- Relay 2 - powered state.

Note

Relay 2 is used as a power fail alarm and is in the alarm condition when the instrument is first switched on.

External circuits must be connected to the remote alarm socket by a technically competent person. The external circuit should comply with the requirements of either IEC 61010-1 or IEC 60950, or both.

Make sure the cable length is less than 3 metres long.

Connecting an Autodialer

The following two methods, can be used when connecting an autodialer to the instrument for remote alarm monitoring.

Typically, connection to Alarm 2, is recommended as this gives a positive alarm state if the instrument shuts down.

- Connection to Alarm 1 (Daytime)

  Closed: Relay fires when an alarm is generated.

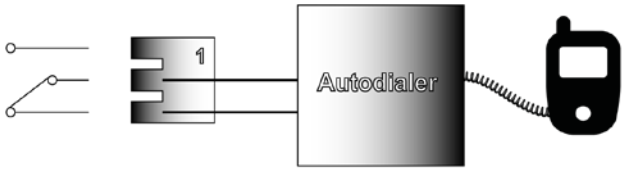

Autodialer connection to Alarm 1

- Connection to Alarm 2 (Over Night)

  Held Closed: Relay closed and released when an alarm is generated.

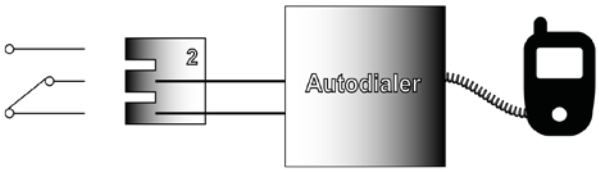

Autodialer connection to Alarm 2

Note

During power-up, alarms will be active but will go to a normal state once the instrument software has loaded.

Connecting to a Laboratory Information Management System (LIMS)

Revos can be programmed to send user-defined LIMS messages via the serial D-connector (RS-232) on the back of the instrument when specific events occur.

For details on the type of messages that can be sent and how to set them, refer to Setting Laboratory Information Management System (LIMS) Messages.

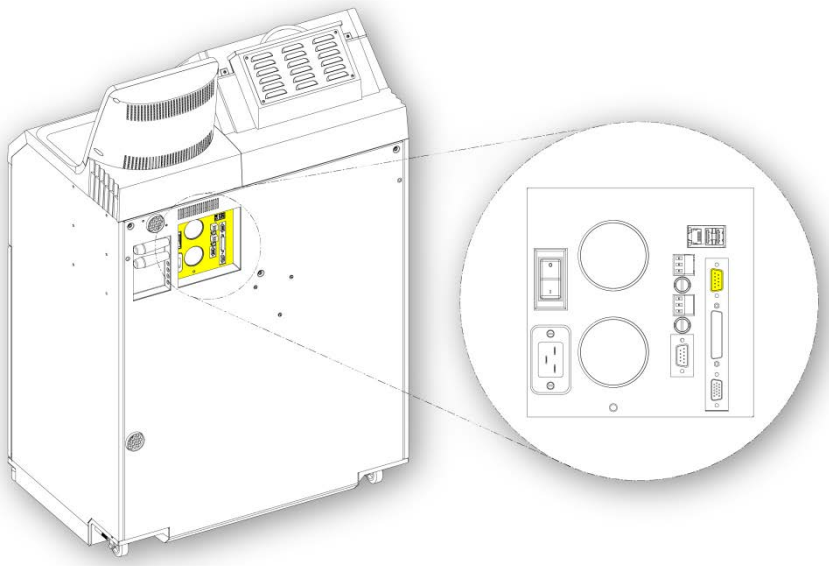

LIMS Serial D-connector

LIMS Specification

Baud rate:	19200
Bits:	8
Parity:	None
Stop bits:	1
Handshaking:	Data Terminal Ready (DTR) and Request To Send (RTS)
Cable length:	To be less than 3 metres

Initial Setup

Once the instrument has been unpacked, installed in the required location and connected to mains power, you must then:

- Switch the instrument on.
- Wait for the system software to load.
- Choose the language for the user interface.
- Check the system time and date.
- Configure the reagents that you intend to use.
- Set use limits for fixatives, filters and flush reagents.
- Load reagents into the instrument.

Instrument Start-up Procedure

Once Revos has been connected to the mains power it can be switched on.

To switch the instrument on:

Press the I (ON) side of the I/O power switch.

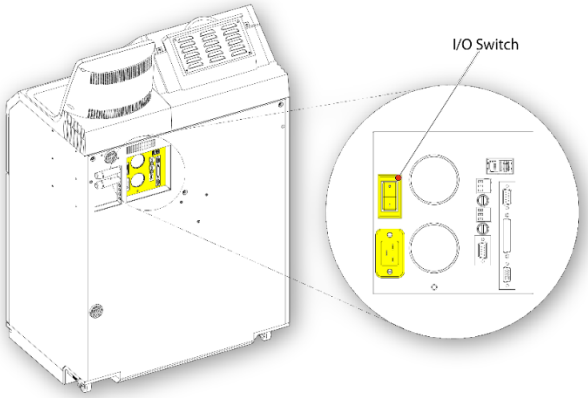

Mains power connections

When Revos is powered 'ON', you should hear the cooling fans start.

After about 35 seconds, the Thermo Scientific logo is displayed.

After about two minutes, the Select a Language screen is displayed.

To select the system language:

- From the Select a Language screen, press the required language and then press OK.
- The Main Screen is then displayed. For a description of the Main Screen functions, refer to The Main Screen and Information Bar.

Note

Notice that all the containers and bottles on the left of the display are empty. When reagents have been loaded into the instrument, they will appear full with colour-coded reagents.

Alert icons are displayed at the bottom of the screen and must be cleared, refer to Clearing the Alert Icons.

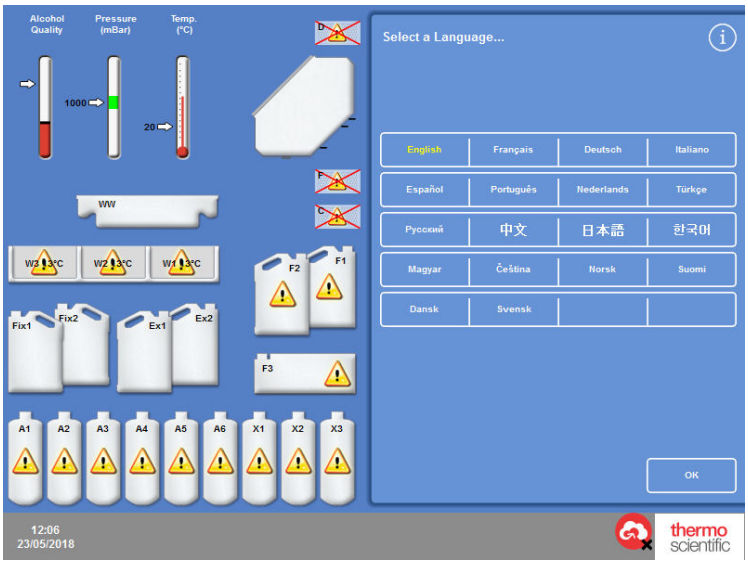

Selecting the user interface language

Clearing the Alert Icons

When the instrument is first switched on, alert icons are displayed in the grey Information Bar at the bottom of the screen. These icons must be cleared before any further operations.

Icon	How to clear
	Battery Isolation Switch Alert Turn on the Battery Isolation switch to restore battery backup and ensure power to the instrument. Leave the battery switched on and do not switch it off unless instructed to do so. See below for the location of the switch.
	Reaction Chamber Heater Trip Alert Press the Heater Reset switch to reset the Reaction Chamber heater trip circuit. See below for the location of the switch.
	Quality Control Alert From the Main Screen, select **Quality Control** to display the Quality Control Screen. Load reagents if required. For more information, refer to Loading Reagents and Quality Control Checks.
	Hardware Issue Select **Options** > **Faults**, or press the wrench (spanner) icon, to display the Fault Status screen. From here, you can clear or acknowledge any faults. For more information, refer to Using the Fault Status Screen. **Note** *On starting the system, this icon is displayed until the Heater Reset Switch has been pressed.*

Battery Isolation, Heater Reset and Push to Test Switches

The switches are shown below. The inset shows the view inside the cabinet, behind the right door, above the flush reagent bottles (the pipes have been hidden for clarity):

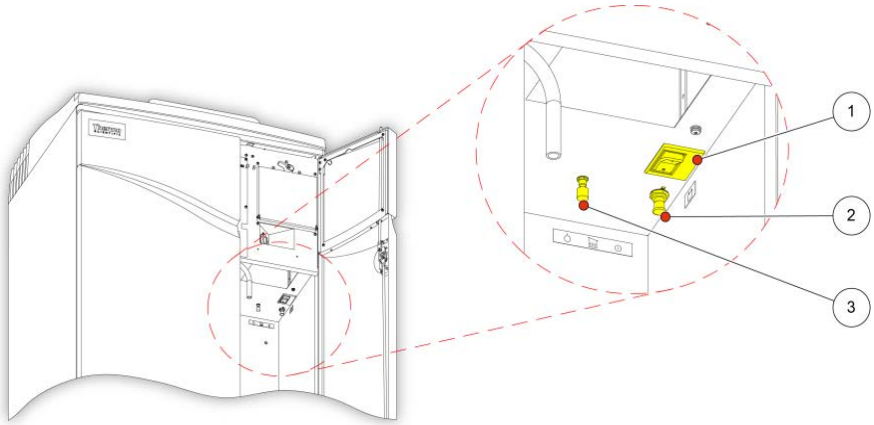

1. Battery Isolation switch
2. Heater Reset Switch
3. Push to Test Switch

Note

When the Heater Reset switch is set and the Battery Isolation switch is turned on, the icons disappear from the display.

When first charging the battery, after switching on both the Main I/O power switch and the Battery Isolation switch, the instrument should be left for a period of 14 hours (overnight) to ensure the battery is fully charged.

The Push-to-Test switch can be used to test the operation of the Heater Reset switch.

Setting the System Time and Date

Once you have selected the display language, check the system time and date and adjust them if necessary.

Note

It is important to set the time and date correctly so that programs start and end at the correct time and on the correct day. Both time and date can be changed later, as required.

To set the system time:

- From the Main Screen, press **Options** to display the Options menu.
- Press **Set Time** to display the Options - Set Time screen.

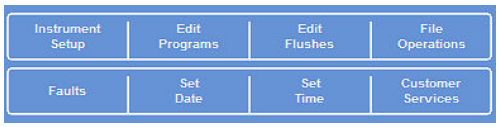

Options menu

- To toggle between 12 and 24 hour time format, press **12/24**.

  When selected (yellow text), the time is shown in 12-hour format as 'AM' or 'PM'; when not selected it is shown in 24-hour format:

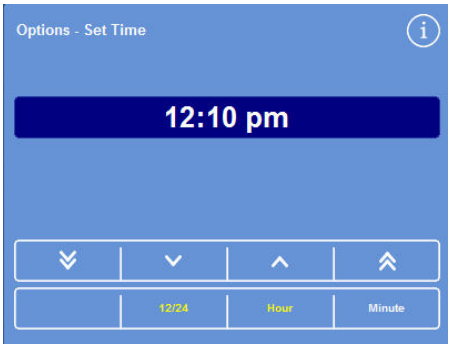

Setting the system time - 12 hour format

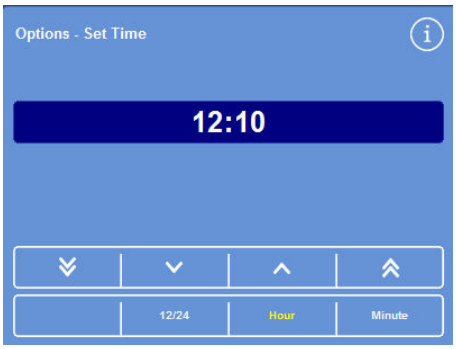

Setting the system time - 24 hour format

- Press **Hour** or **Minute** and use the up and down buttons to set the required time.
- Press **OK** to save the time setting and return to the Options screen.
- Press **OK** again to return to the Main Screen.

	Moves the time back in 5 minute or 5 hour increments.
	Moves the time back in 1 minute or 1 hour increments.
	Moves the time forward in 1 minute or 1 hour increments.
	Moves the time forward in 5 minute or 5 hour increments.

Up and down buttons

To set the system date:

- From the Main Screen, press **Options** to display the Options menu.
- Press **Set Date** to display the Options - Set Date screen.

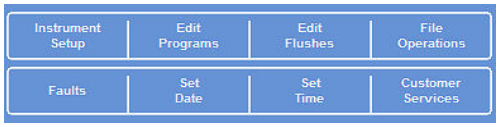

Options menu

- Choose the required date format by pressing the appropriate button. The selected date format is shown in yellow text.

  Available date formats are:

  dd/mm/yyyy

  mm/dd/yyyy

  yyyy/mm/dd

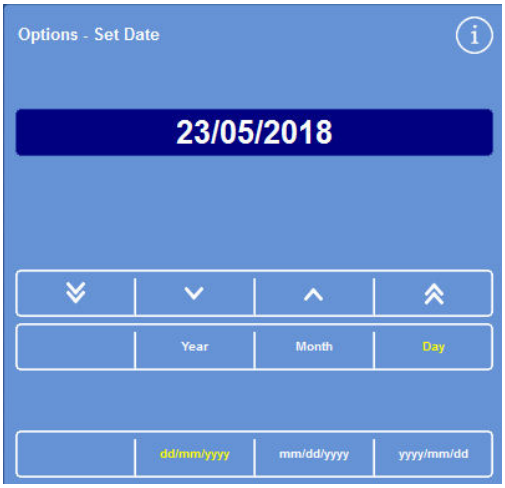

The Options - Set Date screen

- Select **Year**, **Month**, or **Day** and use the up and down buttons to set the required date.
- Press **OK** to save the date setting.
- Press **OK** again to return to the Main Screen.

	Moves the date back in 5 day, 5 month or 5 year increments.
	Moves the date back in 1 day, 1 month or 1 year increments.
	Moves the date forward in 1 day, 1 month or 1 year increments.
	Moves the date forward in 5 day, 5 month or 5 year increments.

Up and down buttons

Note

The time and date are displayed in the bottom left corner of the Screen:

Time and date display

Configuring Reagents

Before you load the reagents into the instrument, you must define the following:

- Names of the fixative, dehydrant, clearant, infiltrant and flush reagents that will be used.
- Storage temperatures for the concealed reagents and infiltrants.
- Use limits for fixatives, filters and flush reagents.

Defining Reagent Names

By default, Revos uses the following reagent names:

- *Formalin* for the fixatives (fixative bottles Fix1 and Fix2).
- *Alcohol* for the dehydrants (concealed reagent bottles A1–A6).
- *Xylene* for the clearants (concealed reagent bottles X1–X3).
- *Wax* for the infiltration reagents (wax containers W1–W3).
- *Flush* for the flush reagents (flush containers F1, F2, F3).

  These names can be changed, as required.

To define reagent names:

- From the Main Screen, select Options > Instrument Setup.

  The Options - Instrument Setup menu appears:

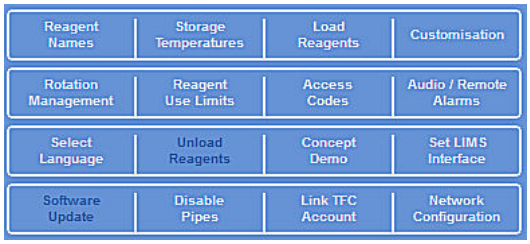

The Options - Instrument Setup menu

- Press Reagent Names.

  The Instrument Setup - Reagent Names screen appears:

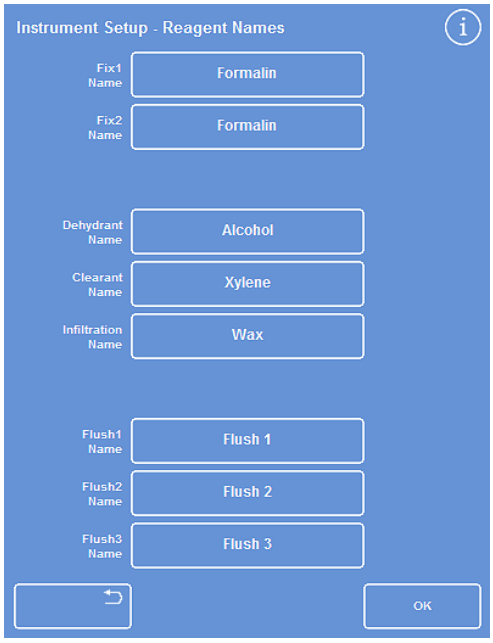

The Instrument Setup - Reagent Names screen

- Press the button corresponding to the name that you want to change:

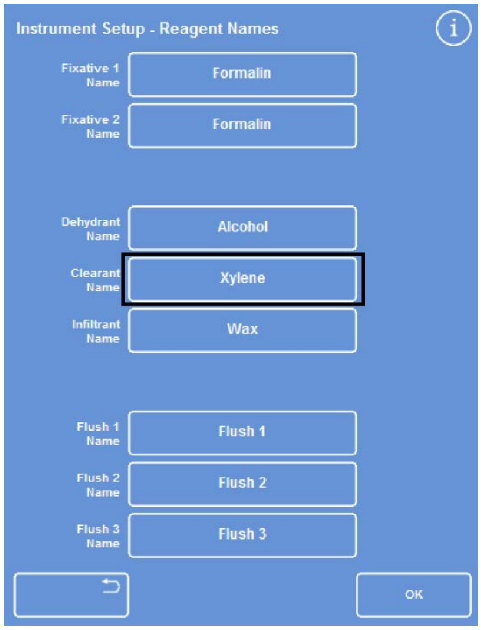

Setting reagent names

- Use the on-screen keyboard to type the new name of the reagent and press OK.

Note

A maximum of 20 characters can be used for reagent names.

- Change the names of other reagents, as required.
- Press OK to save and return to the Instrument Setup - Reagent Names screen.
- To return to the Main Screen, press OK repeatedly.

Note

On-screen, the first letter of the name labels for each of the wax baths, dehydrant bottles and clearant bottles, will change to match the first letter of the new reagent name.

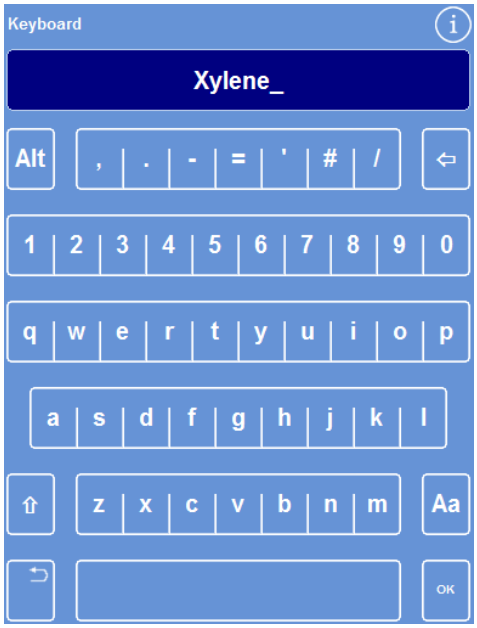

Defining a reagent name using the on-screen keyboard

Setting Reagent Storage Temperatures

Revos can heat the concealed reagents for faster, more consistent processing. The default storage temperatures are 35°C for alcohol and xylene and 62°C for wax. Storage at ambient temperature is available for the concealed reagents, if required. The instrument will not cool reagents to temperatures lower than ambient.

Note

Wax storage temperature should be set at 4°C above wax melting temperature. If the wax melting point is given as a temperature range, then the wax storage temperature should be set at 4° C above the highest value in the range.

To set wax storage temperature:

- From the Main Screen, press Options > Instrument Setup > Storage Temperatures.

  The Instrument Setup - Storage Temperature screen appears:

- Press the Wax Storage Temp. value.

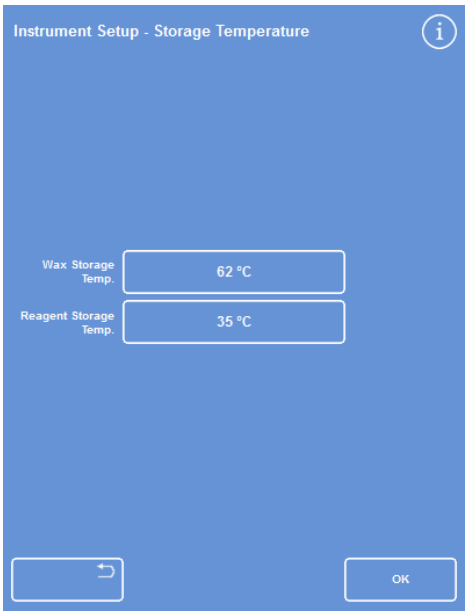

Defining wax storage temperature

  The Storage Temperature - Set Wax Storage Temperature screen appears:

- Use the number pad to set the required storage temperature or press Amb. to set the storage temperature to ambient.

Note

The wax storage temperature range is 45°C to 65°C and ambient.

Invalid entries will be displayed in red and cannot be saved.

- Press OK to save and return to the Instrument Setup - Storage Temperature screen.

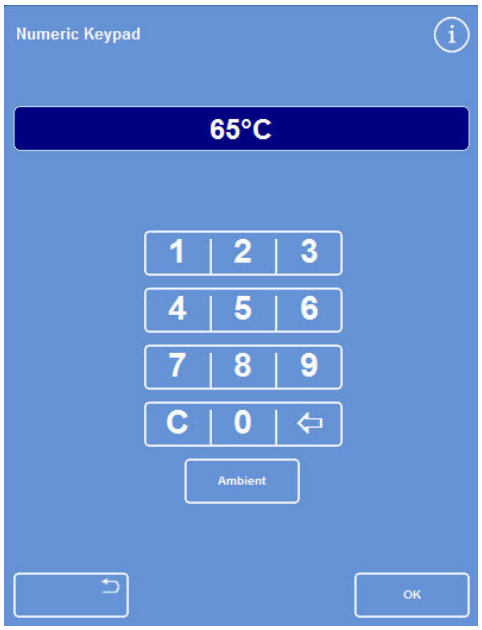

The Storage Temperature - Set Wax Storage Temperature screen

To set reagent storage temperature:

- From the Main Screen, select **Options** > **Instrument Setup** > **Storage Temperatures**.

  The Instrument Setup - Storage Temperature screen appears:

- Press the **Reagent Storage Temp**. value.

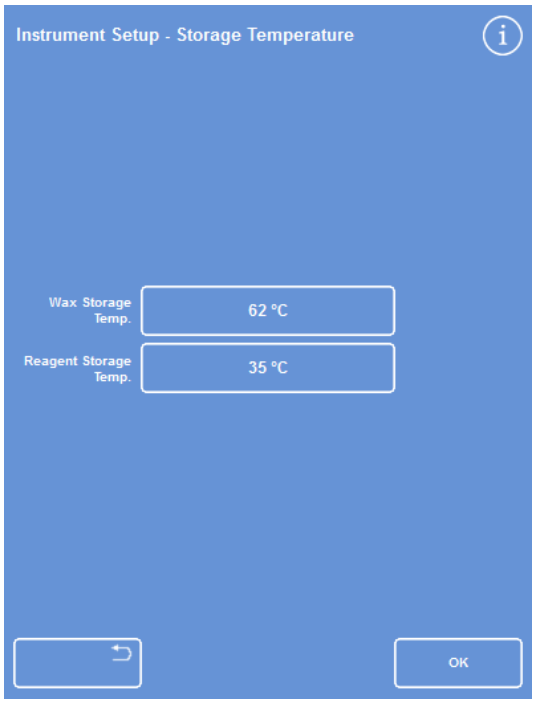

Defining reagent storage temperature

The Storage Temperature - Set Reagent Storage Temperature screen appears showing the reagent storage temperature of ambient or 35°C.

Setting Use Limits

Revos tracks the usage of fixatives, filters and flush reagents and provides visual warnings when these need to be changed or renewed on the Quality Control screen. Refer to Quality Control Checks and Reagent, Wax and Filter Checks for more information.

Use limits should be set before you start processing. They can be changed later, as required.

Note

The renewal of the infiltrant and concealed processing reagents are managed automatically by the system based on the default setting for alcohol quality. If you want to change the way in which these reagents are renewed, refer to Trigger for Reagent Rotation.

To set use limits:

- Select Options > Instrument Setup > Reagent Use Limits.

  The Instrument Setup – Reagent Use Limits screen appears.
- Press each reagent / filter button in turn, define the required use limit using the number pad and press OK.
- To turn the use limit off, set the value to zero (0). The use limit is then displayed as Off.
- When you have defined all the use limits, press OK to save and return to the Instrument Setup – Reagent Use Limits screen.
- To return to the Main Screen, press OK repeatedly.

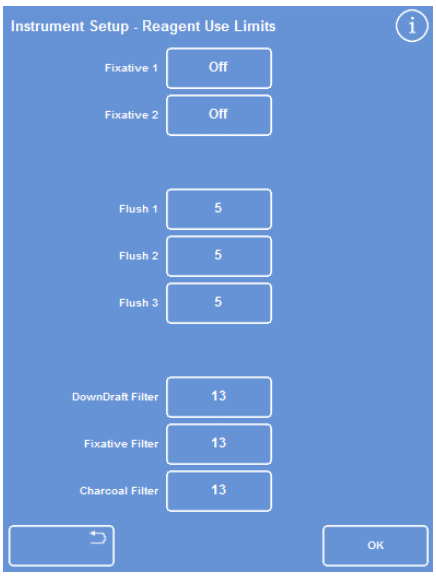

The Instrument Setup - Use Limits screen

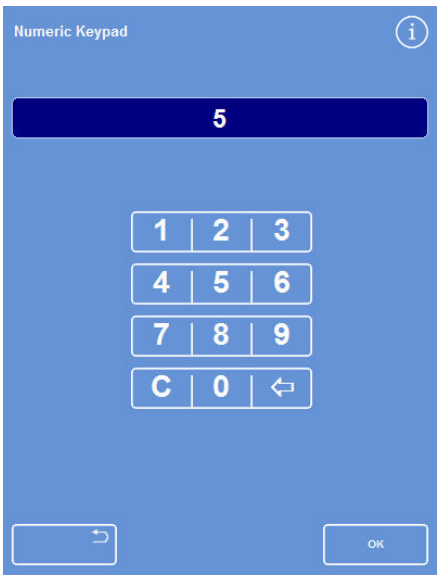

Setting use limits

Note

The use limit for the filters is measured in weeks. The default is 13 weeks.

Filters can be set to 0 if the Vent Adaptor kits are to be used.

The flush reagents can only be set from 1 to 10. The default is 10. The use limit for a flush cannot be turned off.

Loading Reagents

Before you can process specimens, you must load Revos with the required processing reagents. The names of the reagents that you intend to use are defined using the **Reagent Names** option (refer to Defining Reagent Names).

When you load reagents, Revos will guide you through the loading procedure to ensure that the required reagents are loaded into the correct cabinet positions. You must then insert the colour-coded reagent tubes (with evaporation cap) and confirm that the required reagents have been loaded into the appropriate positions in the Reagent Storage Area.

Reagents must be loaded in the following order:

1. Wax
2. Flush (cleaning) reagents
3. Dehydrants
4. Clearants

Fixatives are loaded from the Quality Control screen; you will be prompted to load these when you start a processing run for the first time.

Refer to the Safety Data Sheets when handling all reagents used with the instrument. For a full list of approved reagents, refer to Appendix D – Approved Reagents.

RFID – Radio Frequency Identification

RFID stands for **Radio-Frequency Identification**. The acronym refers to small electronic devices that consist of a small chip and an antenna. The chip carries data that can be unique for the chosen application.

The RFID device serves the same purpose as a bar code or a magnetic strip on the back of a credit card or ATM card; it provides a unique identifier for that object. Just as a bar code or magnetic strip, must be scanned to get the information, the RFID device must be scanned to retrieve the identifying information.

RFID Machine Setup

- To use the RFID system for loading and unloading of reagents you need to ensure that the option is enabled (WM enabled). Press '**Options, Instrument Setup, Customisation**'.

Note

This will instruct the system to integrate the RFID reader as part of the loading and unloading sequence.

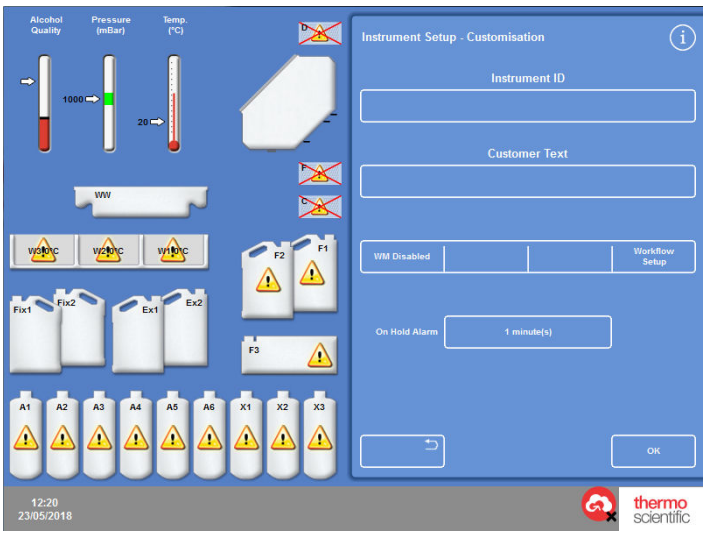

RFID Loading

- Before loading the RFID reagents, ensure that the bottle stop has been fitted to the instrument.

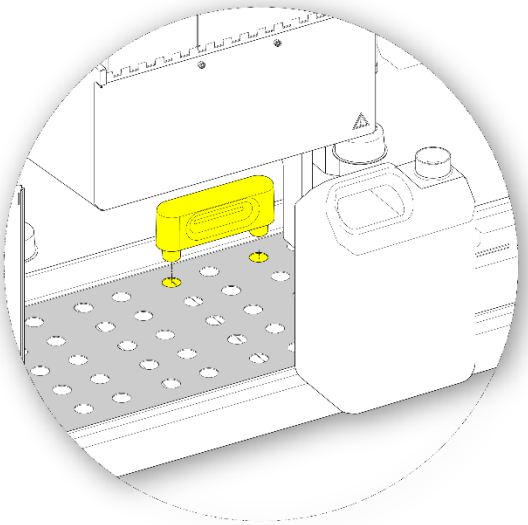

- When loading a reagent the system will ask the user to scan the bottle before it can be confirmed and loaded. The scanner is located on the inside of the left hand door.

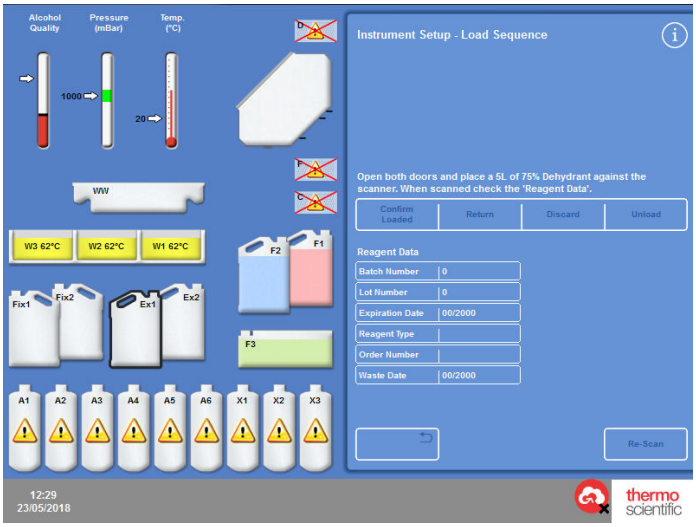

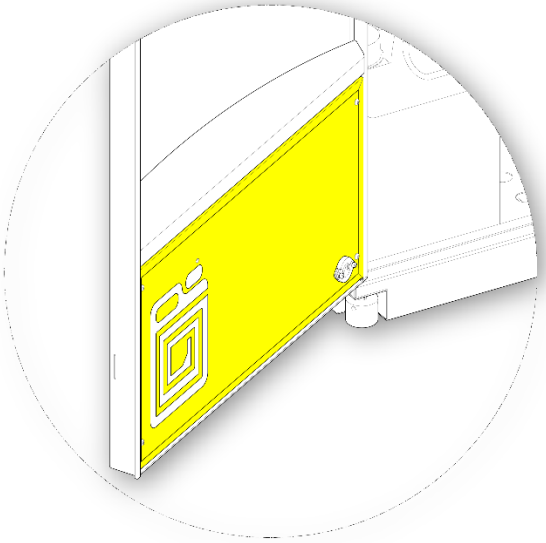

- If the tag data is seen as incorrect a rescan can be performed by pressing the Re-Scan button:

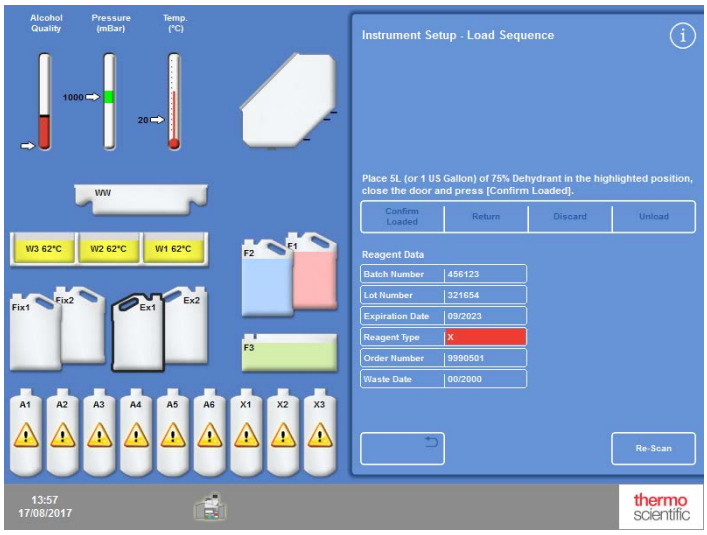

- The Confirm Loaded button will remain disabled until a successful scan has occurred and both doors are closed on the reagent storage area.

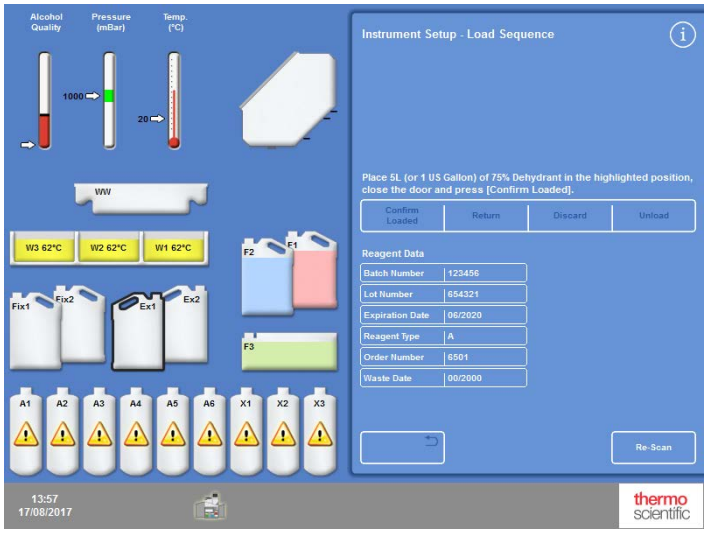

- Once the loading has completed the user will be instructed to scan the next bottle to progress with the loading sequence:

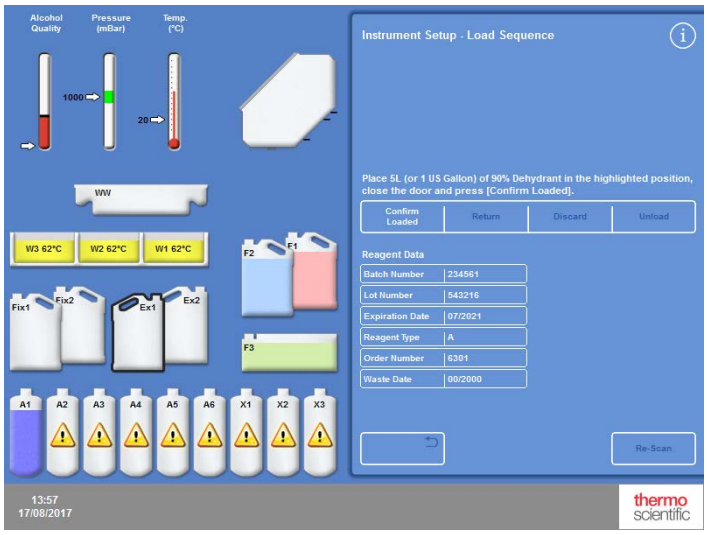

RFID Specific Reagent Inspection

- To load after a reagent has been discarded in the inspect screen, the destination bottle needs to be selected. **Quality Control, Inspect Reagents**.

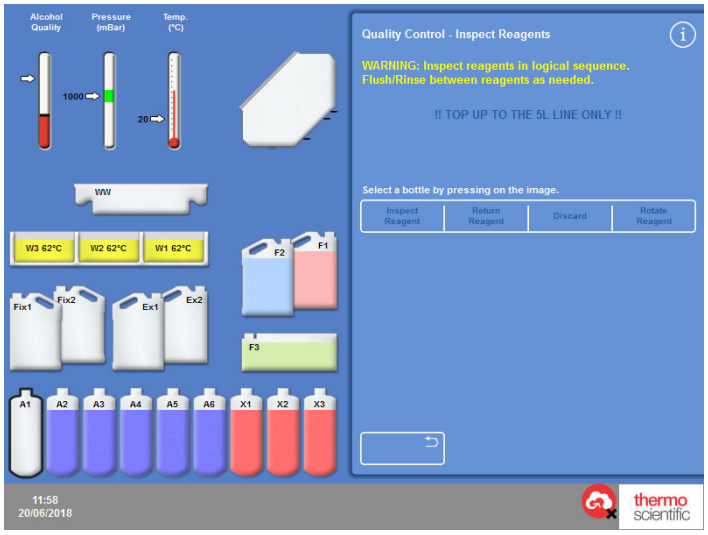

Note

Pressing the Load Reagent button starts the process.

Note

When reloading bottles A1, A2 and A3 ensure that correct dilutions have been carried out. Please refer to [Loading Dehydrants section.]

- When loading a reagent the system will request the bottle be scanned before it can be confirmed and loaded.

- Open both doors
- Scan bottle on left door
- If bottle is incorrect can be re-scanned or new bottle re-scanned
- Place bottle in appropriate position (Ex1 or Ex2)
- Close both doors, confirm button will become available if tag data OK the reagent will be loaded.

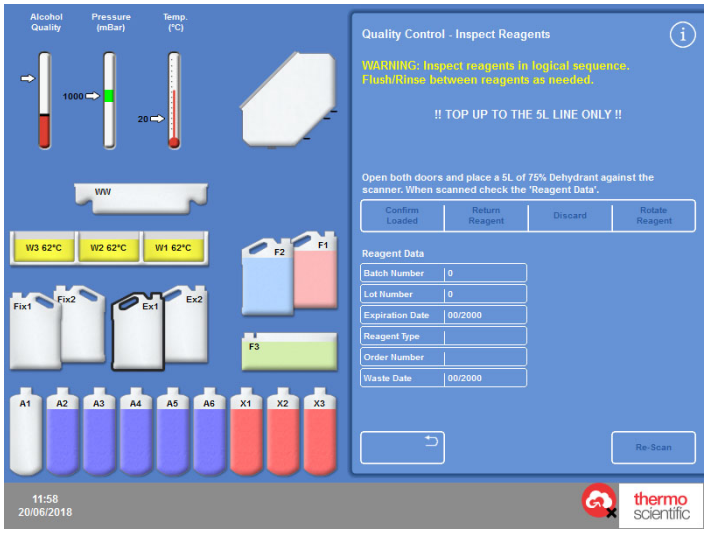

- If the tag data is seen as incorrect a rescan can be performed by pressing the Re-Scan button.
- If the scan is incorrect the instrument will make a 'Bong' sound.
- If a BONG is generated the user will need to either move the bottle to get it into the correct position or adjust the door to be closer to the bottle.

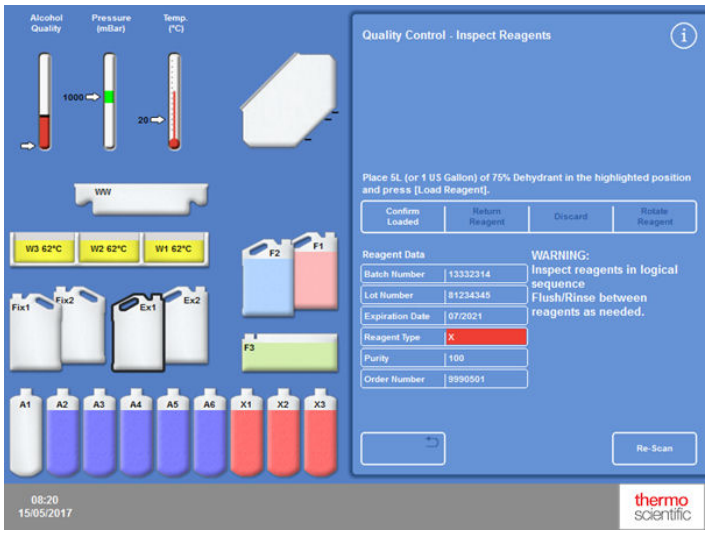

- If the scan is correct the instrument will make a 'Bing' noise.
- The Confirm Loaded button will become enabled after a successful scan has occurred and both left and right doors are closed.

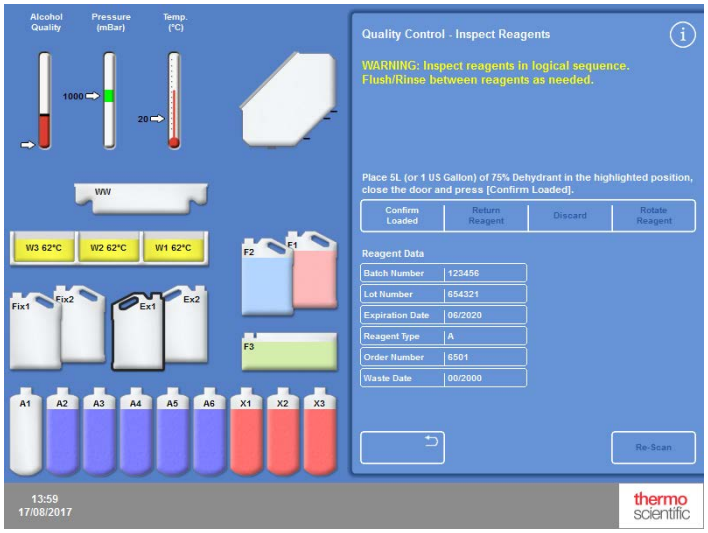

- Once the reagent is confirmed as being correct and the doors are closed, the transfer begins.

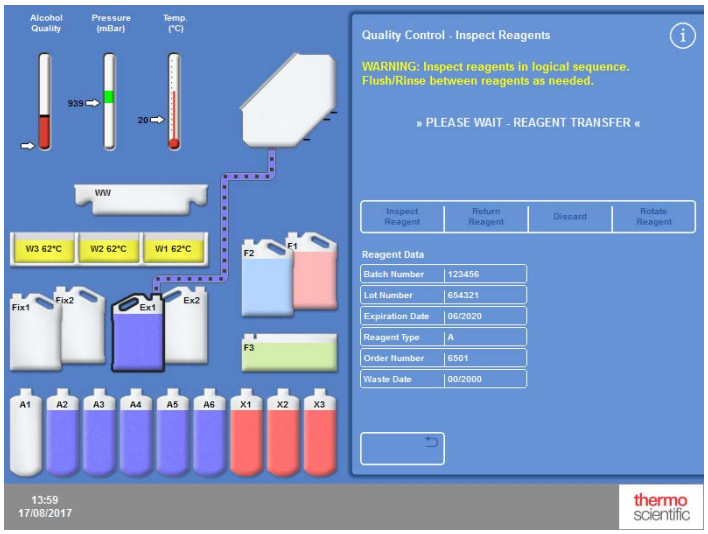

- Once loading is complete the system is then ready to inspect/discard any other reagents in the system.

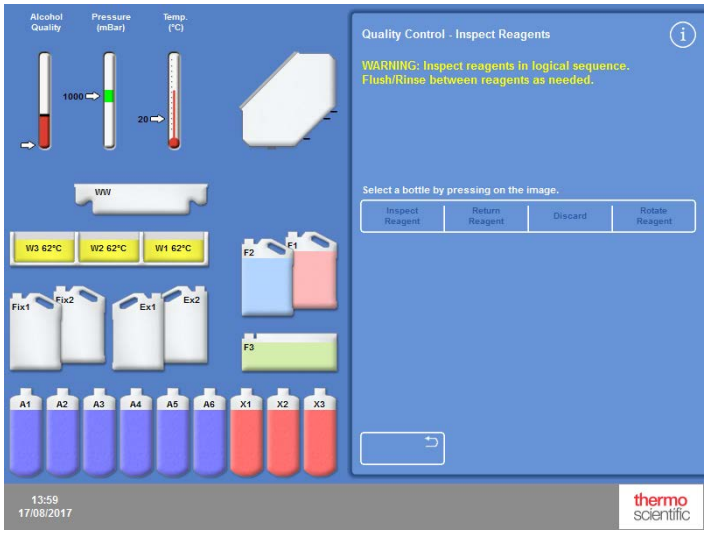

The Reagent Storage Area

Make sure that you familiarise yourself with the positions of the reagents in the Reagent Storage Area and the colour-coded reagent tubes. The tubes are flexible and can be moved as required to ensure that the tubes fit into the correct reagent container. If you rotate a tube, ensure that it is rotated back to avoid damage or leaks.

When positioning reagent tubes ensure that each pipe is:

- Free of any surface contamination.
- Fully inserted in the relevant bottle and not bent, twisted, kinked or at an angle.

  This diagram shows the colour of the tube for each reagent position:

  Green = water based

  Blue = alcohol

  Red = xylene / clearant

Note

There is a viewing window in the back panel to view the reagent levels in the back bottles.

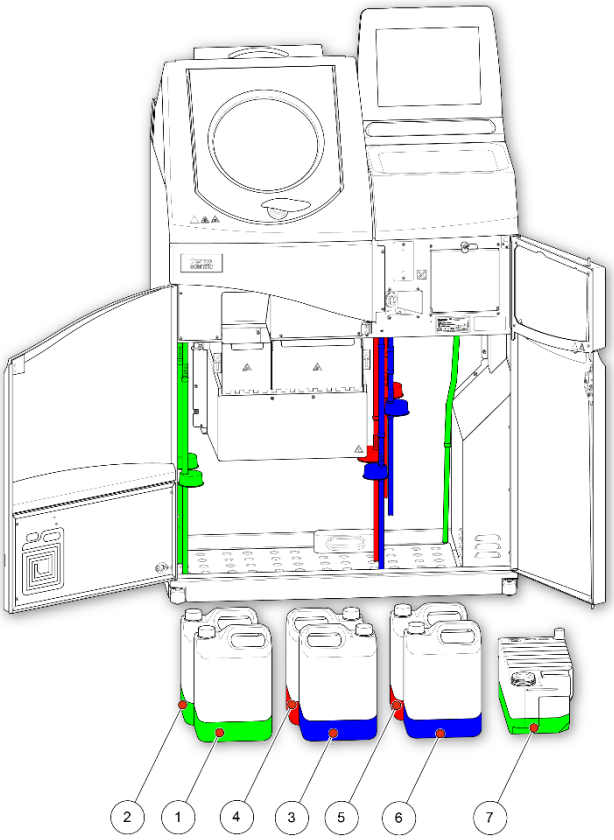

1	Fixative 1 (Fix1)	5	Flush 1 (F1)
2	Fixative 2 (Fix2)	6	Flush 2 (F2)
3	Exchange 1 (Ex1)	7	Flush 3 (F3)
4	Exchange 2 (Ex2)		

Running the Load Sequence

The Load Sequence takes you through the steps that are required to load reagents into Revos in the correct sequence.

Ensure that you load the correct reagent and concentration at each step; the instrument cannot check that the correct reagents are loaded unless the RFID system is enabled. If this is enabled the alcohol and xylene will be identified, refer to the RFID Load section.

To initiate the Load Sequence:

- Select **Options** > **Instrument Setup** > **Load Reagents** to display the Instrument Setup - Load Sequence screen.

  Wax bath W1 is highlighted on the display, ready to be loaded:

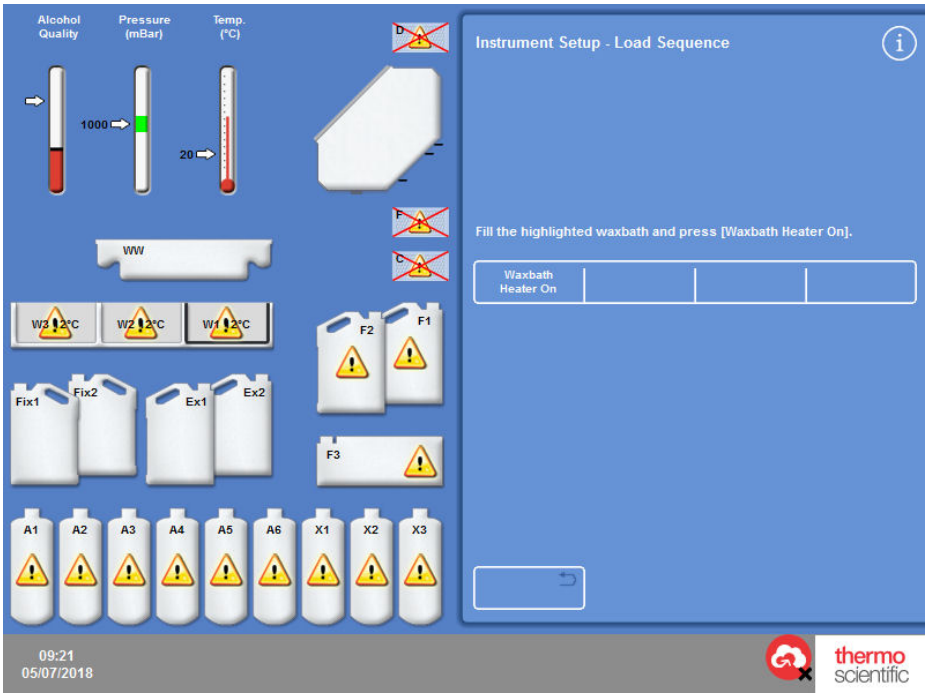

Starting the Load Sequence

Note

Once reagents are loaded and you have completed the Load Sequence, you will not be able to run the ***Load Reagents*** *option again, unless you unload the reagents first. For more information, refer to Unloading Reagents.*

You will not be able to run programs unless all reagents are loaded. If you try to do this, you will be prompted to load reagents.

Once the Load Sequence has started you will not be able to Exit the screen until the loading has completed.

Loading Wax

Wax loading comprises these steps:

- Filling the three wax baths with wax pellets.
- Starting the wax heaters.
- Fitting an empty, consumable waste wax tray and lid.

To load wax:

- Open the instrument's main doors.
- Lift the spring-loaded locking levers and open the two wax doors.

  The right-hand wax door (W1 and W2) opens fully; the left-hand wax door (W3) opens to 45°.
- Starting from the right, fill each wax bath with wax pellets.

  Use 4.2 kg of wax pellets per chamber to give 5.6 litres of molten wax.

Note

Ensure that the wax pellets are evenly distributed in the wax bath – push them towards the back if necessary.

The wax bath can be filled to within a few millimetres from the top of the dividing wall – the pellets melt to the final, lower level within 4 to 6 hours. Take care not to spill any wax pellets.

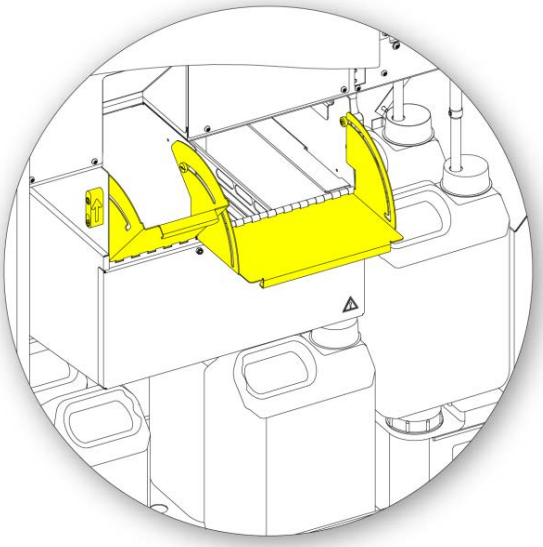

Opening the wax bath doors

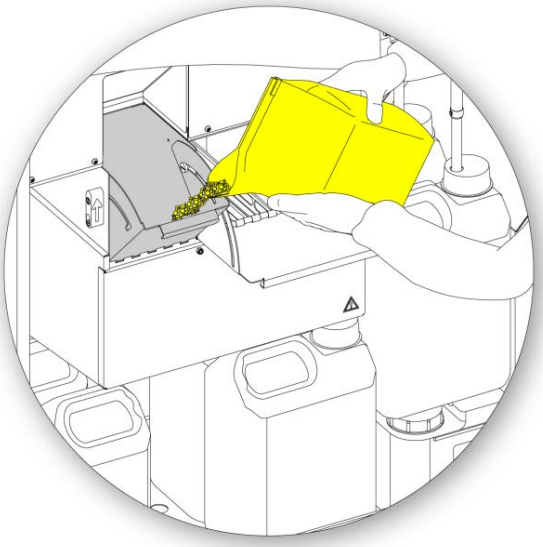

Filling the wax bath

There is a risk of skin burns from molten wax.

Do not fill the Revos wax baths with molten wax. Use wax pellets only.

To start the wax bath heaters:

Note

Before starting the wax bath heaters, make sure you have filled each wax bath with wax.

- On the Instrument Setup - Load Sequence screen, press **Wax Bath Heater ON** to switch on the wax bath heater and melt the wax pellets in wax bath W1.

  Wax bath W1 is now shown filled in yellow on the screen and wax bath W2 is highlighted.

- Press **Wax Bath Heater ON** to heat the wax in W2 and repeat for wax bath W3.
- When the wax has melted, ensure that the level is correct. The maximum and minimum levels are clearly marked in each wax bath.

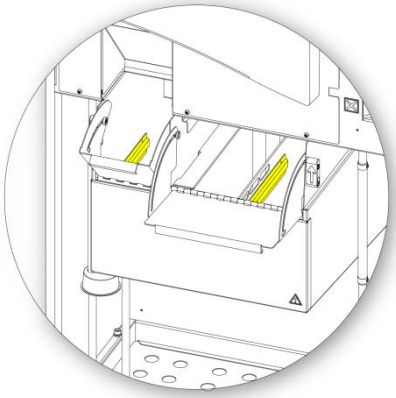

Maximum and minimum wax levels

To fit a consumable waste wax tray and lid:

Note

Do not reuse waste wax trays.

- Ensure that a lid is fitted securely to the consumable waste wax tray.
- Slide the tray into position above the right-hand wax baths.

  You may have to wait until the wax has started to melt to fit the waste wax tray into position correctly.

- Close both wax doors.

Do not heat the waste wax tray to above 65°C.

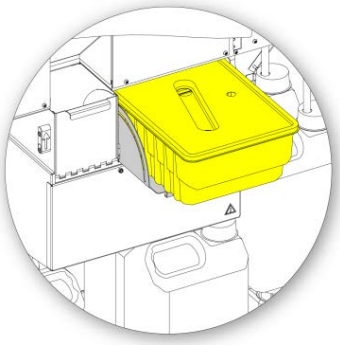

Fitting the waste wax tray above W1 and W2

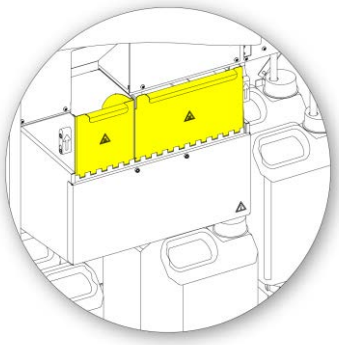

Closing the wax bath doors

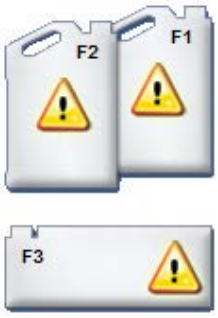

F3 highlighted

- You can now move on to load the other reagents into the instrument.

  The first of the flush (cleaning) reagents (F3) will be highlighted on the screen ready to be loaded.

Loading Flush Reagents

Flush (cleaning) reagents are used to clean the Reaction Chamber between processing runs and also as part of the reagent loading process. New clean reagents must be loaded in the following order:

- F3 (water)
- F1 (xylene)
- F2 (alcohol)

For details of approved flush reagents, refer to Appendix D – Approved Reagents.

Do not use xylene or xylene substitute as the third flush reagent.

Note

Ensure that the colour-coded reagent tubes are fully inserted into the bottles before loading. Revos uses the manufacturer's five litre reagent bottles in positions F1 and F2.

After removing reagent bottle caps, keep them in a safe place as they will be needed when the reagent is changed.

The flush reagents in the Reagent Storage Area are located in the following positions:

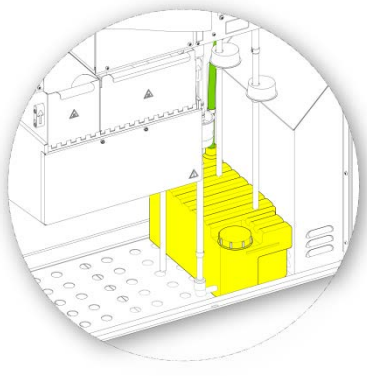

F3 (water)

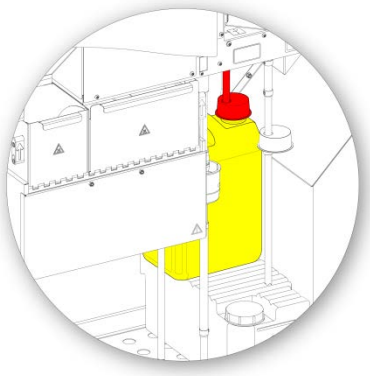

F1 (xylene)

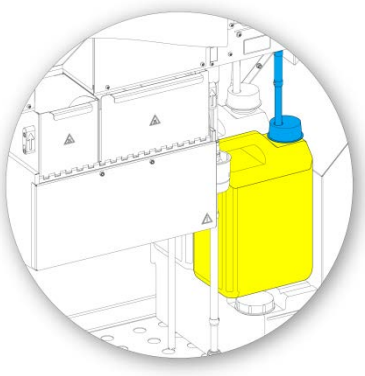

F2 (alcohol)

To load flush reagents:

- Fill the Flush 3 (F3) bottle (supplied with Revos) with water up to the underside of the fill-line and replace the cap securely.
- Install the F3 bottle in the Reagent Storage Area and put the GREEN reagent tube into the bottle.
- Press Confirm Loaded on the Instrument Setup - Load Sequence screen.

  F3 is now shown as full and F1 is outlined on the display.
- Take a new five litre bottle of F1 flush reagent (xylene).
- Place the bottle on top of the F3 bottle, and insert the RED reagent tube (with cap).
- Press Confirm Loaded on the Instrument Setup - Load Sequence screen.

  F1 is now shown as full and F2 is outlined on the display.

- Take a new five litre bottle of F2 flush reagent (alcohol).
- Put the bottle on top of the F3 bottle, in front of bottle F1, and insert the BLUE reagent tube (with cap).

- Press **Confirm Loaded** on the Instrument Setup - Load Sequence screen.

  F2 is now shown as full and you are prompted to press Start to prepare the Reaction Chamber so that dehydrant and clearant can be loaded into the concealed bottles at the back of the instrument.

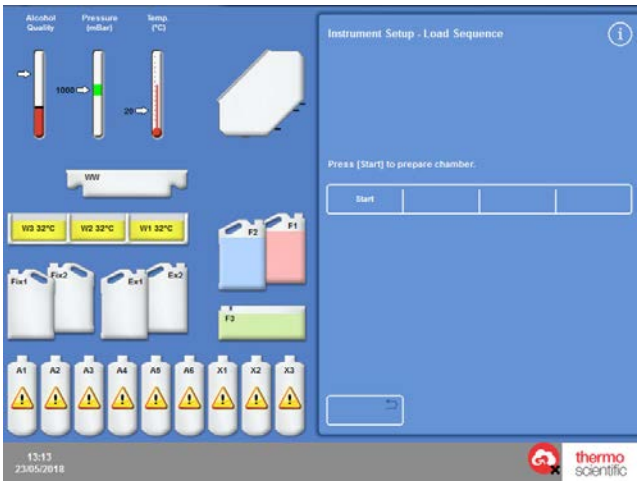

Press Start to prepare chamber

Flushing the Reaction Chamber

The Reaction Chamber must be flushed before dehydrants are loaded into the concealed bottles at the back of the instrument.

To flush the chamber:

- Press **Start**.

  The Reaction Chamber is flushed with flush reagent, F2, followed by flush reagent, F3.

  When the flush cycle is complete, Ex1 and A1 are highlighted on the display.

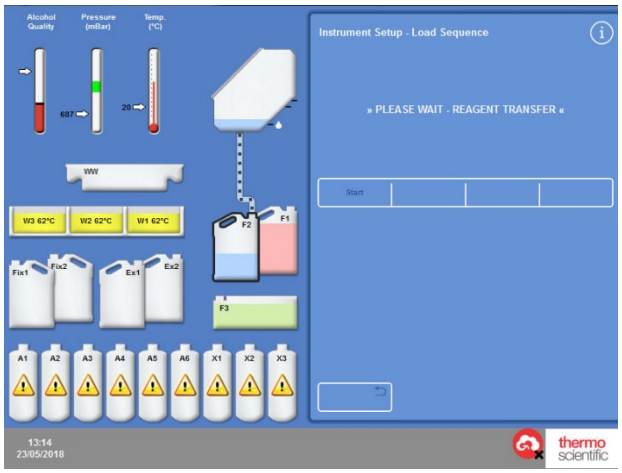

Flush cycle complete, Ex1 and A1 highlighted

Loading Dehydrants

The next step in the Load Sequence is to load the dehydrants into the concealed bottles at the back of the instrument. Various concentrations of dehydrant reagent are required.

Note

If using the RFID system, see relevant pages for information.

Loading dehydrants comprises these steps:

- Place a 5 litre bottle with dehydrant at a specific concentration in the Ex1 position.
- Transfer the dehydrant reagent from Ex1 into the Reaction Chamber and then into the appropriate concealed bottle at the back of the instrument.

To load dehydrants:

- Fill a 5 litre reagent bottle with alcohol diluted to 75%.
- If WM Enabled, scan the RFID tag by placing the bottle by the scanner in the LHS door. Place the bottle in EX1 position and close both doors.
- Confirm Loaded should is then displayed.
- Press Confirm Loaded on the Instrument Setup - Load Sequence screen to load the first dehydrant.

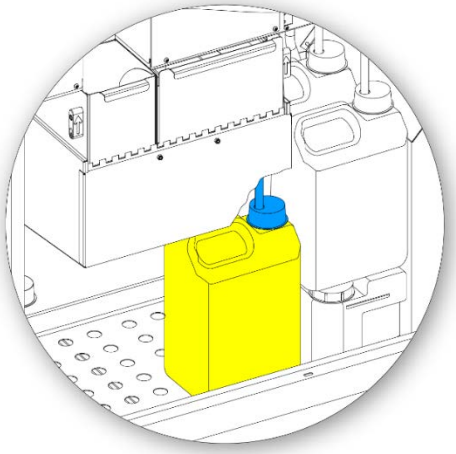

Dehydrant in position Ex1

Note

The instrument will check to see if reagent is already loaded in the concealed bottle.

*If there is reagent present, press **Discard**. Ensure that you place an empty bottle into position Ex1 and press **Unload**. Otherwise, press **Return** to transfer the reagent from the Reaction Chamber into bottle A1.*

- Load the remaining dehydrants. To do this, prepare the following solutions and load them from the Ex1 position into the appropriate concealed bottle. Press Confirm Loaded to confirm the correct reagent is in the Ex1 position before loading.
    - A2 = 90% alcohol
    - A3 = 95% alcohol
    - A4–A6 = 100% alcohol

  When all of the dehydrants have been loaded, Ex2 and X1 are highlighted on the display.

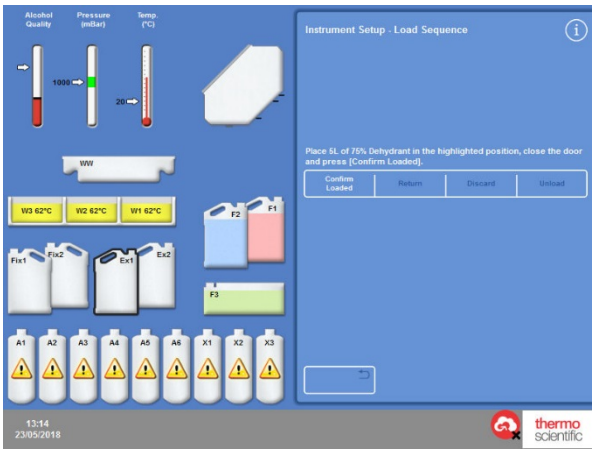

All dehydrants loaded, Ex2 and X1 highlighted

Loading Clearants

Once the concealed dehydrant bottles have been loaded, you will be prompted to load clearants.

Loading clearants comprises these steps:

- Place a bottle of clearant in the Ex2 position.
- Transfer the reagent from the Ex2 position into the Reaction Chamber and then into the concealed clearant bottles, X1, X2 and X3.

To load clearants:

- If WM Enabled, scan the RFID tag by placing the bottle by the scanner in the LHS door. Place the bottle in EX2 position and close both doors.
- Confirm Loaded should is then displayed.
- Press Confirm Loaded on the Instrument Setup - Load Sequence screen to load X1.
- Repeat to load clearant from Ex2 into the concealed bottles, X2 and X3.

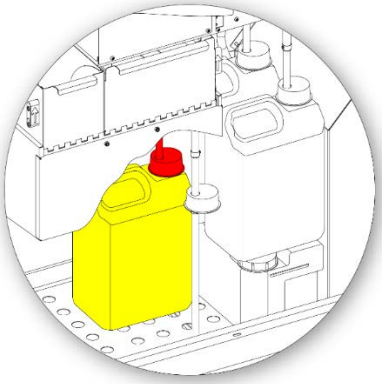

Clearant in position Ex2

Note

The instrument will check to see if reagent is already loaded in the concealed bottle.

*If there is reagent present, press **Discard**. Ensure that you place an empty bottle into position Ex2 and press **Unload**. Otherwise, press **Return** to transfer the reagent from the Reaction Chamber into bottle X1.*

Flushing the Reaction Chamber

When all of the clearants are loaded, you are prompted to start a flush cycle (F2 followed by F3) to prepare the Reaction Chamber for use.

To flush the chamber:

- Press Start.

  When the flush cycle is finished, the Options - Instrument Setup menu is re-displayed.
- Press OK to return to the Options menu and then OK again to display the Main Screen.

  Revos is now ready for use.

Note

The following bottles must be left in position for use when reagents are rotated and discarded:

- *An empty bottle in position Ex2, with the RED tube inserted*
- *An empty bottle in position Ex1, with the BLUE tube inserted*

To prevent reagent evaporation, ensure that the coloured caps are in place over the necks of the flush and fixative bottles.

Loading Fixatives

Fixatives in positions Fix1 and Fix2 in the Reagent Storage Area are not loaded as part of the Load Sequence. Instead, the Quality Control screen is displayed when you attempt to start a process for the first time. This screen will prompt for fixatives to be loaded into positions Fix1 and Fix2 (if Fix2 is to be used).

To load fixatives before this screen is automatically displayed, select Quality Control from the Main Screen.

Note

You do not have to load two fixative bottles into the instrument. However, the processing programs must be amended to indicate that you are only using one fixative step. Refer to Programs and Flushes for more information.

To load fixatives:

- Put fixative bottles in positions Fix1 and Fix2 (if Fix 2 is used).
- Fully insert the GREEN reagent tubes together with the GREEN caps.

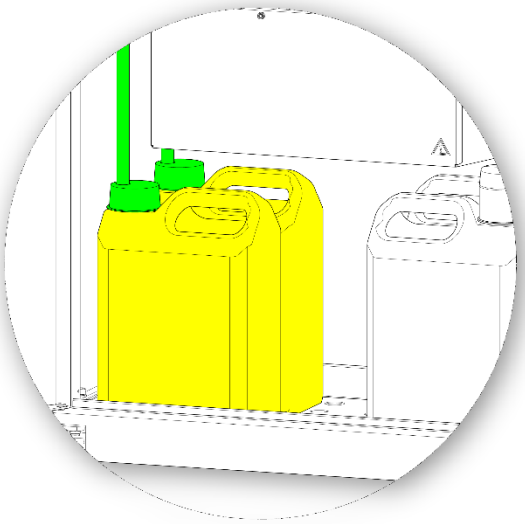

Fixative bottles in position in the Reagent Storage Area

- On the Quality Control screen, press New.
- Press OK to exit from the screen.

The Quality Control screen

Making Additional Changes before Processing

Once you have set the time and date and defined and loaded the required reagents, Revos is ready to process specimens. You may, however, wish to make changes to some of the instrument settings or define your own programs to ensure that Revos operates to meet your requirements.

Some of the things you may wish to specify or change include:

- The preferred end time for overnight processing programs.
- The triggers for reagent rotation.

Refer to Chapter 4 – Advanced Operation for details of the options and settings that can be used to control how Revos operates and processes specimens.

Chapter 3 – Basic Operation

This chapter describes how to process specimens using Revos.

This chapter covers the following subjects:

- Loading specimens into the instrument.
- Starting and monitoring a program.
- Adding additional specimens once a program has been started.
- Stopping or aborting a program.
- Completing a program.
- Running a selected program under user-defined conditions.
- Responding to quality control alerts and renewing processing reagents.

Routine Processing

If you are using Revos to process specimens using the same program each day, then all you need to do is load the specimens into the instrument and start the processing run. The screen that you use to start a program automatically appears when you lift the instrument's lid to load specimens.

Note

*If this screen has been cancelled, just press **Process** on the Main Screen to re-display it and start processing.*

When a run is started, Revos will automatically begin working through the individual steps so that the program completes at the specified end time. For example, if you are processing overnight, you can load specimens into the instrument at any time during the day and then start the program.

Specimens are held in a specified reagent, usually a fixative, until the start time is reached. Revos will then process the specimens overnight so that they are ready for the next stage in your workflow, the following morning, at the specified end time.

Note

If you require more flexibility and need to change some of the program parameters for a specific run, refer to Advanced Processing for details.

Tissue should only be added during the fixative step.

If circumstances require tissue to be added after fixation, follow good laboratory practice.

Loading Specimens

Revos allows you to process up to six baskets of cassettes, at any one time.

Note

For details of the baskets that are available to hold specimen cassettes, refer to Appendix A – Accessories.

Be aware of the samples used. They may pose a biohazard.

Observe Good Laboratory Practice when handling tissue.

Opening the Reaction Chamber:

- Open the Reaction Chamber. To do this, turn the handle anti-clockwise and lift the lid.

  The Reaction Chamber Available screen is automatically displayed:

Note

When the lid is open, fumes are extracted through the downdraft filter above the Reaction Chamber.

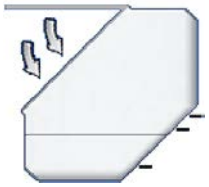

Chamber open, downdraft fan on

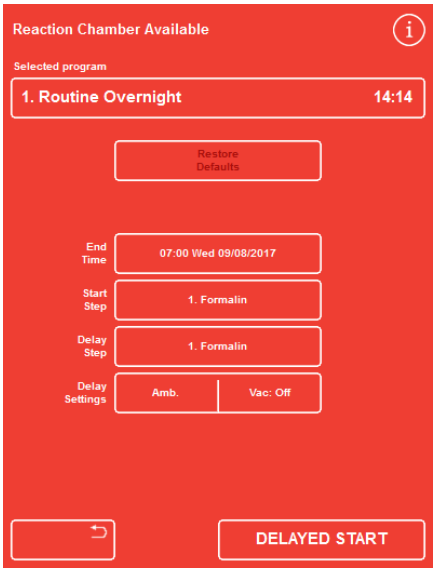

The Reaction Chamber Available screen

Loading Cassettes and Baskets:

- Load the cassettes into the basket.

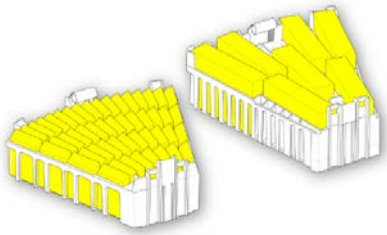

Loading cassettes into Standard and Megacassette Basket

- Fit the lid onto the basket by fitting the two hooks at the front of the lid into the locating holes on the basket.

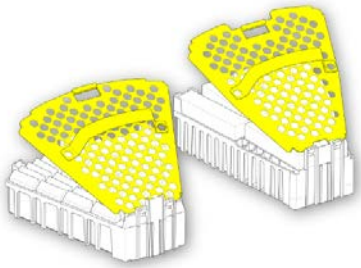

Standard and Megacassette baskets

- Push the lid closed and ensure that it locks in place at the rear of the basket.

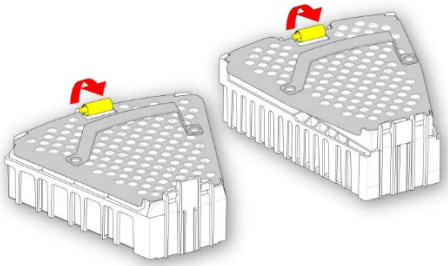

Note

When you load the baskets into the chamber, ensure that the lid of the chamber does not fall onto your hands or fingers.

- Load baskets into the chamber.

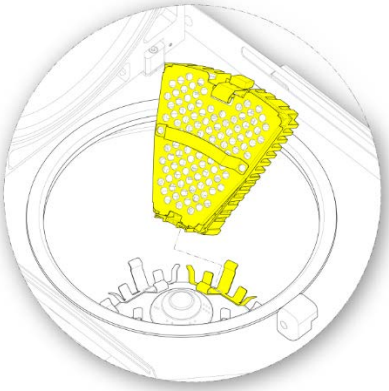

Note

Make sure that the baskets are locked in their positions before closing the Reaction Chamber.

You can check the baskets are located securely by attempting to move them after clicking in place. If they do not move they are secure in place.

- Lock in place the correct location.
- Close the Reaction Chamber lid, ensuring the handle is fully turned to the locked position.

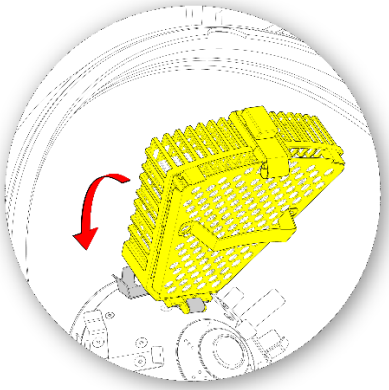

- If less than six baskets are loaded into the instrument, the baskets should be positioned around the whole chamber to balance the chamber whilst in operation.

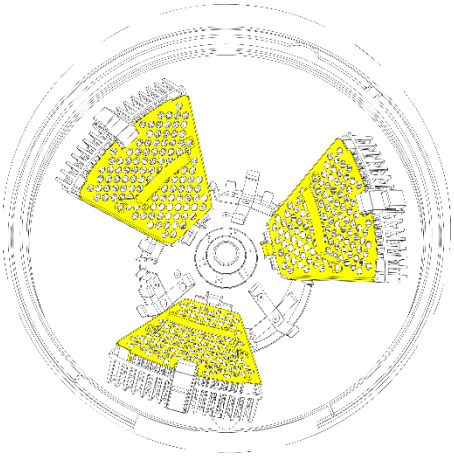

Starting a Program

A program can be started when specimens and baskets are loaded. The program will either start immediately or after a delay in fixative or alcohol. The length of the delay will vary according to the specified end time of the program.

Programs are started from the Reaction Chamber Available screen which is displayed when you open the lid to load samples. If this screen is not displayed, press Process on the Main Screen.

Note

You can add more cassettes once a process has been started. Refer to Adding Specimens for details.

For details of the default process and flush programs installed on Revos, refer to Appendix E – Program Examples.

To start a program:

- Ensure that the selected program is correct.
- Check that the displayed End Time and Start Step are correct.
- If the program uses a delayed start, ensure that the Delay Settings and Delay Step are correct.
- Press IMMEDIATE START or DELAYED START to start the program.

Note

*If you press the back button, rather than the start button, press **Process** on the Main Screen to re-display the Reaction Chamber Available screen and start processing.*

Pressing the back button will lose any changes made to the End Time, Start Step, Delay Step and Delay Settings.

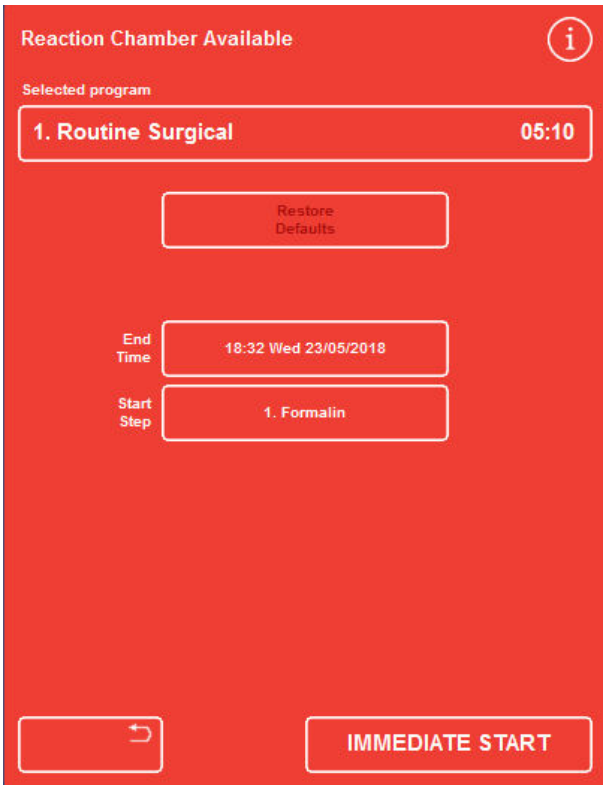

Immediate Start

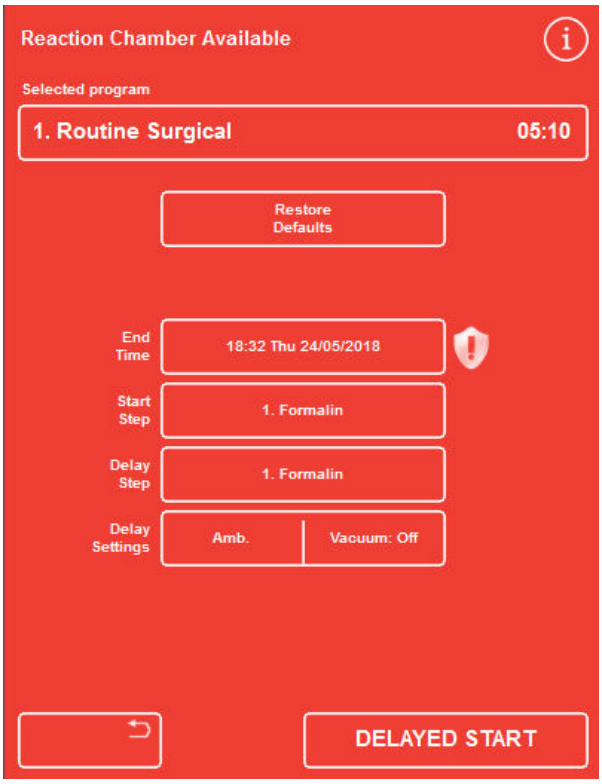

Delayed Start

- Details of the status of the program, such as the current step and time remaining until completion, are displayed on the Monitoring screen which updates as the program moves through its defined steps.

  For additional information, refer to Monitoring a Program.

- If you are running an overnight program with a delayed start, the Reaction Chamber will fill with the delay step reagent and then hold until active processing starts to complete at the specified end time.

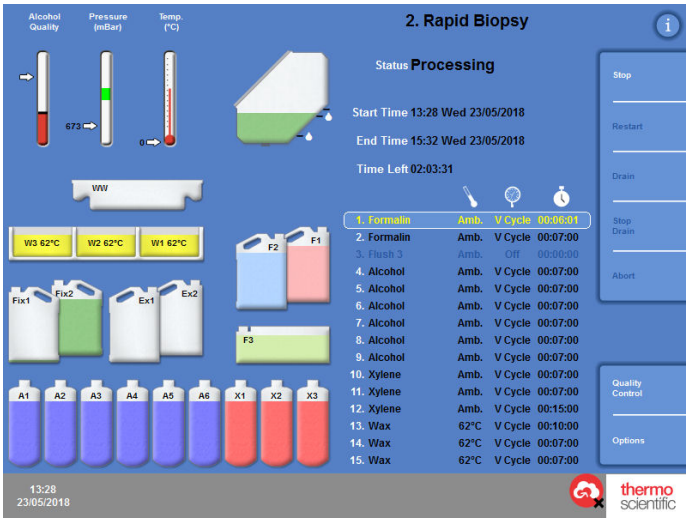

The Monitoring screen

Quality Control Checks

If the Quality Control screen appears automatically when you press the IMMEDIATE START or DELAYED START button, this means a usage limit for a reagent, wax or filter has been reached or that a reagent/wax rotation or replenishment is due.

The program will not start until all issues shown on the Quality Control screen have been resolved. For more information on renewing reagents, wax and filters, refer to Quality Control, Filter and Reagent Renewal Limits.

Instrument Faults

A program will not start if there are faults with the instrument. These will be listed on the Fault Status screen, which is automatically displayed when faults exist and a program is started. The wrench (spanner) icon will also appear at the bottom of the Main Screen. Press this icon to access the Fault Status screen.

For more information on how to respond when the Fault Status screen appears, refer to Using the Fault Status Screen.

Monitoring a Program

The progress of a running program can be viewed on the Monitoring screen. It displays a series of defined steps with the current program status, step position and reagent all indicated.

As the program progresses, the highlighted position moves down through the defined steps. Any steps that have been disabled are shown greyed out on the list.

Fluid transfer between the reagent containers and the Reaction Chamber is indicated by an animated connecting pipe.

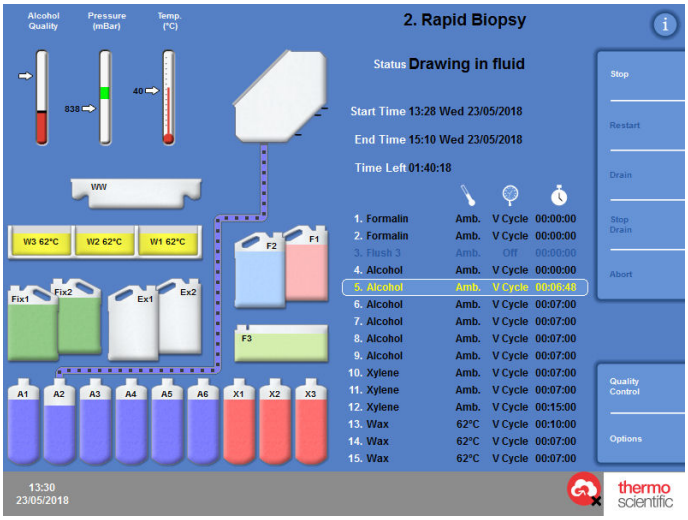

Following the progress of a program

The Monitoring screen shows the following information:

Item	Description
Status	Shows the status of the current processing operation: Lid Check Please Wait: The instrument is checking that the lid is closed. Valve Indexing: The instrument is checking the position of the valve. First Fill – Please Wait: The Reaction Chamber is filling with the first reagent. Drawing in fluid: The Reaction Chamber is being filled with reagent. Processing: The highlighted step is currently running. Draining: The Reaction Chamber is draining. Stopped: The process has been stopped using the Stop button. Aborting process: The process has been stopped and then aborted using the Abort button. Waiting for wax: The wax has not reached the correct temperature. Process complete: The program has completed. Lid released The Reaction Chamber lid is released and can be opened.
Start Time	The time (and date) that the program was started.
End Time	The time (and date) that the program will end. Immediate Start: Based on the total time and the start time. Delayed Start: Based on the total time and the preferred end time. Refer to Setting the Workflow Processing Options.
Time Left	The time remaining before the program completes.
Reagent	The reagent used for each step in the selected program.

Item	Description
Time	The time for each step in the selected program. If the start is delayed, the time in the delay reagent will be adjusted to ensure that the program completes at the specified end time. When a step is currently highlighted and running, the time value indicates the time left before the step completes. When a step has completed, the time displays as 0:00.
Delay/Step Temp	The usage temperature for the program or flush step. This can be different from the storage temperature. Note *Reagents cannot be cooled.*
Vac	The vacuum conditions in the Reaction Chamber during each step. Three settings can be indicated: Off: Specimens are held at atmospheric pressure. On: Specimens are held at approximately 600 mbar absolute (400 mbar below atmospheric pressure). V Cycle: Specimens are held in a 15 minute, vacuum to atmospheric cycle that ranges from approximately 600 mbar absolute (vacuum conditions) through to atmospheric pressure. P Cycle Specimens are held in a 10 minute, vacuum to pressure cycle that ranges from approximately 600 mbar absolute (vacuum conditions) through to 1200 mbar absolute (pressure conditions)

Adding Specimens

Additional tissue cassettes or baskets can be added after a program has started.

Tissue should only be added during the fixative step.

If circumstances require tissue to be added after fixation, follow good laboratory practice.

Note

The downdraft fan starts automatically when the lid handled is turned. This draws reagent vapours away from the Reaction Chamber.

It is not possible to open the lid if the Reaction Chamber is under vacuum; check the Pressure Gauge is in the green range before attempting to open the lid.

To add additional specimens or baskets:

- Open the Reaction Chamber lid.
- Add cassettes or baskets, and then close the lid.

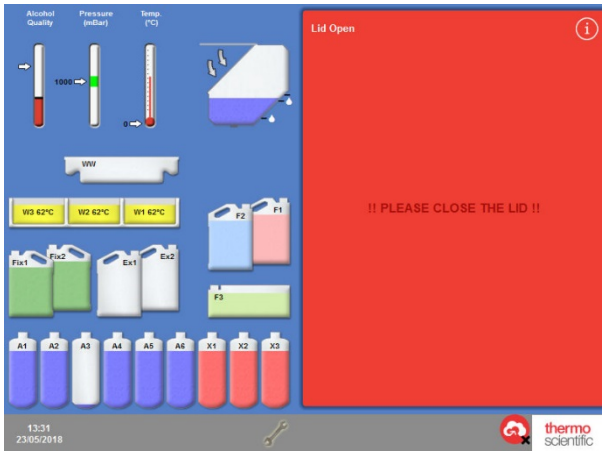

Lid released and opened, the Processing screen is displayed

Note

If there is reagent in the chamber when you open the lid and you want to add more specimens or baskets, you can close the lid and the reaction chamber will rotate slowly. To stop the chamber from rotating at the desired location simply open the lid and the chamber will stop rotating immediately.

Note

If you forget to restart the program, the On Hold Alarm will sound after the specified elapsed time.

For more information about the alarms that can be set, refer to Using Audio and Remote Alarms.

- If you do not add more baskets to the Reaction Chamber, just close the reaction chamber lid and press restart.

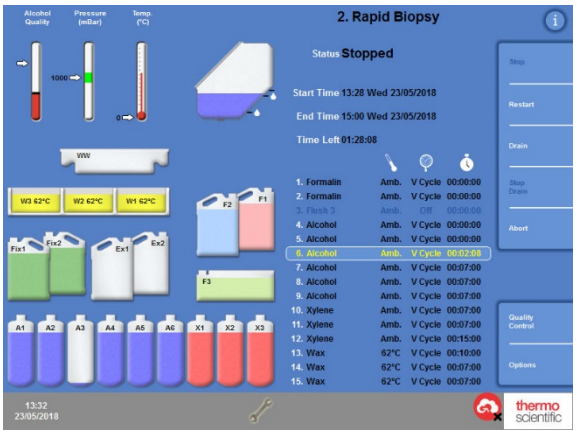

Lid closed, ready to restart processing

Stopping a Process

If required, a program can be stopped. When processing has stopped, different buttons appear on the right of the Monitoring screen allowing you to:

- Drain the Reaction Chamber.
- Restart the step.
- Abort the entire program (for more information, refer to Aborting a Program).

Note

You cannot stop a program when the status is shown as 'Draining'. Only actively running programs can be stopped. If a program that is in a delay step is stopped, the time remaining will continue to decrease, however the program will not progress any further.

To stop a program:

- Press the **Stop** button.

  The Status changes to 'Stopped' and the following buttons appear under the Quality Control and Options buttons:

- Drain All
- Restart
- Abort

To drain the chamber:

- Press the **Drain** button to empty the chamber.

  The instrument checks the status of the lid and then drains fluid from the chamber. To stop the draining process, press the **Stop Drain** button when it appears.

Note

*To continue processing, refill the chamber and restart the step using the **Refill and Restart** button.*

The instrument checks the status of the lid, draws in fluid then resumes processing if the lid is closed.

To restart a processing step:

- Press the **Restart** button.

  The instrument checks the status of the lid and then resumes processing if the lid is closed.

Aborting a Program

If a program has been started in error, it can be stopped and then aborted.

To abort a program:

- From the Monitoring screen, press **Stop** to stop the active program.
- Press **Abort**.

  After checking the lid, the status is shown as 'Aborting process'; the program is aborted, the Reaction Chamber is drained and the Main Screen appears.

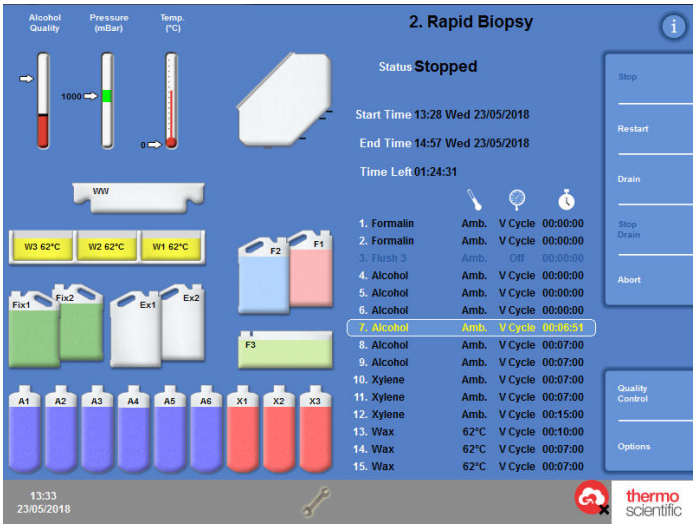

Aborting process

Completing a Program

When processing has completed, the Process Complete screen is displayed.

You must then:

- Drain the Reaction Chamber and remove the baskets.
- Wipe away excess wax from the Reaction Chamber, lid and seal and flush the Reaction Chamber.

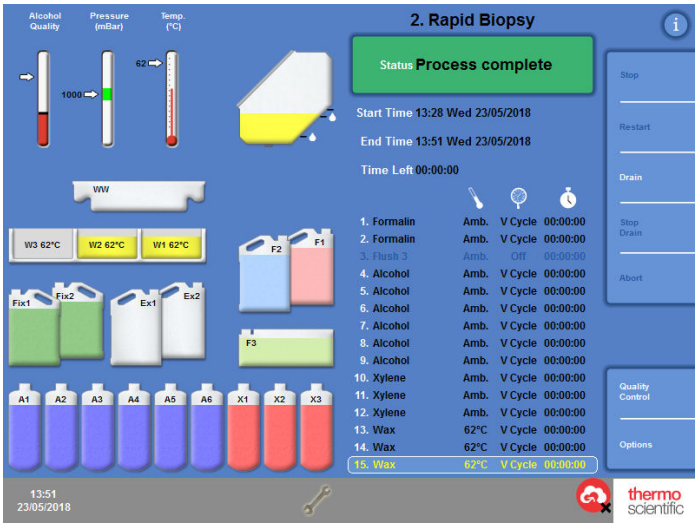

The process is complete

Be careful, baskets may be hot when you remove them from the Reaction Chamber.

Always use the handle of the basket lid.

Avoid spilling residual reagent or wax onto the instrument's surface or onto the floor when removing baskets from the Reaction Chamber. Use tray supplied with instrument if required.

Draining the Reaction Chamber

To drain the chamber:

- Press **Drain**.

  Wait until draining stops and the red Process Complete screen appears.

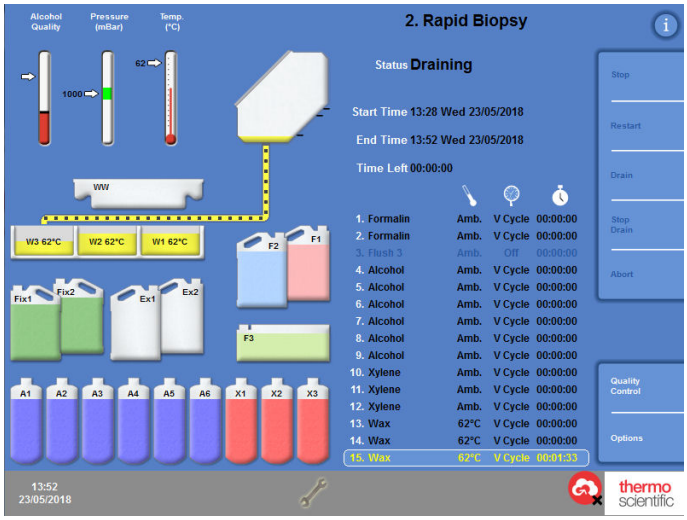

The Draining Screen

- Open the lid and remove the baskets.

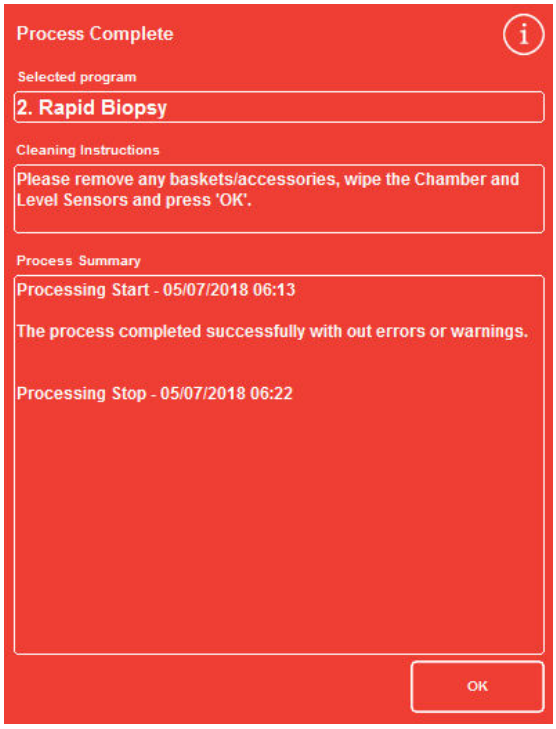

Process Complete

Cleaning the Reaction Chamber

Use clean, dry absorbent paper to wipe the Reaction Chamber after each processing run. This should be done before the flush cycle is started.

Note

Flush reagents will clean more effectively if residual wax is removed from the chamber and baskets before a flush is carried out.

To clean the Reaction Chamber:

The lid seal and top surface of the Reaction Chamber must be kept clear of wax for the instrument to operate correctly.

The lid seal cannot be removed for cleaning. Do not try to remove it.

- Open the lid and use the plastic spatula provided to remove any solidified wax from the lid, top and sides of the Reaction Chamber.
- If necessary, wipe the surfaces of the Reaction Chamber with absorbent paper.
- Use absorbent paper to gently wipe the three level sensors in the Reaction Chamber.

Cleaning recommendations

During cleaning, observe the following recommendations to avoid damaging the instrument:

- Do not use abrasive cleaners other than those provided with the instrument.
- Do not use metal tools to clean or scrape the Reaction Chamber.
- Do not use any chemicals other than those recommended in Appendix D – Approved Reagents.
- Do not scrape around the edge of the Reaction Chamber base. If any debris falls into this gap, carefully use forceps to remove it.

Flushing the Reaction Chamber

The Drain Complete screen

When the baskets have been removed from the Reaction Chamber and the reagent has been drained, the Drain Complete screen is displayed.

This screen prompts you to wipe the Reaction Chamber and level sensors and then flush the Reaction Chamber before starting the next process.

It is important to wipe the Reaction Chamber with clean, dry absorbent paper after every flush and to check for any contamination. Evidence of wax may indicate that the flush reagents need to be changed.

The Drain Complete screen

Note

If you do not flush the chamber you will not be able to start a new process run. Ensure that you flush the chamber between processing runs.

To ensure a thorough flush make sure you fit the baskets into the chamber in order for the flush to reach the whole chamber.

To flush the chamber:

- To run a different flush program than the one selected, press on the name of the selected flush and choose the one that you want to run from the list.

Note

After wax has been used, the instrument will make you run a standard or extended flush; it is not possible to set up a shorter flush.

- Press START to start the selected flush program.

  The progress of the flush program is displayed on the Monitoring screen. Once the flush has completed, the Flush Complete screen is displayed.

- Follow the on-screen instructions and Press OK.

  The instrument is now ready to process the next batch of specimens.

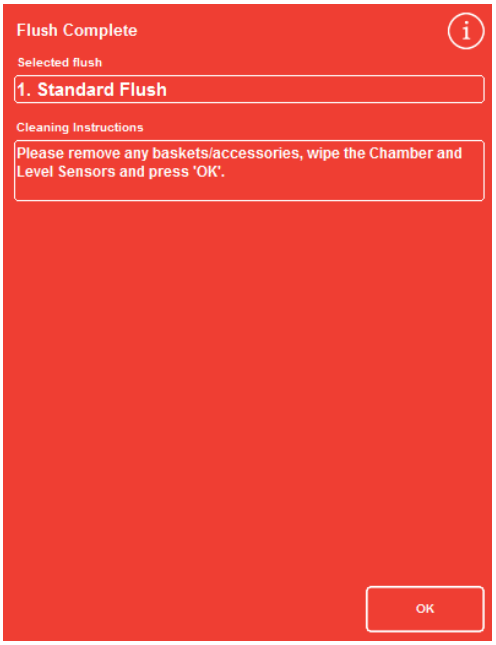

The Flush Complete screen

Note

An 'Extended Flush' should be run in the following situations:

- The first flush after the flush reagents have been renewed.
- If a xylene substitute reagent is used.

Flushing the Instrument

A separate flush function is available that can be used to run flush cycles outside of routine processing, as required.

If the Process button is not displayed on the Main Screen, you must run a flush program using the Flush button before you can start a new processing run.

To flush the instrument:

- From the Main Screen, press Flush.
- To run a different flush program to the one automatically selected, press on the name of the selected flush and choose the one that you want to run.
- Press START to start the selected flush program.

Advanced Processing

If you are running specimens through a specified program on a routine basis, there is no need to change any of the program parameters.

If you require more flexibility, use the Reaction Chamber Available screen before processing your specimens. From here you can select a different program, change the end time, starting step or delay settings.

Note

Any changes that you make to the parameters for a selected program apply only to the current processing run and are not saved.

Selecting a Program

Revos can be configured to automatically select a default program on opening of the reaction chamber lid. The program can be different depending on the time of day (refer to Setting the Workflow Processing Options). Other programs can be selected, as required.

Note

If no default programs are defined (for example, within research laboratories), the Select a Program screen is displayed when the lid is opened. This allows operators to choose the required program by pressing the appropriate program button.

To change the currently selected program:

- On the Reaction Chamber Available screen, press the name of the Selected program: this will then give a list of available programs as detailed on the next page.

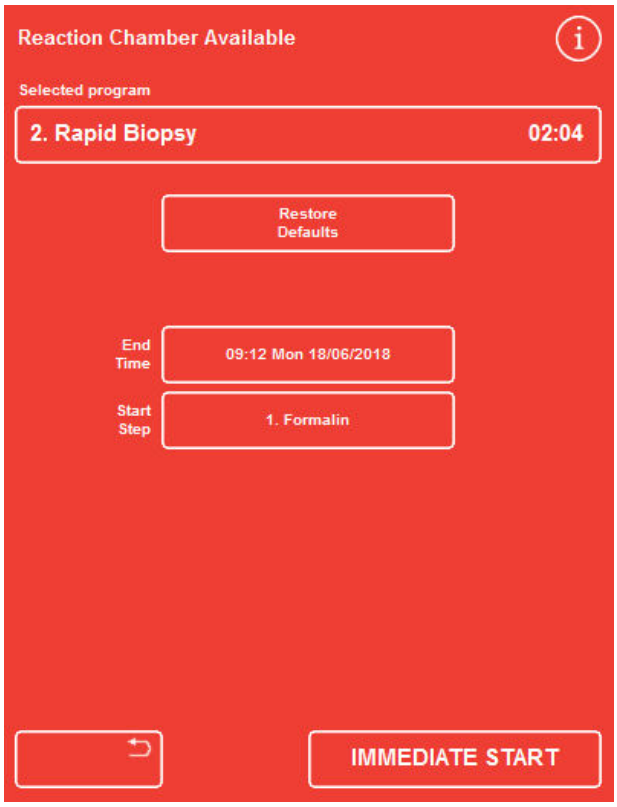

Changing the selected program

A list of available programs is displayed on the Select a Program screen:

The currently selected program is shown in yellow.

- Select the program you want to run and then press OK.

  The selected program is displayed on the Reaction Chamber Available screen.

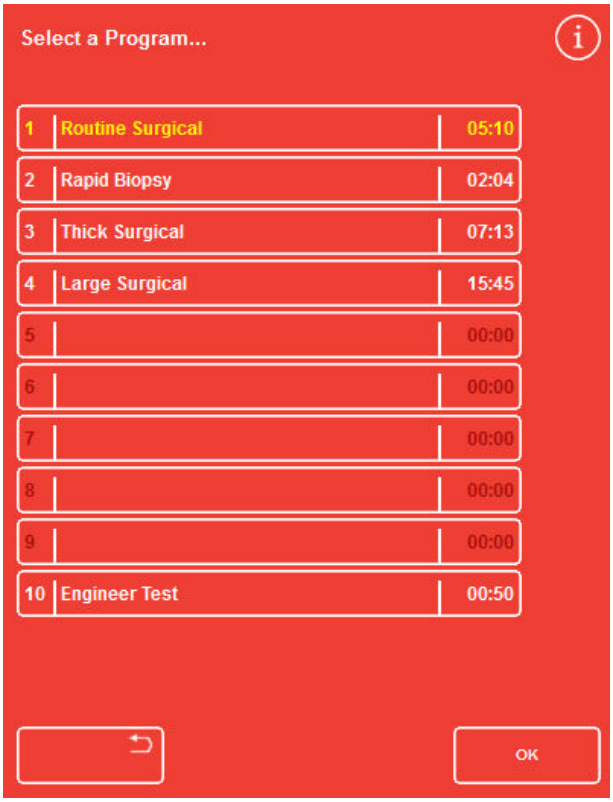

The Select a Program screen

Changing Program Parameters

Once you have selected the required program, you can either start the program or make changes to some of the available parameters before doing so.

Note

If you make any changes to the default parameters for a selected program, a warning symbol appears next to the changed parameter. This is for information purposes only and the program will still run when it is started.

- To reset the parameters back to the default values, press Restore Defaults.

Note

The Restore Defaults button only appears if changes have been made.

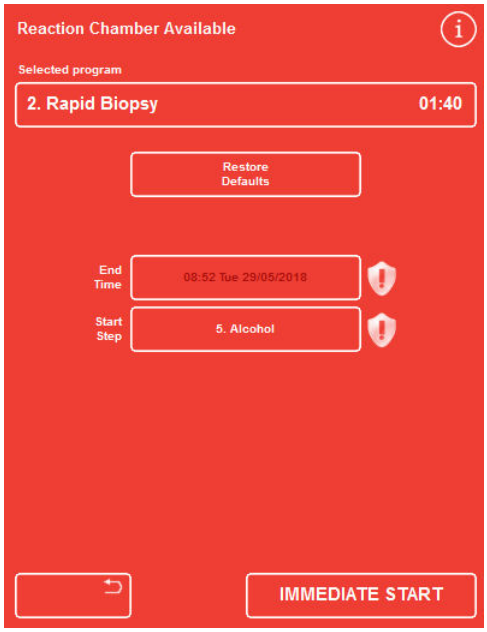

End Time has been changed - Restore Defaults button is enabled

Adjusting the End Time

The end time for a program can be changed to a different time or day, as required. The start time will then adjust so the program ends at the specified end time. The program can also be set to start immediately with no delay.

Note

When the end time for a daytime program is changed, the start will be delayed. Delay settings and delay step can then be specified. If a program cannot complete at an end time in the current day, it will move forward to the next day.

To adjust the program end time:

- On the Reaction Chamber Available screen, press the program's End Time.

Changing the end time for the program

The Reaction Chamber Available - Set End Time screen is displayed:

- Use the number pad to set the required end time.

  If the system clock is in 12-hour mode, press am/pm, as required.

- To move the end time back or forward by 24 hours, press Previous Day or Next Day, respectively.

Note

You should not normally need to move the time forward if the working week is defined correctly (refer to Setting the Workflow Processing Options for more information). However, if the selected day is a holiday, you may need to use the Next Day button.

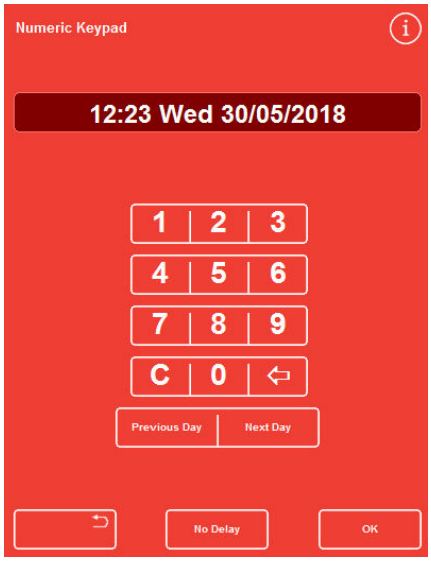

The Reaction Chamber Available - Set End Time screen

- Press OK to save the changes.
- Start the selected program by pressing DELAYED START or IMMEDIATE START.

Note

*If you want the program to start immediately, select **No Delay** on the Reaction Chamber Available - Set End Time screen. Remember that if you do this, the program may complete when the instrument is unattended.*

Changing the Start Step

If required, the starting step for the selected program can be changed. You may want to do this if you are transferring specimens from another instrument.

To change the first step in the program:

- On the Reaction Chamber Available screen, press the Start Step button until the required step in the program is selected.

  A warning symbol is displayed, indicating that you have made a change to the default start step for the selected program.

- To change the start step back to its original setting, press Restore Defaults.
- Start the selected program by pressing IMMEDIATE START.

Note

All step start programs are immediate start programs.

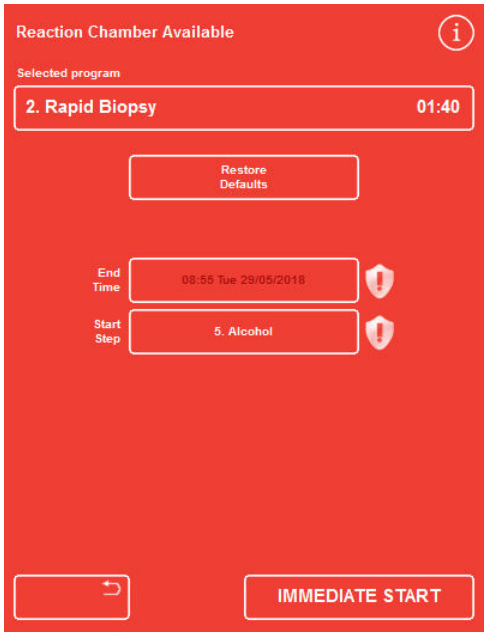

Changing the start step

Changing the Delay Settings

By default, the delay settings will hold specimens in the Reaction Chamber at ambient temperature with no vacuum. These conditions can be changed, as required.

Note

The delay temperature can be set at 1-55°C and ambient.

The instrument will not cool reagents below ambient conditions.

To change the delay temperature:

- On the Reaction Chamber Available screen, press the displayed **Delay Settings** temperature setting:

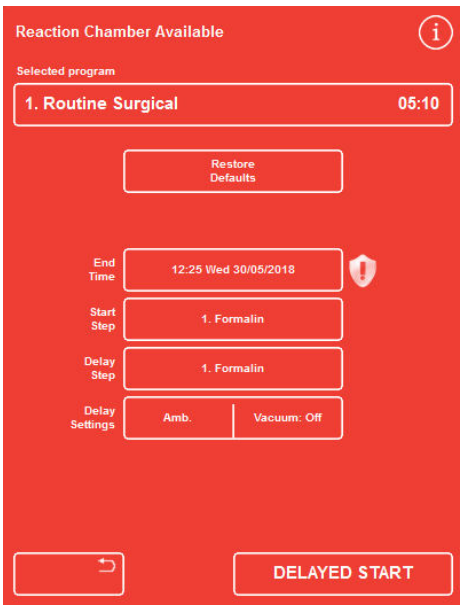

Changing the delay temperature

The Reaction Chamber Available - Set Delay Temperature screen is displayed:

- Use the number pad to set the required temperature. Alternatively, press **Amb** to hold the delay reagent at ambient temperature.
- Press **OK** to save the changes.

  A warning symbol is displayed, indicating that you have made a change to the default delay temperature. To change the temperature back to its original setting, press Restore Defaults.
- Start the selected program by pressing **DELAYED START**.

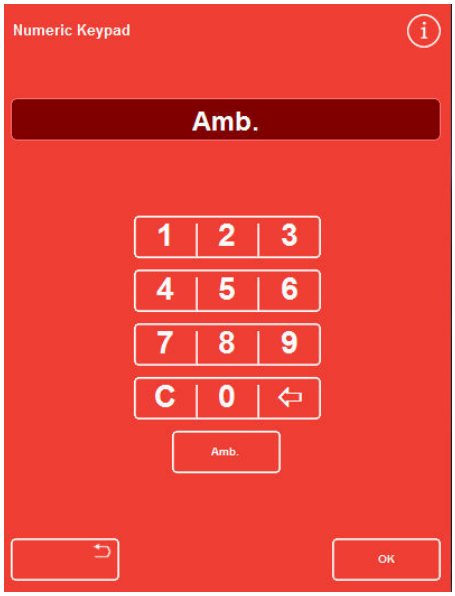

The Reaction Chamber Available - Set Delay Temperature screen

To change the delay vacuum setting:

- On the Reaction Chamber Available screen, press the displayed vacuum setting (Vac) until the required setting is selected.
- You can choose from:

  Vac: Off: Specimens are held at atmospheric pressure.

  Vac: On: Specimens are held at approximately 600 mbar absolute (400 mbar below atmospheric pressure).

  Vac: Cycle: Specimens are held in a 15 minute, vacuum to atmospheric cycle that ranges from approximately 600 mbar absolute (vacuum conditions) through to atmospheric pressure.

  Press: Cycle Specimens are held in a10 minute, vacuum to pressure cycle that ranges from approximately 600 mbar absolute (vacuum conditions) through to 1200 mbar absolute (pressure conditions).

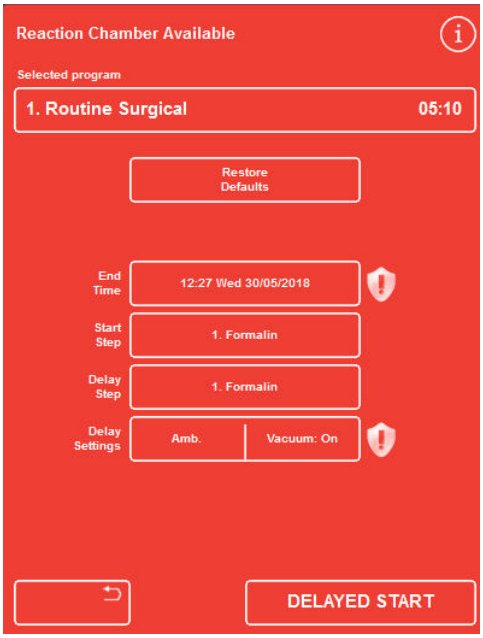

Changing the delay vacuum setting

- A warning symbol is displayed if you change the setting. To change the delay pressure back to its original setting, press Restore Defaults.
- Start the selected program by pressing DELAYED START.

Changing the Delay Step

The delay step specifies the reagent in which loaded specimens will be held before the program starts. This will default to the first step. For programs containing a fixative step the delay step can be changed to occur as part of the first alcohol step. This may be because the tissue specimens are pre-fixed or delicate.

To change the delay step:

- Press the appropriate button on the Reaction Chamber Available screen to select the reagent for the delay step.

  The selected delay step is shown and can be either the first fixative step in the program or the first alcohol step.

  A warning symbol is displayed if you change the step.

  Note

  If the delay step is changed to the first alcohol step, the temperature and vacuum settings used during the delay will be the same as those used within the alcohol step.

- To change the delay step back to its original setting, press Restore Defaults.
- Start the selected program by pressing DELAYED START.

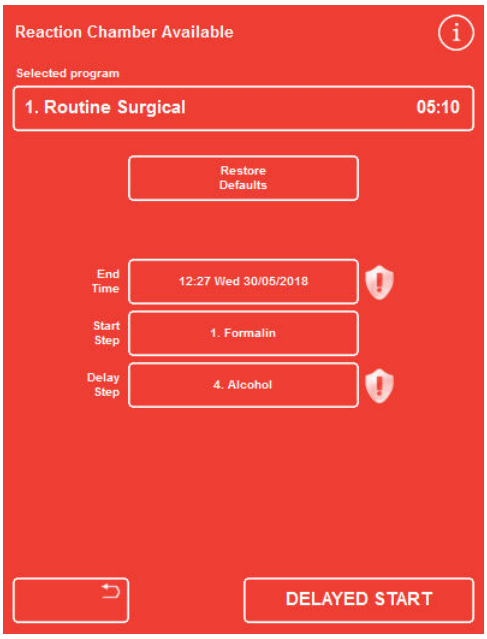

The delay step - changed from the default

Quality Control, Filter and Reagent Renewal Limits

When filters or reagents need to be changed, the Quality Control screen will appear when a processing run is started. The screen allows you to do the following:

- See how many weeks of use each filter has had and whether it is due to be replaced.
- Reset the usage value for a filter after it has been replaced.
- See which reagents are due to be rotated.
- Acknowledge prompts to discard or rotate reagents.
- Postpone wax discard or reagent rotation.

A yellow alert triangle is also displayed at the bottom of the screen. Any Quality Control alerts must be acknowledged or postponed to allow processing to start.

Note

*You can check the status of the instrument's reagents and filters at any time by selecting the **Quality Control** option from the Main Screen.*

Filter and Reagent Usage Information

Usage information is displayed over icons representing the Downdraft, Fixative and Charcoal replaceable filters and reagent bottles. The use limit count is displayed in weeks for the filters and number of times used for reagents. These limits can be set on the Use Limits screen (refer to Setting Use Limits for details).

For additional information about swapping filters, refer to Fitting the Filters and Reagent, Wax and Filter Checks.

Note

The recommended use limit for the filters is 13 weeks. This is set as the system default.

Examples:

The following symbols can be displayed over the filter icons:

The number indicates that the filter has been in use for seven weeks.

The colour green indicates that the filter is within the use limit period, defined on the Use Limit screen.

The number indicates that the filter has been in use for 12 weeks.

The colour yellow indicates that the filter should be replaced within one week.

The number indicates that the filter has been in use for 13 weeks.

The colour red and the warning triangle indicate that the defined usage limit has been reached.

Wax Discard and Reagent Rotation Information

The limits for wax discard and concealed reagent rotation are set on the Rotation Management screen (refer to Triggers for Reagent Rotation for details). Rotation triggers can be based on the following:

A1 alcohol quality (recommended)

Use limits

Days of the week

Rotation information is displayed on the Quality Control screen. The information is based on the defined triggers and limits and informs which reagents are due to be discarded or rotated and when the discard or rotation will occur.

Use limits can be set on the Use Limits screen (refer to Setting Use Limits for details).

Note

The limit is based on counts only for Fix1, Fix2, F1, F2, and F3.

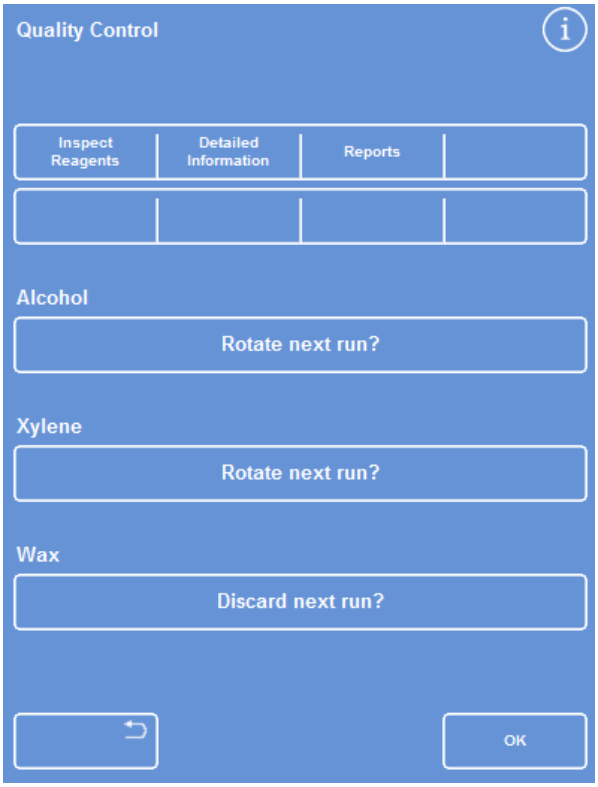

Quality Control – alcohol, xylene and wax rotation and discard information

Renewing Fixative Reagents

If a yellow warning triangle alert appears inside the fixative reagent bottles on the Main Screen and Information Bar, change the reagents before running the next process.

Dispose of the used fixatives in accordance with local procedures and regulations.

To change fixatives:

- Open the main doors of the instrument.

  The Quality Control screen appears.

- Take out the Fix1 and Fix2 bottles (if used) from the Reagent Storage Area. Replace the caps on the bottles and set the bottles aside for disposal.
- Press the **Fix1** image on the Quality Control screen to select it.

  The Fix1 bottle is outlined in black.

- Press **Remove** on the Quality Control menu.

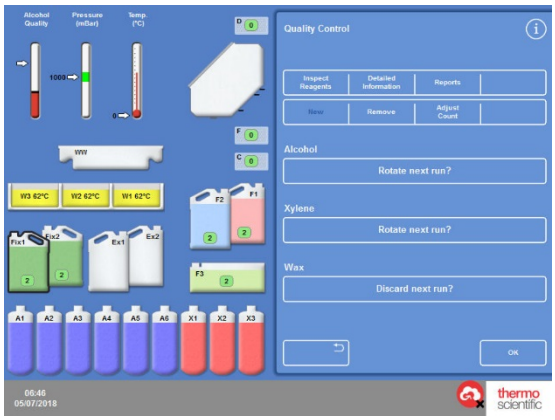

Removing Fix1 – Quality Control Screen

The Fix1 bottle image changes to empty with a warning triangle displayed within it.

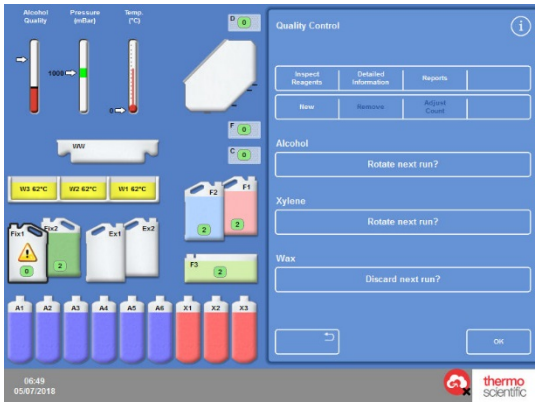

Renewing Fix1 – Quality Control Screen

- If you are using two fixative steps, press the **Fix2** image on the Quality Control screen and press **Remove** on the Quality Control menu.

  The Fix2 bottle image changes to empty with a warning triangle displayed within it.

- Clean the fixative reagent dip tubes. Refer to Cleaning the Reagent Supply Bottle Dip Tubes.
- Put new 5 litre bottle of fixative in positions Fix1 and Fix2 (if used) inside the Reagent Storage Area and fully insert the bottle dip tubes.
- Press the **Fix1** image on the Quality Control screen and press **New** on the Quality Control menu.

  The warning triangle inside the image of Fix1 disappears.

- If you are using a second fixative, press the Fix2 image on the Quality Control screen and press **New** on the Quality Control menu.

  The warning triangle inside the image of Fix2 disappears.

- Press **OK** to close the Quality Control screen.
- When you have finished replacing the fixative reagents, close the main doors.

Renewing Flush Reagents

If a yellow warning triangle alert appears inside the flush reagent bottles on the screen and information bar, change the reagents before running the next flush cycle.

Dispose of the used flush reagents in accordance with local procedures and regulations.

To renew flush reagents:

- Open the main doors and remove the flush reagent bottles from the Reagent Storage Area.
- Remove F2 first followed by F1 and then F3. Replace the caps on the F1 and F2 bottles and set the bottles aside for disposal.

- Press the **F2 image** on the Quality Control screen to select it.

  The bottle is outlined in black.

- Press **Remove** on the Quality Control menu.

  The F2 bottle image changes to empty.

Note

If the reagent use limits have not been reached, a warning triangle will appear on the bottle and the Information Bar when Remove is pressed. The warning triangle will already be present if the reagent has reached its use limit.

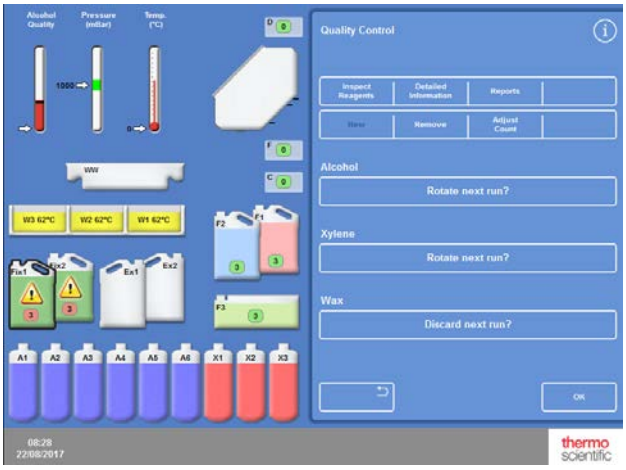

Removing a flush reagent – Quality Control Screen

- Repeat for F1 and F3.
- Clean the reagent dip tubes and clean and refill the F3 water flush bottle.

  For instructions, refer to Cleaning the Reagent Supply Bottle Dip Tubes and Cleaning the Flush 3 Water Bottle.

- Put the F3 bottle back into the instrument and place new five litre (or US gallon) bottles of F1 and F2 flush reagent in position, on top of the F3 bottle.
- Insert the reagent dip tubes in each bottle.

- Select each flush reagent in turn on the Quality Control screen and press **New**.
- Press **OK** to close the Quality Control screen.
- If all reagents have been replaced, close the main doors.

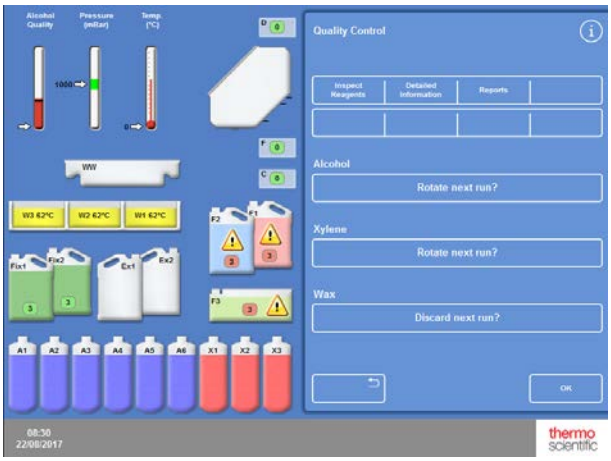

Renewing flush reagents – Quality Control Screen

Renewing Dehydrants, Clearants and Infiltrants Using Rotation

The Quality Control screen is displayed automatically at the beginning of a process run if dehydrants, clearants or infiltrants (wax) need to be renewed.

Alcohol Quality Warning

If alcohol quality in bottle A1 has reached the trigger for rotation (depicted by the white arrow reaching the top of the red bar), a triangle is displayed above the Alcohol Quality gauge on the Main Screen:

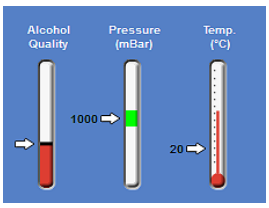

The Alcohol Quality gauge indicates rotation due

In-process Reagent Rotation

Revos uses an in-process system of reagent rotation for managing the renewal of dehydrants (A1-A6), clearants (X1-X3) and infiltrants (W1-W3) across twelve containers, using one rotation procedure. This process operates in the following way:

- The used reagent from the appropriate containers (used for the first steps in these processing groups) is discarded into the exchange bottles or waste wax tray.
- The rest of the reagents are rotated (A2 becomes A1, A3 becomes A2, and so on.)
- The last container in each group (A6, X3 and W3) is left empty ready for fresh reagents to be loaded.

To rotate a dehydrant:

- When the reagents are due to rotate, the Quality Control screen will automatically display '**Will rotate next run**' in yellow under the appropriate reagent.

Select the reagent to be rotated

'**Rotate next run?**' changes to '**Will rotate next run Place an empty bottle in Ex1 position**':

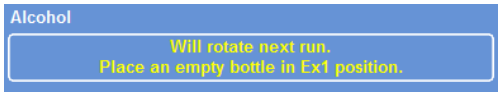

Alcohol will rotate on the next run

- To postpone or cancel the rotation click on the button.

To rotate a clearant:

- Press **Rotation due next run** to select the group of reagent bottles which are due to rotate.

Select the reagent to be rotated

'**Rotate next run**' changes to ' **Will rotate next run Place an empty bottle in Ex2 position** ':

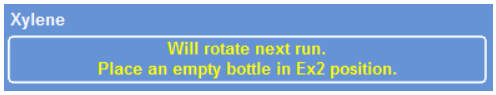

Xylene will rotate on the next run

To postpone or cancel the rotation click on the button.

To discard wax:

- Press Discard due next run to select the wax baths.

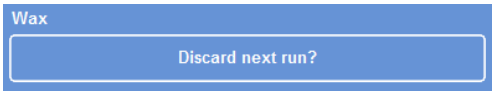

Selecting the wax baths

- ‘Discard next run?’ changes to 'Will discard next run Place an empty Wax Waste tray in WW position'.

Wax will discard on the next run

- To postpone or cancel the rotation click on the button.

Reagent Rotation Example

A typical example procedure where alcohol, xylene and wax are rotated at the same time, triggered by the quality of alcohol in bottle A1 is described below. The example assumes a schedule of one process run per day.

Day 1

- The alcohol quality has reached its defined limit and a triangle is displayed above the Alcohol Quality Gauge on the Main Screen.
- The Quality Control screen is displayed automatically when the next processing run is initiated.
- The alcohol and xylene buttons on the Quality Control screen both indicate 'Will rotate next run'.
- The wax button indicates 'Will discard next run'.

- Press OK at the bottom of the Quality Control menu.
- Open the instrument's doors and ensure that the exchange bottles, Ex1 and Ex2 are empty and that an empty consumable waste wax tray (WW) is fitted above the wax baths, W1 and W2.
- Close the doors.

- Start processing to continue with the rotation.

Revos uses reagent A1 as normal and discards it into EX1 at the end of the step. The subsequent alcohol bottles are used in their usual order but all are moved forward by one position when the alcohol is returned. For example, the content of A2 becomes the new content of A1.

The xylene and wax are rotated in a similar way; X1 is discarded into EX2, W1 is discarded into WW.

Day 2

- When the processing run has completed, the display indicates A6, X3, and W3 are empty; Ex1, Ex2 and WW are full.

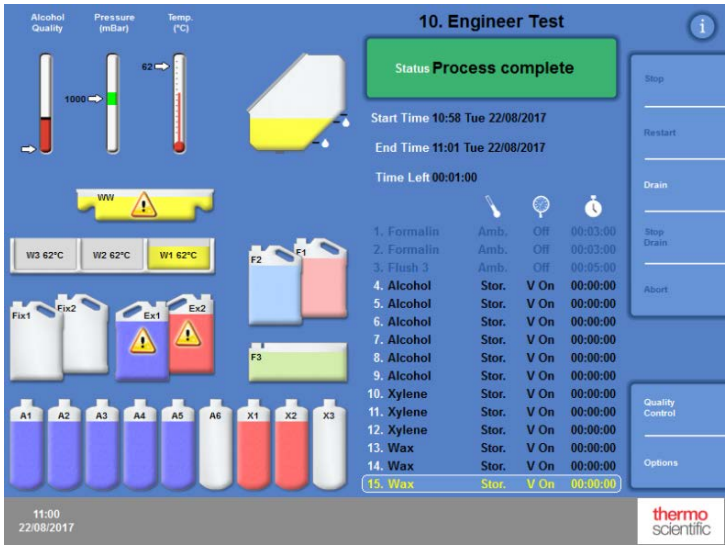

Empty and full positions prior to the completion of rotation

Replace Wax:

- Open the main doors, and carefully take out the consumable waste wax tray.

  The Quality Control screen appears.

- On the Quality Control screen, press the waste wax tray (WW) and then press Remove.
- Take a new consumable waste wax tray and slide it into position above the wax baths.
- Add wax pellets to the empty wax bath W3.
- Press 'New' to confirm new wax is loaded.
- Ensure the 'Discard next run?' is selected.
- While the wax is heating, replace the alcohol and xylene.

Confirm wax is loaded button

Replacing the Alcohol and Xylene

- Take out containers Ex1 (waste alcohol) and Ex2 (waste xylene) and dispose of the contents, following local regulations.
- Place new 5 litre (or 1 US gallon) bottles of 100% alcohol and xylene into positions Ex1 and Ex2.

Note

The majority of under-fill problems on Revos, can be eliminated by using 5 litre reagent bottles.

- On the Quality Control screen, press the Ex1 Bottle and remove then press New.
- Press the Ex2 Bottle on the display and remove then press New.

Note

Before continuing, ensure that the wax level is correct; refer to Loading Wax for details. Running your next process completes the reagent rotation by transferring the fresh reagents to their new positions.

Chapter 4 - Advanced Operation

This chapter describes how to take control of the settings and programs which are used by Revos to process specimens efficiently and safely. The following subjects are covered:

- Managing and ensuring the quality of the reagents and waxes that are used for specimen processing.
- Setting the triggers that prompt operators to change the reagents in order to maintain the quality of specimen processing.
- Controlling how and when specimens are processed.
- Creating new programs and flushes to meet specific processing requirements.
- Adding access code protection to certain system functions.
- Defining the alarms and alerts that are triggered when particular system events or instrument malfunctions occur.
- Saving instrument and program settings to removable media.
- Sending specific system event data from the instrument via a LIMS interface.
- Changing the system time, date and display language.

Reagent Management

Revos ensures that each reagent is used in the most cost-effective way. When required, you will be prompted to change fixative and flush reagents and to initiate automated discard and reagent rotation processes from the concealed bottles. Unless the instrument is being moved or decommissioned, there will not be any need to remove all of the reagents from the instrument.

Configuring and Loading Reagents

Reagents are configured and loaded when the instrument is set up. For details, refer to Chapter 2 – Installation and Setup.

To load in different dehydrants, clearants and infiltrants, you must unload the current set of reagents using the Unload Reagents option (refer to Unloading Reagents) and then load in the new set of reagents using the Load Reagents option (refer to Loading Reagents).

Note

Load Reagents and Unload Reagents, should only be used when the entire set of reagents on-board the unit are being replaced. If it's not the entire set (i.e. A1 through W3), then Inspect Reagents should be used & reagents can be replaced selectively.

Reagent and Filter Quality Control

Revos continually monitors reagents and filters against quality and usage parameters to ensure that processing is safe, reliable and reproducible. These parameters are set manually and determine when quality control alerts to change reagents or filters are issued.

All of the options required to check and monitor reagents and filters are in the Quality Control menu. To display the menu, from the Main Screen select Quality Control.

In addition to viewing the status of all reagents and filters, you can:

- Acknowledge, request or postpone rotation prompts.
- Draw a particular reagent into the Reaction Chamber for inspection, sampling, topping-up and, if necessary, discarding.
- View detailed information about reagents.
- Run and view reports which provide summary and detailed information on reagent usage.

Reagent, Wax and Filter Checks

The status of reagents, wax and filters can be viewed from the Quality Control screen. Here you will see a combination of colour-coded use counts, warning triangles and rotation status labels indicating which filters or reagents need to be changed or are due to be rotated.

For additional information about the filters, refer to Fitting the Filters and Filter and Reagent Usage Information.

The **Detailed Information** option provides more information on a particular reagent, including loading dates for concealed bottles and wax, reagent usage count and date of the last reagent rotation. For more information, refer to Displaying Detailed Reagent Information.

Where necessary, any concealed reagent or wax can be drawn into the Reaction Chamber for visual inspection or sampling outside of processing. Refer to Inspecting Reagents and Waxes for more information.

Note

Information for a specific wax bath or concealed reagent bottle is only available using the Detailed Information option.

To check the status of the filters, reagents and wax:

- From the Main Screen, press **Quality Control**.

  The Quality Control screen shows the status of the filters, fixatives and flush reagents.

  Buttons showing the rotation or discard status are displayed in the Quality Control menu.

- Check the status of reagents, wax and filters and rotate, discard, or change, as necessary.
- Press **OK** to return to the Main Screen.

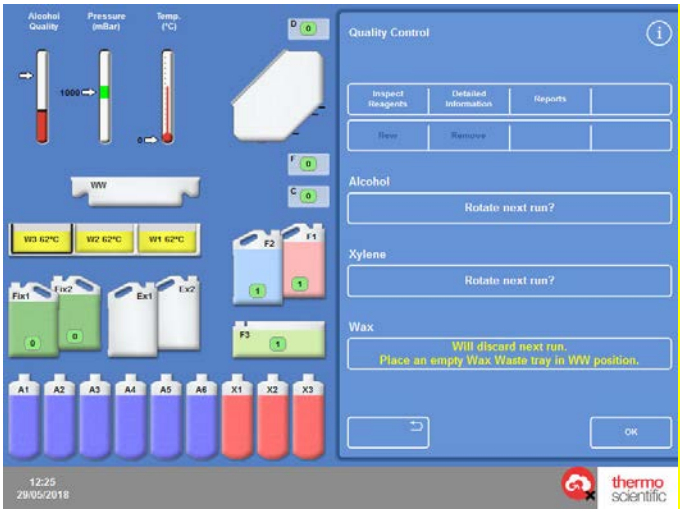

The Quality Control screen

Displaying Detailed Reagent Information

The Detailed Information screen shows information about the usage of the reagent bottles and wax baths.

To view detailed reagent information:

- Select **Quality Control** > **Detailed Information**.

  The Quality Control - Detailed Information screen appears.

Detailed Reagent Information Fields Explained

The following information is displayed on the Quality Control - Detailed Information screen:

Columns	Description
Order Used	The order in which the reagent bottles and wax baths are used.
Loaded Used	The date the reagent was loaded into the instrument using the Load Reagents option (refer to Loading Reagents) and the number of times the reagent has been used at its current position.
Rotated Used	The date that the reagent was last rotated and the number of times it has been used since the rotation.

Rows	Description
Ex1a	Exchange bottle – containing discarded reagent
A1, A2, A3, A4, A5, A6	Alcohol bottle positions
Ex1b	Exchange bottle – containing new reagent
Ex2a	Exchange bottle – containing discarded reagent
X1, X2, X3	Xylene bottle positions
Ex2b	Exchange bottle – containing new reagent
WW	Waste wax tray
W1, W2, W3	Wax baths
A1 Quality	Percentage used as shown on main screen

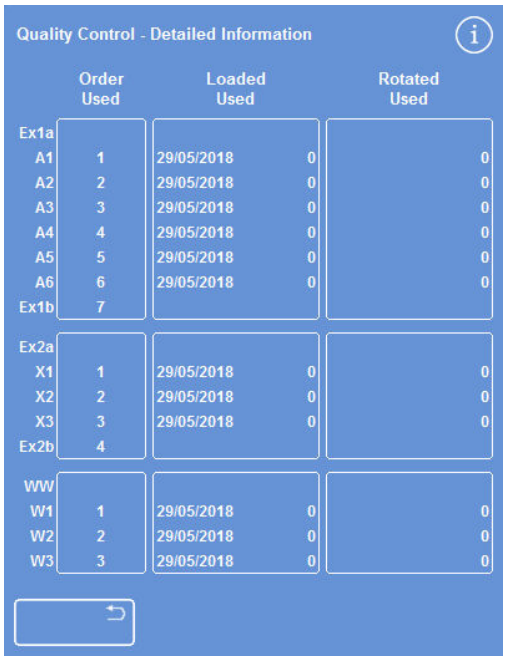

The Detailed Information screen with fixative adjustment

Changing the Fixative Use Count

If you are temporarily using different types of fixative, it is possible to reinstall a fixative count rather than changing it.

- Select the fixative bottle that you want to reinstall.

  The bottle is highlighted and an Adjust Count button appears below the A1 Quality information.
- Press the **Adjust Count** button, enter the required use count using the keypad and then press **OK**.

  A new use count appears on the fixative bottle.
- Press to return to the Quality Control menu and Quality Control screen.
- Press **OK** to return to the Main Screen.

Inspecting Reagents and Waxes

In addition to viewing detailed usage information on reagents, you can draw a reagent into the Reaction Chamber for visual inspection.

Reagents must be inspected in an empty chamber, without baskets.

Once in the Reaction Chamber you can:

- Lift the Reaction Chamber lid and inspect or sample the reagent.
- Check that the volume / fluid level is correct.

  When the instrument is loaded from five litre bottles, the chamber fluid reaches the top marking round the central cone in the reaction chamber.

  If using 1 gallon (US) bottles, the chamber fluid level reaches the lower marking on the central cone.
- Add more reagent if the level is too low, but do not overfill

Wax must be present in the Reaction Chamber for a minimum of 10 minutes before returning to the wax bath.

If wax is drawn into the Reaction Chamber, run a flush before you inspect another reagent or initiate a processing run.

After inspection, the reagent can either be returned to the reagent bottle or wax bath or discarded. If you discard a reagent, you will be prompted to load a new reagent into that position.

When you inspect reagents, there is a risk that processing reagents could become contaminated. Always inspect reagents in an order based upon reagent miscibility and flush between reagent checks as needed.

After inspecting xylene or equivalent reagents, run a flush before further processing. Refer to Flushing the Instrument for details.

Inspecting a Reagent

You can inspect any of the instrument's reagents, including the dehydrants (A1–A6) and clearants (X1–X3) in the concealed bottles at the back of the instrument and the wax in the three wax baths (W1–W3).

Note

You cannot start a processing run when you are inspecting a reagent. After inspection, ensure that you either return the reagent to its bottle or wax bath or discard it and load a new reagent after inspection.
The Process and Flush buttons are not displayed when inspecting a reagent.

To inspect a reagent:

- Select **Quality Control** > **Inspect Reagents**.
- Select the reagent that you want to inspect by pressing the bottle or wax bath on the Touchscreen.

  The reagent bottle or wax container will become highlighted.
- On the Quality Control - Inspect Reagents menu, press **Inspect Reagent.**

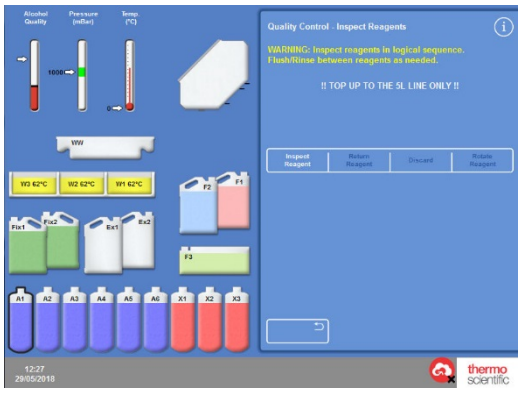

Highlighted reagent at position A1, selected for inspection

The selected reagent is transferred to the Reaction Chamber:

- Lift the chamber lid and inspect or sample the reagent, as required.

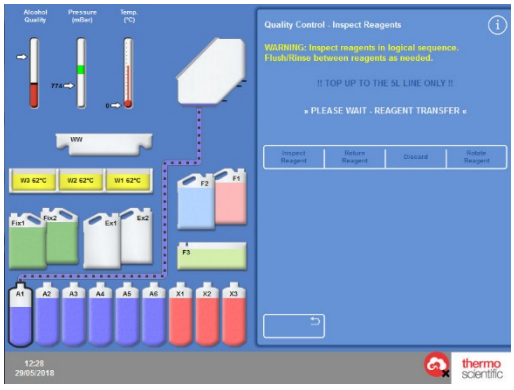

Reagent transfer from A1 to the Reaction Chamber

- Check that the fluid level is correct.
  If not, more reagent can be added to ensure that the level in the Reaction Chamber is correct.
- The two lines around the central core indicate the min and max levels for a reagent.
- After checking, choose from one of the options displayed on the Quality Control - Inspect Reagents screen.
- Press **Return Reagent** to keep the reagent and drain it from the Reaction Chamber back into the same bottle or wax bath. You can then inspect another reagent.
  - or -
  Discard the reagent or wax using the **Discard** option.

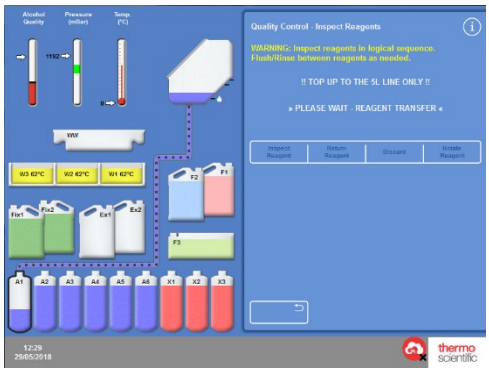

Reagent inspection options

Note

If you are inspecting different reagent types, inspect them in a logical sequence and ensure that you flush the Reaction Chamber as necessary to prevent reagent contamination.

RFID Reagent Inspection

- When entering the Quality Control - Inspect Reagents screen select the bottle to inspect.

Note

You will be able to see the Reagent Data which will allow inspection of the reagents details.

- To draw the reagent into the chamber, for visual inspection, press the Inspect Reagent button.

Note

Once the reagent is in the chamber the decision can be made to Return the Reagent to the original bottle or Discard.

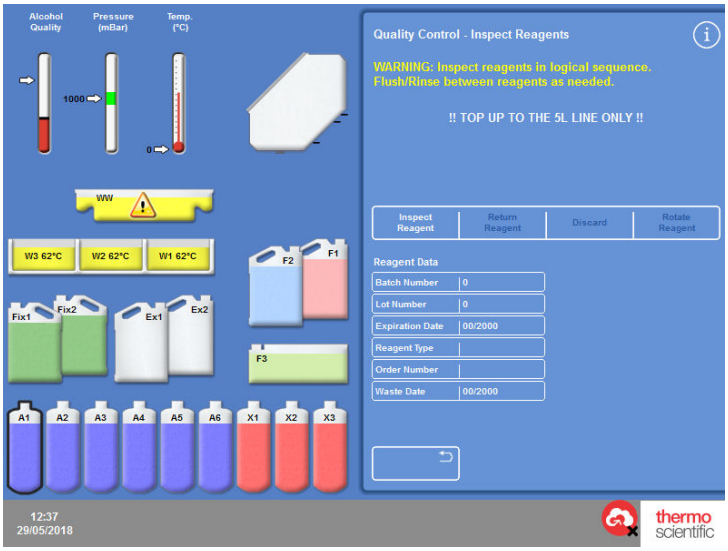

Discarding a Reagent after Inspection

Reagents or wax can be discarded after inspection, if required.

To discard a reagent:

- Inspect the reagent in the Reaction Chamber.
- Press Discard.
- Ensure that you have placed an empty bottle in position Ex1 or Ex2.
- Press Confirm Loaded to drain the reagent from the Reaction Chamber into the empty exchange bottle.
- Discard the used reagent in accordance with local procedures and regulations.

To discard wax:

- Inspect the wax in the Reaction Chamber.

Note

Wax must be present in the Reaction Chamber for a minimum of 10 minutes before returning to the wax bath.

- Press Discard.
- Ensure that an empty consumable wax waste tray is installed in the instrument.
- Press Confirm Loaded to drain the wax from the reaction chamber into the wax waste tray.
- Discard the waste wax in accordance with local procedures and regulations.
- Fit a new consumable wax waste tray.

RFID Discarding

- When the reagent is required to be discarded the sequence is press the Discard button, ensure an empty bottle is placed in the appropriate Ex location and then press the Unload button.

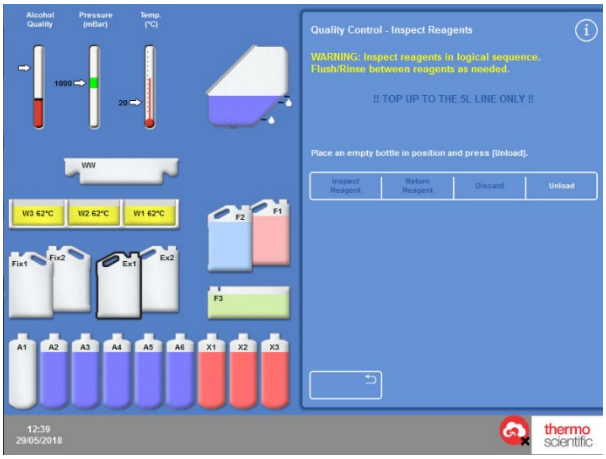

- The system will then drain the reagent to the appropriate Ex bottle.

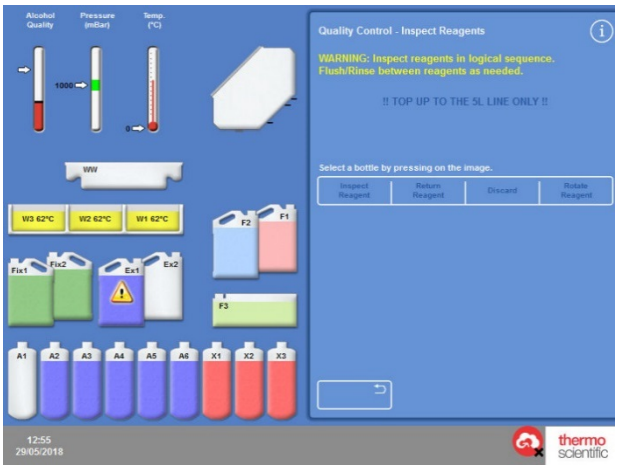

- To complete the unloading process select the Ex bottle and select the Remove Reagent button.