SAR Report

EUT Name: Halo Band

EUT Model: C9X87E

FCC ID: 2AP7T-3526

Prepared for:

Conde Verdon Company LLC
3200 Greenfield Rd., Ste 300
Dearborn, MI 48120
USA

Prepared by:

TÜV Rheinland of North America
5015 Brandin Court
Fremont, CA 94538
Tel: (929) 249-9123
Fax: (925) 249-9124
http://www.tuv.com/

Report/Issue Date: March 26, 2020
Report Number: 31953497.001
Job Number: 0234110820

TABLE OF CONTENTS

1 EXECUTIVE SUMMARY 6
1.1 SCOPE 6
1.2 PURPOSE 6
1.3 SUMMARY OF TEST RESULTS 6
1.4 EQUIPMENT MODIFICATIONS 6
1.5 DEVIATIONS FROM THE SPECIFICATIONS 6
2 LABORATORY INFORMATION 7
2.1 ACCREDITATIONS & ENDORSEMENTS 7
2.2 TEST FACILITIES 7
3 PRODUCT INFORMATION 8
3.1 PRODUCT DESCRIPTION 8
3.2 EQUIPMENT UNDER TEST (EUT) 8
3.3 AIR INTERFACES 8
3.4 ANTENNA INFORMATION 8
3.5 EQUIPMENT CONFIGURATION 9
3.6 DESCRIPTION OF SAMPLE USED FOR TESTING 9
3.7 DESCRIPTION OF SAMPLE ACCESSORIES USED FOR TESTING 9
3.8 SUPPORT EQUIPMENT USED FOR TESTING 9
4 SAR MEASUREMENT INFORMATION 10
4.1 TEST SPECIFICATIONS 10
4.2 SAR LIMIT 10
4.3 ENVIRONMENTAL CONDITIONS 10
4.4 DEVICE TEST POSITIONS 10
4.5 SPEAG DASY5 MEASUREMENT SYSTEM 13
4.6 SAR SCALING (REPORTED SAR) 19
5 CONDUCTED OUTPUT POWER MEASUREMENTS 20
5.1 BLUETOOTH 21
6 SAR MEASUREMENT RESULTS 22
6.1 LIQUID MEASUREMENTS 22
6.2 SYSTEM CHECK 22
6.3 TEST CONFIGURATIONS 23
6.4 LIMB SAR RESULTS 23
6.5 IN FRONT OF FACE SAR RESULTS 23
6.6 MEASUREMENT VARIABILITY 23
7 TEST EQUIPMENT LIST 24
8 REVISION HISTORY 25

APPENDIX A: PLOTS

APPENDIX B: PHOTOS

APPENDIX C: CALIBRATION CERTIFICATES

Statement of Compliance

Manufacturer:	Conde Verdon Company LLC 3200 Greenfield Rd., Ste 300 Dearborn, MI 48120 USA
Name of Equipment:	Halo Band
Model Number:	C9X87E
FCC ID:	2AP7T-3526
Test Dates:	August 6, 2019

Guidance Documents:

FCC Code of Federal Regulations Title 47, Various FCC KDBs

RSS-102, Safety Code 6, Various FCC KDBs

Test Methods:

IEEE 1528-2013, Various FCC KDBs

IEEE 1528-2013, IEC 62209-1:2005, IEC 62209-2:2010, Various FCC KDBs

The RF exposure test and documented data described in this report has been performed and recorded by TÜV Rheinland, in accordance with the standards and procedures listed herein. As the responsible authorized agent of the EMC laboratory, I hereby declare that the equipment described above has been shown to be compliant with the RF exposure requirements of the stated regulations and standards based on these results. If any special accessories and/or modifications were required for compliance, they are listed in this report.

This report must not be used to claim product endorsement by A2LA or any agency of the U.S. Government. This report shall not be reproduced except in full, without the written authorization of TÜV Rheinland of North America.

p.p. [signature]	March 26, 2020	X [signature] Arndt Stoecker	March 26, 2020
Test Engineer Josie Sabado	Date	Laboratory	

Statement of Compliance

Test Cert. # 3331.02

1 Executive Summary

1.1 Scope

This report is intended to document the status of conformance with the applicable RF exposure requirements based on the results of testing performed on August 6, 2019 on the Halo Band model C9X87E manufactured by Conde Verdon Company LLC. This report only applies to the specific samples tested under the stated test conditions. It is the responsibility of the manufacturer to assure that production units of this model are manufactured with identical or equivalent electrical and mechanical components. This report is further intended to document changes and modifications to the EUT throughout its life cycle. All documentation will be included as a supplement.

1.2 Purpose

Testing was performed to evaluate the SAR levels of the EUT in accordance with the applicable requirements, procedures, and criteria defined in the application of regulations and application of standards listed in this report.

1.3 Summary of Test Results

Equipment Class	Exposure Condition	Maximum Scaled 1g SAR (W/kg)	Result
DSS	Limb	0.678	Complies
	In front of face	0.145	Complies

1.4 Equipment Modifications

No modifications were found to be necessary in order to achieve compliance.

1.5 Deviations from the Specifications

None

2 Laboratory Information

2.1 Accreditations & Endorsements

2.1.1 NIST / A2LA

TUV Rheinland of North America is accredited by the National Voluntary Laboratory Accreditation Program, which is administered under the auspices of the National Institute of Standards and Technology. The laboratory has been assessed and accredited in accordance with ISO Guide 17025:2017. The scope of laboratory accreditation includes emission and immunity testing. The accreditation is updated every 2 years.

2.1.2 US Federal Communications Commission

TUV Rheinland of North America at 5015 Brandin Court, Fremont, CA 94538, is accredited by the commission for performing testing services for the general public on a fee basis. These laboratory test facilities have been fully described in reports submitted to and accepted by the FCC. The laboratory scope of accreditation includes: Title 47 CFR Parts 15, 18, 22, 24, 27, and 90. The accreditation is updated every 2 years.

2.1.3 Innovation, Science and Economic Development Canada

TUV Rheinland of North America at the 5015 Brandin Court, Fremont, CA 94538 address is accredited by Industry Canada for performing testing services for the general public on a fee basis. This laboratory test facility has been fully described in reports submitted to and accepted by Industry Canada (File Number 2932D). The accreditation is updated every 3 years.

2.1.4 Acceptance by Mutual Recognition Arrangement

The United States has an established agreement with specific countries under the Asia Pacific Laboratory Accreditation Corporation (APLAC) Mutual Recognition Arrangement. Under this agreement, all TUV Rheinland at 5015 Brandin Court, Fremont, CA 94538 test results and test reports within the scope of the laboratory NIST / A2LA accreditation will be accepted by each member country.

2.2 Test Facilities

All of the test facilities are located at 1279 Quarry Lane, Ste. A, Pleasanton, California 94566, USA. The 5015 Brandin Court, Fremont, CA 94538, USA location is considered a Pleasanton annex.

3 Product Information

3.1 Product Description

The Model C9X87E utilizes Bluetooth LE. The EUT will be in compliance with regulatory standards of regions it will be operating in.

Two versions of C9X87E are available. The difference between the models is the memory size and a flex cable. In this report each version is described as primary unit and secondary unit.

3.2 Equipment Under Test (EUT)

EUT Specification	
EUT Dimensions	21.51 x 41.7 x 10.53 mm
Power Input	Internal battery
Exposure Type	☒ General Population / Uncontrolled ☐ Occupational / Controlled
Exposure Condition	☐ Next to the Ear ☐ Head Worn ☐ Body Worn ☐ Next to the Body ☒ Limb ☒ In front of face
Hardware Version	DVT
Software Version	N/A
Power Reduction Modes	None

3.3 Air Interfaces

Air Interface	Supported Capabilities	Modulation	Maximum Duty Cycle	Band	Frequency Range (MHz)	Maximum Output Power Including Tolerance (dBm)
Bluetooth	• Basic Data Rate • Enhanced Data Rate • Low Energy	• GFSK • π/4 DQPSK • 8DPSK	BDR / EDR: 100% LE: 85.2%	N/A	2400 – 2483.5	13

3.4 Antenna Information

Antenna	Internal / External	Antenna Type	Frequency Range (MHz)	Antenna Gain (dBi)
Bluetooth	Internal	Internal, Folded Monopole	2400 – 2483.5	-2.2

3.5 Equipment Configuration

Test software was used to set the radio to transmit continuously with a given modulation, packet type, channel, and power. Bluetooth BDR/EDR modes used "Tx Certification" test mode. Bluetooth LE modes used "Pkt-Tx" test mode.

3.6 Description of Sample used for Testing

Device	Serial Number	Configuration	Used For
Primary Unit	29200KM	Conducted	Conducted power
Primary Unit	29200L0	Radiated	SAR
Secondary Unit	29200KJ	Radiated	SAR

3.7 Description of Sample Accessories used for Testing

The accessory bands from the manufacturer are cloth and rubber materials. No accessories were used for testing.

3.8 Support Equipment used for Testing

No support equipment was used during testing.

4 SAR Measurement Information

4.1 Test Specifications

The following specifications were used during the course of testing and are referenced in this test report.

Specification Number	Title	Version
IEEE 1528	IEEE Recommended Practice for Determining the Peak Spatial-Average Specific Absorption Rate (SAR) in the Human Head from Wireless Communications Devices: Measurement Techniques	2013
FCC KDB 447498, D01	RF Exposure Procedures and Equipment Authorization Policies for Mobile and Portable Devices	v06
FCC KDB 865664, D01	SAR Measurement Requirements for 100 MHz to 6 GHz	v01r04
RSS-102	Radio Frequency (RF) Exposure Compliance of Radiocommunication Apparatus (All Frequency Bands)	Issue 5 March 2015
IEC 62209-2	Human exposure to radio frequency fields from hand-held and body-mounted wireless communication devices – Human models, instrumentation, and procedures – Part 2: Procedure to determine the specific absorption rate (SAR) for wireless communication devices used in close proximity to the human body (frequency range of 30 MHz to 6 GHz)	Ed. 1.0 2010

4.2 SAR Limit

The following SAR limits have been applied in this test report to evaluate the compliance of the EUT against regulatory requirements.

Reference	Exposure Condition	Limit (W/kg)	Average Mass (g)
FCC §1.1310 & §2.1093	Head and Trunk	1.6	1
	Extremity	4.0	10
RSS-102 Safety Code 6	Head, Neck, and Trunk	1.6	1
	Limbs	4.0	10

4.3 Environmental Conditions

The ambient and liquid temperature is measured throughout the course of SAR measurements and is maintained between 18 °C to 25 °C. The temperature drift of the liquid is ≤ 2 °C

4.4 Device Test Positions

Head Positions

Reference lines are drawn on the handset to accurately position the handset against the SAM phantom. The vertical center line bisects the width of the handset into two equal halves. The horizontal line is perpendicular to the vertical center line and passes through the center of the acoustic output. The intersection point of the vertical center line and the horizontal line is the ear reference point. The following figure illustrates the position of the vertical center line and the horizontal line.

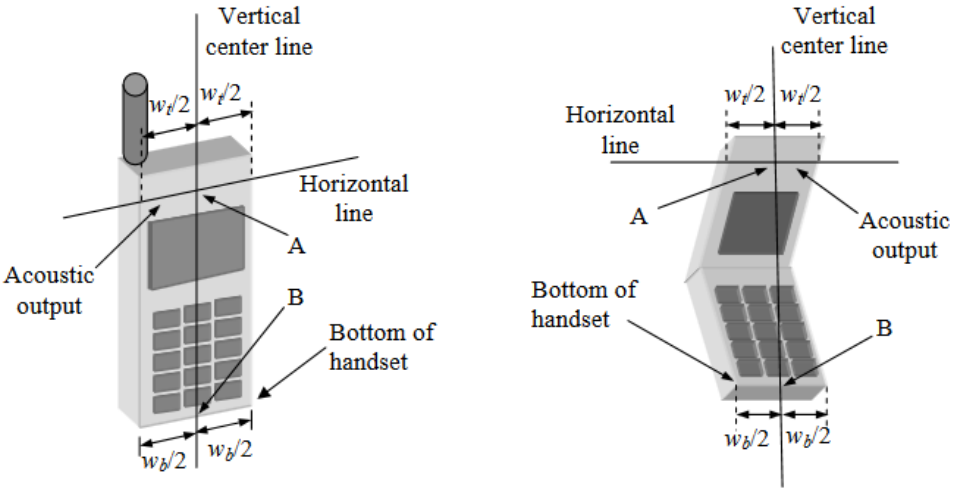

There are four head positions: right touch, right tilt, left touch, and left tilt. Left and right indicate the side of the head.

In touch positions the handset makes contact with the head at two points. The first contact point is where the ear reference point of the handset makes contact with the ear pinna of the SAM phantom. The second contact point is where the handset makes contact with the cheek of the SAM phantom. The following figure is an example of the left touch position.

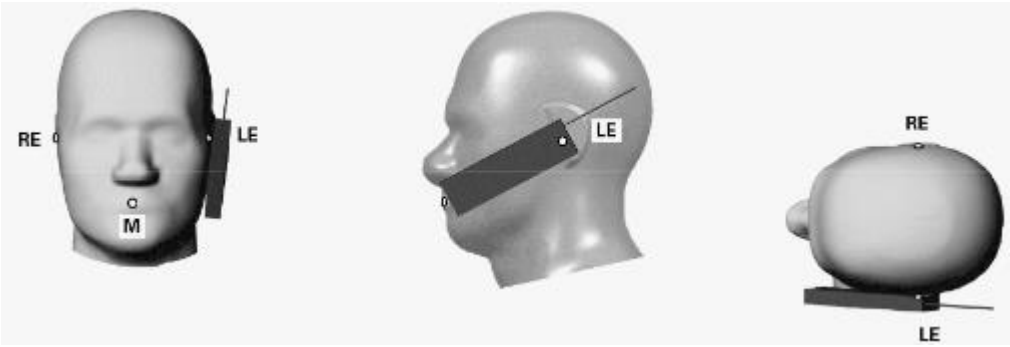

In tilt positions the handset is tilted at a 15° angle from the ear. The top edge of the handset makes contact with the SAM phantom. The ear reference point of the handset is centered on the ear pinna of the SAM phantom. The following figure is an example of the left tilt position.

Body Positions

Body SAR measurements are done for the surfaces of the EUT that would face the user during normal operation. The center of the EUT surface is centered on the surface of the flat phantom. If applicable, a separation distance specified by the manufacturer is used between the EUT and the phantom.

For EUTs that do not fit completely within the measurement area of the phantom, pretest measurements are done to find the hot spot. Once the hot spot is found, the EUT is placed so that the hot spot is at the center of the flat phantom.

4.5 SPEAG DASY5 Measurement System

4.5.1 System Overview

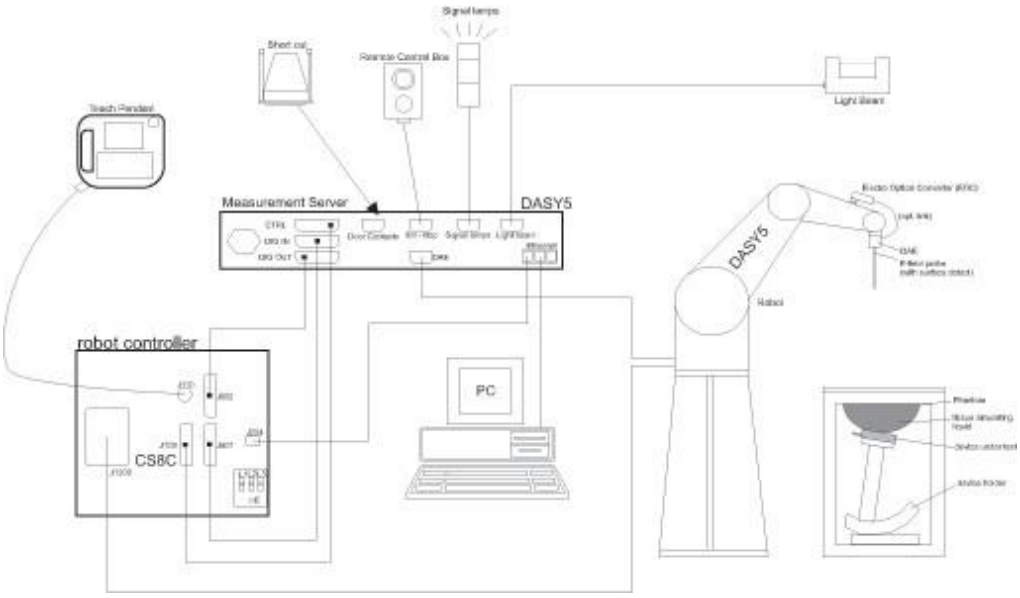

The SPEAG DASY5 measurement system consists of the following items:

- A standard high precision 6-axis robot (Stäubli TX/RX family) with controller, teach pendant and software. An arm extension for accommodating the data acquisition electronics (DAE).
- An isotropic field probe optimized and calibrated for the targeted measurement.
- A data acquisition electronics (DAE) which performs the signal amplification, signal multiplexing, AD-conversion, offset measurements, mechanical surface detection, collision detection, etc. The unit is battery powered with standard or rechargeable batteries. The signal is optically transmitted to the EOC.
- The Electro-optical converter (EOC) performs the conversion from optical to electrical signals for the digital communication to the DAE. To use optical surface detection, a special version of the EOC is required. The EOC signal is transmitted to the measurement server.
- The function of the measurement server is to perform the time critical tasks such as signal filtering, control of the robot operation and fast movement interrupts.
- The Light Beam used is for probe alignment. This improves the (absolute) accuracy of the probe positioning.
- A computer running Win7 professional operating system and the DASY5 software.
- Remote control and teach pendant as well as additional circuitry for robot safety such as warning lamps, etc.
- The phantom, the device holder and other accessories according to the targeted measurement.

4.5.2 Robot

The Stäubli TX60L robot is a high precision, high reliability industrial robot. The placement precision repeatability is within ±0.02 mm. It uses a brushless synchronous motor with low ELF interference. The robot is controlled by the Stäubli CS8c robot controller.

4.5.3 Data Acquisition Electronics

The data acquisition electronics consist of a highly sensitive electrometer-grade preamplifier with auto-zeroing, a channel and gain-switching multiplexer, a fast 16 bit AD-converter and a command decoder with a control logic unit. Transmission to the measurement server is accomplished through an optical downlink for data and status information, as well as an optical uplink for commands and the clock.

The mechanical probe mounting device includes two different sensor systems for frontal and sideways probe contacts. They are used for mechanical surface detection and probe collision detection.

The input impedance of both the DAE4 as well as of the DAE3 box is 200MOhm; the inputs are symmetrical and floating. Common mode rejection is above 80 dB.

4.5.4 Probe

The EX3DV4 dosimetric SAR probe are specially designed and calibrated for use in liquids with high permittivities. The enclosure of the probe is made of PEEK material. The probe is calibrated by SPEAG according to ISO/IEC 17025. See the appendix for the probe calibration report including specifications of probe parameters.

4.5.5 Phantoms

The SAM twin phantom is a fiberglass shell phantom with 2 mm ± 0.2 mm shell thickness (except the ear region, where shell thickness increases to 6 mm ± 0.2 mm). The phantom has three measurement areas:

- Left hand
- Right hand
- Flat phantom

The shape of the left hand and right hand phantoms are according to IEEE 1528 and IEC 62209-1. The relative permittivity of the shell is 3.5 ± 0.5. The loss tangent is ≤ 0.05.

The ELI phantom is intended for compliance testing of handheld and body-mounted wireless devices. It is fully compatible with IEC 62209-2. The flat bottom surface is an elliptical shape measuring 600 mm in length and 400 mm in width. The shell thickness is 2 mm ± 0.2 mm. The relative permittivity is 4 ± 1 and the loss tangent is ≤ 0.05.

4.5.6 System Check Procedure

The purpose of the system check is to verify that a specific SAR measurement system operates within its specifications at the device test frequencies. It is done within 24 hours before SAR measurements. The setup for system check is as follows

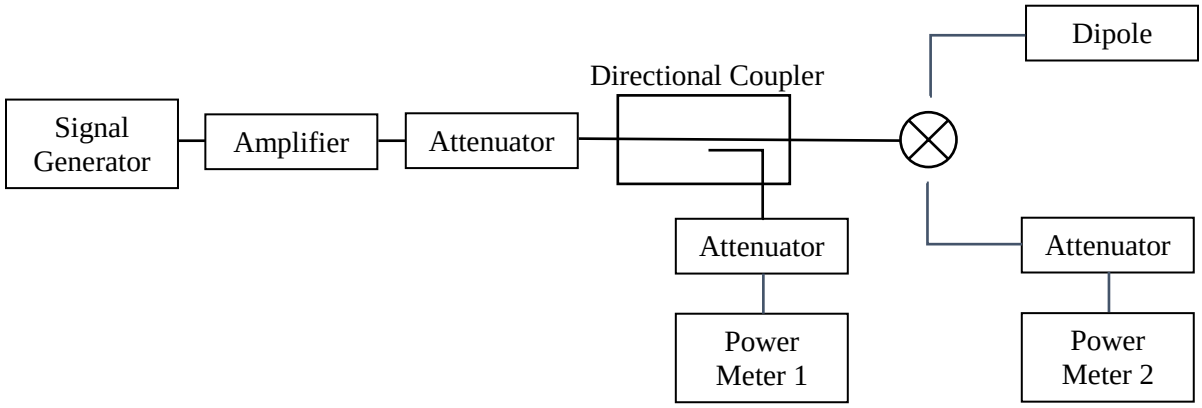

1. An unmodulated continuous wave signal is generated at the frequency to be tested.
2. The power at the input to the dipole is measured using power meter 2 while the forward power at the directional coupler is measured using power meter 1. The output power of the signal generator is varied until 20 dBm is measured at power meter 2.
3. Power meter 2 is disconnected and the dipole is connected. The output power of the signal generator is varied until power meter 1 measures the same forward power as when 20 dBm was measured with power meter 2.
4. A SAR measurement is performed using the dipole with the same area scan and zoom scan parameters required for a SAR measurement on the EUT.
5. The 1g and 10g SAR result is compared to the 1g and 10g SAR value in the dipole's calibration certificate.

4.5.7 SAR Measurement Procedure

Power Reference Measurement

A single point SAR measurement is measured above the center of the radiating structure. This power reference measurement is compared to the power drift measurement after the zoom scan to ensure the output power of the EUT does not drift during the SAR measurement.

Area Scan

The area scan is done in the x-y plane. The measurement grid is larger than the area of the EUT surface under test with the following characteristics:

	≤ 3 GHz	> 3 GHz
Maximum distance from the closest measurement point (geometric center of probe sensors) to phantom surface	5 mm ± 1 mm	$\delta \cdot \ln(2)/2$ mm ± 0.5 mm
Maximum probe angle from probe axis to phantom surface normal at the measurement location	30° ± 1°	20° ± 1°
Maximum area scan spatial resolution: Δx_{Area}, Δy_{Area}	≤ 2 GHz: ≤ 15mm 2 – 3 GHz: ≤ 12 mm	3 – 4 GHz: ≤ 12 mm 4 – 6 GHz: ≤ 10 mm
	When the x or y dimension of the test device, in the measurement plane orientation, is smaller than the above, the measurement resolution must be ≤ the corresponding x or y dimension of the test device with at least one measurement point on the test device.	
Note: δ is the penetration depth of a plane-wave at normal incidence to the tissue medium.		

Zoom Scan

Once the hot spot is found in the area scan, a zoom scan measurement is done above the hot spot. A uniform measurement grid is done in the x, y, and z direction in the form of a cube. The following characteristics are used:

	≤ 3 GHz	> 3 GHz
Maximum zoom scan spatial resolution: Δx_{zoom}, Δy_{zoom}	≤ 2 GHz: ≤ 8 mm 2 – 3 GHz: ≤ 5 mm	3 – 4 GHz: ≤ 5 mm 4 – 6 GHz: ≤ 4 mm
Maximum zoom scan spatial resolution, normal to phantom surface: Δz_{zoom}	≤ 5 mm	3 – 4 GHz: ≤ 4 mm 4 – 5 GHz: ≤ 3 mm 5 – 6 GHz: ≤ 2 mm
Minimum zoom scan volume: x, y, z	≥ 30 mm	3 – 4 GHz: ≥ 28 mm 4 – 5 GHz: ≥ 25 mm 5 – 6 GHz: ≥ 22 mm

Power Drift Measurement

A second single point SAR measurement is done at the same location as the power reference measurement. The delta between the power reference measurement and the power drift measurement shall not be more than ± 5%

4.5.8 Measurement Uncertainty

4.5.8.1 IEEE 1528-2013, 300 MHz - 3 GHz

Error Description	Uncertainty Value	Probability Distribution	Divisor	(c_i) 1g	(c_i) 10g	Std. Unc. (1g)	Std. Unc. (10g)	(v_i) v_{eff}
Measurement System								
Probe Calibration	± 6.0%	N	1	1	1	± 6.0%	± 6.0%	∞
Axial Isotropy	± 4.7%	R	√3	0.7	0.7	± 1.9%	± 1.9%	∞
Hemispherical Isotropy	± 9.6%	R	√3	0.7	0.7	± 3.9%	± 3.9%	∞
Boundary Effects	± 1.0%	R	√3	1	1	± 0.6%	± 0.6%	∞
Linearity	± 4.7%	R	√3	1	1	± 2.7%	± 2.7%	∞
System Detection Limits	± 1.0%	R	√3	1	1	± 0.6%	± 0.6%	∞
Modulation Response	± 2.4%	R	√3	1	1	± 1.4%	± 1.4%	∞
Readout Electronics	± 0.3%	N	1	1	1	± 0.3%	± 0.3%	∞
Response Time	± 0.8%	R	√3	1	1	± 0.5%	± 0.5%	∞
Integration Time	± 2.6%	R	√3	1	1	± 1.5%	± 1.5%	∞
RF Ambient Noise	± 3.0%	R	√3	1	1	± 1.7%	± 1.7%	∞
RF Ambient Reflections	± 3.0%	R	√3	1	1	± 1.7%	± 1.7%	∞
Probe Positioner	± 0.4%	R	√3	1	1	± 0.2%	± 0.2%	∞
Probe Positioning	± 2.9%	R	√3	1	1	± 1.7%	± 1.7%	∞
Max. SAR Evaluation	± 2.0%	R	√3	1	1	± 1.2%	± 1.2%	∞
Test Sample Related								
Device Positioning	± 2.9%	N	1	1	1	± 2.9%	± 2.9%	145
Device Holder	± 3.6%	N	1	1	1	± 3.6%	± 3.6%	5
Power Drift	± 5.0%	R	√3	1	1	± 2.9%	± 2.9%	∞
Power Scaling	± 0%	R	√3	1	1	± 0.0%	± 0.0%	∞
Phantom and Setup								
Phantom Uncertainty	± 6.1%	R	√3	1	1	± 3.5%	± 3.5%	∞
SAR correction	± 1.9%	R	√3	1	0.84	± 1.1%	± 0.9%	∞
Liquid Conductivity (mea.)[DAK]	± 2.5%	R	√3	0.78	0.71	± 1.1%	± 1.0%	∞
Liquid Permittivity (mea.)[DAK]	± 2.5%	R	√3	0.26	0.26	± 0.3%	± 0.4%	∞
Temp. unc. - Conductivity	± 3.4%	R	√3	0.78	0.71	± 1.5%	± 1.4%	∞
Temp. unc. - Permittivity	± 0.4%	R	√3	0.23	0.26	± 0.1%	± 0.1%	∞
Combined Std. Uncertainty						± 11.2%	± 11.1%	361
Expanded STD Uncertainty						**± 22.3%**	**± 22.2%**	

4.5.8.2 IEC 62209-1/2, 30 MHz – 6 GHz

Error Description	Uncertainty Value	Probability Distribution	Divisor	(c_i) 1g	(c_i) 10g	Std. Unc. (1g)	Std. Unc. (10g)	(v_i) v_{eff}
Measurement System								
Probe Calibration	± 6.55%	N	1	1	1	± 6.55%	± 6.55%	∞
Axial Isotropy	± 4.70%	R	√3	0.7	0.7	± 1.9%	± 1.9%	∞
Hemispherical Isotropy	± 9.60%	R	√3	0.7	0.7	± 3.9%	± 3.9%	∞
Boundary Effects	± 2.00%	R	√3	1	1	± 1.2%	± 1.2%	∞
Linearity	± 4.70%	R	√3	1	1	± 2.7%	± 2.7%	∞
System Detection Limits	± 1.00%	R	√3	1	1	± 0.6%	± 0.6%	∞
Modulation Response	± 2.40%	R	√3	1	1	± 1.4%	± 1.4%	∞
Readout Electronics	± 0.30%	N	1	1	1	± 0.3%	± 0.3%	∞
Response Time	± 0.80%	R	√3	1	1	± 0.5%	± 0.5%	∞
Integration Time	± 2.60%	R	√3	1	1	± 1.5%	± 1.5%	∞
RF Ambient Noise	± 3.00%	R	√3	1	1	± 1.7%	± 1.7%	∞
RF Ambient Reflections	± 3.00%	R	√3	1	1	± 1.7%	± 1.7%	∞
Probe Positioner	± 0.80%	R	√3	1	1	± 0.5%	± 0.5%	∞
Probe Positioning	± 6.70%	R	√3	1	1	± 3.9%	± 3.9%	∞
Post-processing	± 4.00%	R	√3	1	1	± 2.3%	± 2.3%	∞
Test Sample Related								
Device Positioning	± 2.90%	N	1	1	1	± 2.9%	± 2.9%	145
Device Holder	± 3.60%	N	1	1	1	± 3.6%	± 3.6%	5
Power Drift	± 5.00%	R	√3	1	1	± 2.9%	± 2.9%	∞
Power Scaling	± 0%	R	√3	1	1	± 0.0%	± 0.0%	∞
Phantom and Setup								
Phantom Uncertainty	± 7.90%	R	√3	1	1	± 4.6%	± 4.6%	∞
SAR correction	± 1.90%	R	√3	1	0.84	± 1.1%	± 0.9%	∞
Liquid Conductivity (mea.)[DAK]	± 2.50%	R	√3	0.78	0.71	± 1.1%	± 1.0%	∞
Liquid Permittivity (mea.)[DAK]	± 2.50%	R	√3	0.26	0.26	± 0.4%	± 0.4%	∞
Temp. unc. - Conductivity	± 3.40%	R	√3	0.78	0.71	± 1.5%	± 1.4%	∞
Temp. unc. - Permittivity	± 0.40%	R	√3	0.23	0.26	± 0.1%	± 0.1%	∞
Combined Std. Uncertainty						± 12.5%	± 12.5%	748
Expanded STD Uncertainty						± **25.1%**	± **25.0%**	

4.6 SAR Scaling (Reported SAR)

Measured 1g and 10g SAR values are scaled up to the maximum output power including tolerance of the EUT as declared by the manufacturer. Conducted output power measurements are performed to ensure the output power of the EUT is close to the maximum power. After SAR measurements are performed, the measured SAR is scaled up by the delta between the measured output power and the manufacturer's declared maximum output power including tolerance.

The SAR scaling factor is calculated as

$$SAR\ Scaling\ Factor = \frac{Maximum\ Output\ Power\ Including\ Tolerance,\ mW}{Measured\ Output\ Power,\ mW}$$

The reported SAR is

$$Reported\ SAR = Measured\ SAR\ \times SAR\ Scaling\ Factor$$

For Example:

Measured SAR: 1.0 W/kg

Measured output power: 250 mW

Maximum output power including tolerance: 300 mW

SAR scaling factor = 1.2

Reported SAR = 1.2 W/kg

5 Conducted Output Power Measurements

Conducted output power measurements are performed to verify the EUT is transmitting at maximum output power. The power measurements are compared to the manufacturer's declared output power including tolerance.

The following set up is used for conducted output power measurements

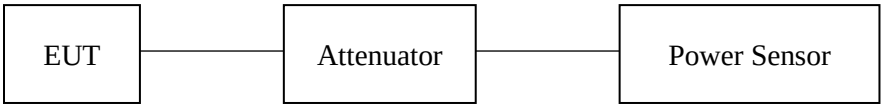

The following path losses were used during conducted measurements. The cable was provided by the manufacturer. The cable loss is estimated.

Frequency (MHz)	Attenuator (dB)	Cable Loss (dB)
2400 – 2483.5	10	0.5

5.1 Bluetooth

Output power is measured using a power meter

Bluetooth v2.1 + EDR – Basic Data Rate / Enhanced Data Rate

		GFSK	π/4 DQPSK	8DPSK	Comments
Duty Cycle		100%	100%	100%	
Ch. 0 / 2402 MHz	Measured Burst Avg. Power (dBm)	12.92	9.92	9.92	Tx Cal gain 0x1b for GFSK Tx Cal gain 0x07 for EDR
	Max Output Power Including Tolerance (dBm)	13	10	10	
Ch. 39 / 2441 MHz	Measured Burst Avg. Power (dBm)	12.98	9.96	9.97	Tx Cal gain 0x16 for GFSK Tx Cal gain set to 0x05 for EDR
	Max Output Power Including Tolerance (dBm)	13	10	10	
Ch. 78 / 2480 MHz	Measured Burst Avg. Power (dBm)	13	9.98	9.97	Tx Cal gain 0x13 for GFSK Tx Cal gain 0x05 for EDR
	Max Output Power Including Tolerance (dBm)	13	10	10	

Bluetooth v4.0 – Low Energy

		GFSK	Comments
Duty Cycle		85.2%	
Ch. 0 / 2402 MHz	Measured Burst Avg. Power (dBm)	12.96	Tx Cal gain 0x1a
	Max Output Power Including Tolerance (dBm)	13	
Ch. 19 / 2440 MHz	Measured Burst Avg. Power (dBm)	12.99	Tx Cal gain 0x13
	Max Output Power Including Tolerance (dBm)	13	
Ch. 39 / 2480 MHz	Measured Burst Avg. Power (dBm)	13	Tx Cal gain 0x10
	Max Output Power Including Tolerance (dBm)	13	

6 SAR Measurement Results

6.1 Liquid Measurements

Liquid measurements are within +/-10% of the target value. The DASY52 software corrects the measured SAR value to the target conductivity and permittivity only when the SAR value will be higher after correction.

Liquid	Date	Frequency	Measured		% Delta	
			Permittivity	Conductivity	Permittivity	Conductivity
HBBL 600-6000V6	August 6, 2019	2400	37.6543	1.79493	-4.1604	2.24302
		2405	37.6467	1.79856	-4.15813	2.19095
		2410	37.6392	1.80217	-4.15551	2.13834
		2415	37.6318	1.80578	-4.15264	2.08563
		2435	37.6012	1.82026	-4.1439	1.88007
		2440	37.5933	1.82389	-4.1422	1.82987
		2450	37.5778	1.83115	-4.13822	1.73075
		2460	37.5625	1.83843	-4.14623	1.51988
		2465	37.5546	1.84208	-4.15065	1.41563
		2480	37.5308	1.85304	-4.16486	1.10812

6.2 System Check

System check is performed within 24 hours before the SAR measurement on the EUT. A SAR measurement is done with a calibrated reference dipole. The measured SAR is normalized to 1 W and compared to the 1 W reference SAR value provided in the calibration report for the dipole. The system check is verified to be within ±10% of the reference SAR value.

1g SAR System Check

Frequency (MHz)	Date	Dipole Input Power (mW)	1 W Normalized 1g SAR (W/kg)	1 W Reference 1g SAR (W/kg)	Difference
2450	August 6, 2019	250	58.8	54.4	8.1%

10g SAR System Check

Frequency (MHz)	Date	Dipole Input Power (mW)	1 W Normalized 10g SAR (W/kg)	1 W Reference 10g SAR (W/kg)	Difference
2450	August 6, 2019	250	26.96	24.9	8.3%

6.3 Test Configurations

The following configurations were tested for SAR.

Configuration #	Exposure Condition	Accessories	Position	Distance
B1	Limb	None	Rear	0 mm
B2	In front of face	None	Front	10 mm

6.4 Limb SAR Results

Bluetooth

Unit	Channel	Frequency (MHz)	Config. #	Power Drift (dB)	Measured 10g SAR (W/kg)	SAR Scaling Factor	Reported 10g SAR (W/kg)	Plot #
Primary	0	2402	B1	-0.07	0.102	1.019	0.104	1
Primary	39	2441	B1	0.02	0.119	1.005	0.120	2
Primary	78	2480	B1	-0.07	0.155	1	0.155	3
Secondary	0	2402	B1	0.18	0.110	1.019	0.112	4
Secondary	39	2441	B1	0.06	0.170	1.005	0.171	5
Secondary	78	2480	B1	0.13	0.199	1	0.199	6

6.5 In Front of Face SAR Results

Bluetooth

Unit	Channel	Frequency (MHz)	Config. #	Power Drift (dB)	Measured 1g SAR (W/kg)	SAR Scaling Factor	Reported 1g SAR (W/kg)	Plot #
Primary	39	2441	B2	0.10	0.127	1.005	0.128	7
Secondary	39	2441	B2	0.01	0.144	1.005	0.145	8

6.6 Measurement Variability

The highest measured 10g SAR was 0.199 W/kg and the highest measured 1g SAR was 0.144 W/kg. Measurement variability is not required.

7 Test Equipment List

Equipment	Manufacturer	Model #	Serial/Inst #	Last Cal mm/dd/yyyy	Next Cal mm/dd/yyyy
2450 MHz Dipole	IMST	diSARA2450	2402103	10/16/2018	10/16/2019
DASY5 Robot	Staubli	TX60L	F13/5R4XC1/A/01	N/A	N/A
DASY5 Robot Controller	Staubli	CS8Cspeag-TX60	F13/5R4XC1/C/01	N/A	N/A
DASY5 Measurement Server	SPEAG	SE UMS 011 DA	1398	N/A	N/A
Data Acquisition Electronics	SPEAG	DAE4	1419	02/01/2019	02/01/2020
SAR Probe	SPEAG	EX3DV4	3957	03/29/2019	03/29/2020
SAM Phantom	SPEAG	QD 000P40 CD	1806	N/A	N/A
ELI Phantom	SPEAG	QD OVA 002 AA	2154	N/A	N/A
Head Liquid 600 MHz – 6 GHz	SPEAG	HBBL	161114-1	N/A	N/A
Dielectric Assessment Kit	SPEAG	DAKS-3.5	1079	02/12/2019	02/12/2020
Submersible Digital Thermometer	LKM Electronic	DTM 3000	3641	06/12/2019	06/12/2019

8 Revision History

The latest revision replaces all previous versions

Revision No.	Date	Reason for change	Author
0	August 7, 2019	Original	J. Sabado
1	March 20, 2020	Finalize with Customer Information	J. Borrott