EMC TEST REPORT

Product Name	Wireless remote control switch
Trade mark	N/A
Model No.	AG-C101
FCC ID:	2AP84AG-C101
Report No.	CTB220719051RFX
Applicant	Shenzhen Champions Technology Co., Ltd. 401, Innovation industrial zone, Xintian,Guanhu street,Longhua district, Shenzhen, Guangdong, China
Manufacturer	Shenzhen Champions Technology Co., Ltd. 401, Innovation industrial zone, Xintian,Guanhu street,Longhua district, Shenzhen, Guangdong, China
Prepared by	Shenzhen CTB Testing Technology Co., Ltd. Floor 1&2, Building A, No. 26 of Xinhe Road, Xinqiao Community, Xinqiao Street, Baoan District, Shenzhen, Guangdong, China.
Date of Receipt	Jul. 13, 2022
Date of Test(s)	Jul. 13, 2022 to Jul. 19, 2022
Date of Issue	Jul. 19, 2022
Test Standard(s)	CFR47, FCC Part 15 Subpart B, ANSI C63.4: 2014
Test Result:	Pass

In the configuration tested, the EUT complied with the standards specified above.

Compiled by:	Reviewed by:	Approved by:
Chen Zheng	Arron Liu	Bin Mei / Director

Note: If there is any objection to the inspection results in this report, please submit a written report to the company within 15 days from the date of receiving the report. The test report is effective only with both signature and specialized stamp. This result(s) shown in this report refer only to the sample(s) tested. Without written approval of Shenzhen CTB Testing Technology Co., Ltd. this report can't be reproduced except in full. The tested sample(s) and the sample information are provided by the client. "*" indicates the testing items were fulfilled by subcontracted lab. "#" indicates the items are not in CNAS accreditation scope.

Table of Contents

1. Description of version 3
2. Test summary 4
3. Measurement uncertainty 5
4. General information 6
   - 4.1. Description of EUT 6
   - 4.2. Description of accessory device 6
   - 4.3. Test conditions 6
   - 4.4. Block diagram of EUT configuration 6
5. List of Test and Measurement Instruments 7
6. Conducted Emission 8
   - 6.1. Limit 8
   - 6.2. Test setup 8
   - 6.3. EMI test receiver setup 8
   - 6.4. Test procedure 8
   - 6.5. Test results 9
7. Radiated emissions 10
   - 7.1. Limit 10
   - 7.2. Test setup 10
   - 7.3. EMI test receiver setup and spectrum analyzer setup 11
   - 7.4. Test procedure 11
   - 7.5. Corrected Amplitude & Margin Calculation 11
   - 7.6. Test results 12
8. Photographs of test setup 14
9. Photographs of EUT 15

1. Description of version

Report No.	Issue Date	Description	Approved
CTB220719051RFX	Jul. 19, 2022	Original	Valid

2. Test summary

Test procedures according to the technical standards:

Standard	Test Item	Test Result
§15.107	Conducted Emission	N/A
§15.109	Radiated Emission	PASS

3. Measurement uncertainty

The reported uncertainty of measurement y ± U, where expended uncertainty U is based on a standard

Test Item	Frequency	Expanded Uncertainty (U_{Lab})
Conducted Emission	150 kHz to 30 MHz	±3.2 dB
Radiated Emission	30 MHz to 1000 MHz	± 4.8 dB

uncertainty multiplied by a coverage factor of k=2, providing a level of confidence of approximately 95 %

4. General information

4.1. Description of EUT

Product name	**Wireless remote control switch**
Trade mark	N/A
Model No.	**AG-C101**
Serial No.	N/A
Model Difference	N/A
max Operating frequency	24MHz
Normal Testing Voltage	DC12V-36V
Configuration	☒ Table-top ☐ Floor-standing
Adapter Information:	/

Note: The above EUT information is declared by manufacturer and for more detailed features description, please refer to the manufacturer's specifications or the User's Manual.

4.2. Description of accessory device

No.	Device Type	Brand	Model	Specification	Note
1	Resistor	Hin hangzhou electronic	RX27-1	N/A	DC
2	Battery	JUXIANG	6-QW-45 (430)-C	N/A	DC

4.3. Test conditions

Temperature: 15-25℃
Relative Humidity: 30-60 %
Atmospheric pressure: 800hPa-1060hPa

4.4. Block diagram of EUT configuration

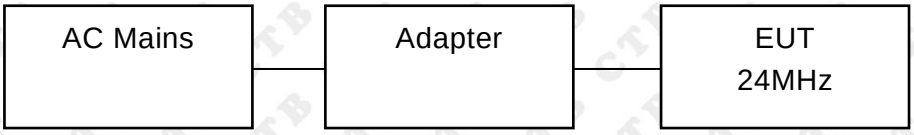

Operating condition of EUT

Operating condition	Mode 1	Working	Test Voltage	AC 120V/60Hz*
Note:This test covers all possible operating modes of the device, only the worst data are list in report. The worst data are shows (*)is the nearest standard limit which were recorded in this report.				

5. List of Test and Measurement Instruments

	Radiated Emission Measurement					
No.	Equipment	Manufacturer	Model No.	Serial No.	Calibrated date	Calibrated until
1	Double Ridged Broadband Horn Antenna	Schwarzbeck	BBHA 9120D	1911	2021.09.27	2022.08.07
2	TRILOG Broadband Antenna	Schwarzbeck	VULB 9168	869	2021.09.27	2022.08.07
3	Amplifier	Agilent	8449B	3008A01838	2021.09.27	2022.08.05
4	Amplifier	HP	8447E	2945A02747	2021.09.27	2022.08.05
5	EMI TEST RECEIVER	ROHDE&SCHWARZ	ESPI7	100362	2021.09.27	2022.08.05
6	Coaxial cable	ETS	RFC-SNS-100 -NMS-80 NI	/	2021.09.27	2022.08.05
7	Coaxial cable	ETS	RFC-SNS-100 -NMS-20 NI	/	2021.09.27	2022.08.05
8	Coaxial cable	ETS	RFC-SNS-100 -SMS-20 NI	/	2021.09.27	2022.08.05
9	Coaxial cable	ETS	RFC-NNS-100 -NMS-300 NI	/	2021.09.27	2022.08.05
10	EZ-EMC	Frad	EMC-con3A1. 1	/	/	/

6. Conducted Emission

6.1. Limit

☒ Except for Class A devices:

Frequency of emission (MHz)	Conducted limit (dBμV)	
	Quasi-peak	Average
0.15-0.5	66 to 56*	56 to 46*
0.5-5	56	46
5-30	60	50

Note: Decreases with the logarithm of the frequency.

☐ For Class A devices:

Frequency of emission (MHz)	Conducted limit (dBμV)	
	Quasi-peak	Average
0.15-0.5	79	66
0.5-30	73	60

6.2. Test setup

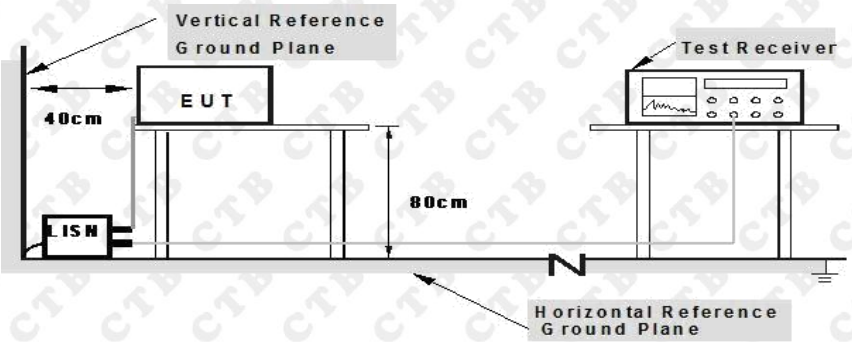

Note: 1.Support units were connected to second LISN.
2.Both of LISNs (AMN) are 80 cm from EUT and at least 80 from other units and other metal planes

The setup of EUT is according with ANSI C63.4 measurement procedure. Specification used with FCC Part 15 limits.

6.3. EMI test receiver setup

Frequency Range	9kHz-30MHz
Resolution Bandwidth	200Hz (9kHz-150kHz) 9kHz (150kHz-30MHz)

6.4. Test procedure

1. Measurement was performed in shielded room, and instruments used were followed clause 4 of ANSI C63.4.
2. Detailed test procedure was following clause 7 of ANSI C63.4.
3. Frequency range 150kHz – 30MHz was checked and EMI receiver measurement bandwidth was set to 9 kHz.

6.5. Test results

N/A

NOTE: This EUT is powered by DC power only, this test item is not applicable

7. Radiated emissions

7.1. Limit

☒ Except for Class A devices (at 3m):

Frequency of emission (MHz)	Field strength (microvolts/meter)	
	(microvolts/meter)	(dBμV/m)
30-88	100	40
88-216	150	43.5
216-960	200	46
Above 960	500	54

☐ For Class A devices (at 10m):

Frequency of emission (MHz)	Field strength (microvolts/meter)	
	(microvolts/meter)	(dBμV/m)
30-88	90	39
88-216	150	43.5
216-960	210	46.4
Above 960	300	49.5

7.2. Test setup

Radiated Emission Test Set-Up Frequency Below 1 GHz

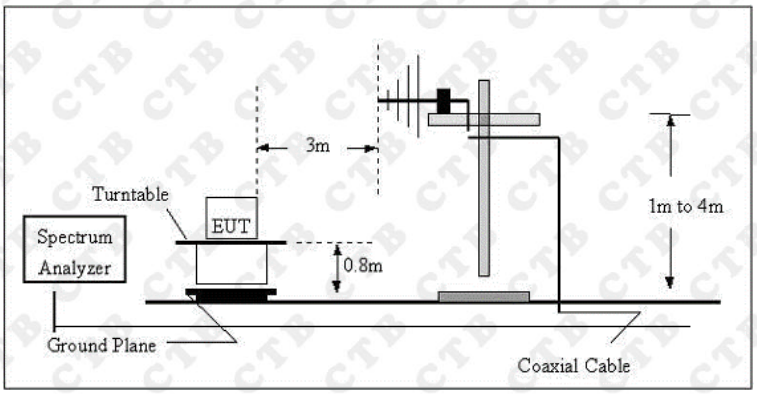

Radiated Emission Test Set-Up Frequency Above 1GHz

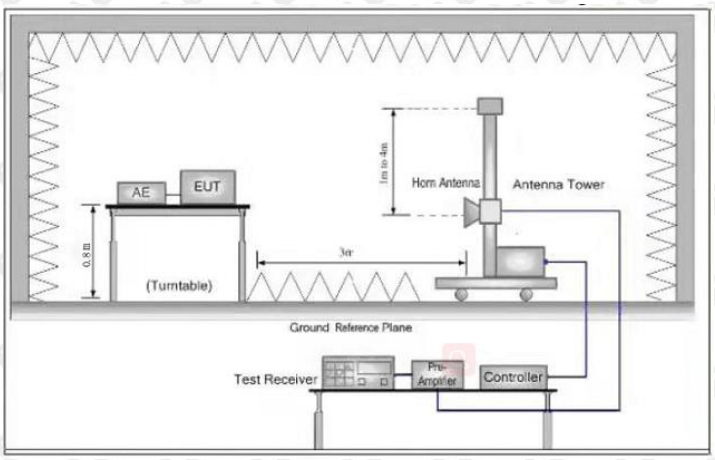

The radiated tests wer performed in 3 meter Charmber test site, using the setup accordance with the ANSI C63.4:2014.

7.3. EMI test receiver setup and spectrum analyzer setup

During the radiated emission test, the EMI test receiver and Spectrum Analyzer were set with the following configurations:

Frequency Range	RBW	Video B/W	IF B/W	Detector
30MHz-1000MHz	100kHz	300kHz	120kHz	QP
Above 1GHz	1MHz	3MHz	/	PK
	1MHz	10Hz	/	AVG

7.4. Test procedure

1. The measurement was performed in a semi-anechoic chamber, and instruments used were followed clause 4 of ANSI C63.4

2. Detailed test procedure was following clause 8 of ANSI C63.4.

7.5. Corrected Amplitude & Margin Calculation

1. The Corrected Amplitude is calculated by adding the Antenna Factor and Cable Loss, and subtracting the Amplifier Gain from the Meter Reading. The basic equation is as follows:

Corrected Amplitude = Meter Reading + Antenna Factor + Cable Loss - Amplifier Gain

2. The “Margin” column of the following data tables indicates the degree of compliance with the applicable limit. For example, a margin of 7dB means the emission is 7dB below the limit. The equation for margin calculation is as follows:

Margin = Limit – Corrected Amplitude

7.6. Test results

Up to 1GHz:

Temperature:	24℃	Relative Humidity:	54 %
Pressure:	101kPa	Polarization :	Horizontal
Test Voltage :	DC 5V	Test Mode:	Mode 1

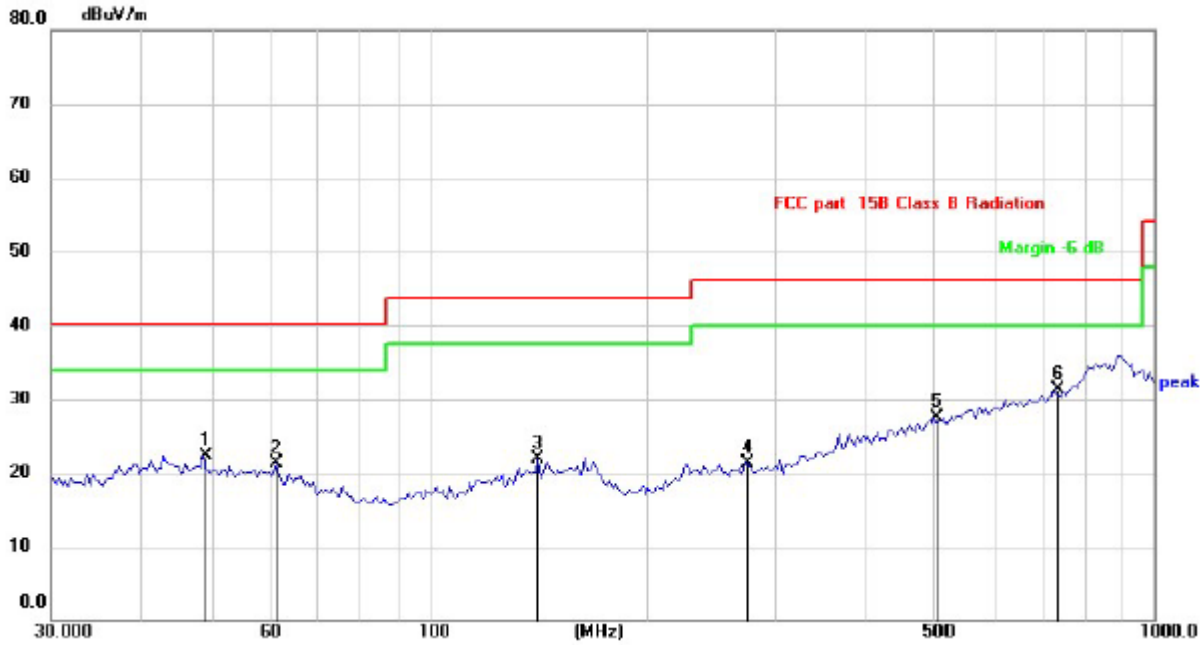

No.	Mk.	Freq.	Reading Level	Correct Factor	Measure-ment	Limit	Over	
		MHz	dBuV	dB	dBuV/m	dB/m	dB	Detector
1		48.5867	27.90	-5.59	22.31	40.00	-17.69	QP
2		61.5618	27.79	-6.44	21.35	40.00	-18.65	QP
3		141.5777	27.39	-5.45	21.94	43.50	-21.56	QP
4		273.2341	26.70	-5.48	21.22	46.00	-24.78	QP
5		500.3011	26.69	0.72	27.41	46.00	-18.59	QP
6	*	729.3583	26.76	4.57	31.33	46.00	-14.67	QP

Note: Result=Reading+Factor
Over Limit=Result-Limit

Temperature:	24℃	Relative Humidity:	54 %
Pressure:	101kPa	Polarization :	Vertical
Test Voltage :	AC 120V/60Hz	Test Mode:	Mode 1

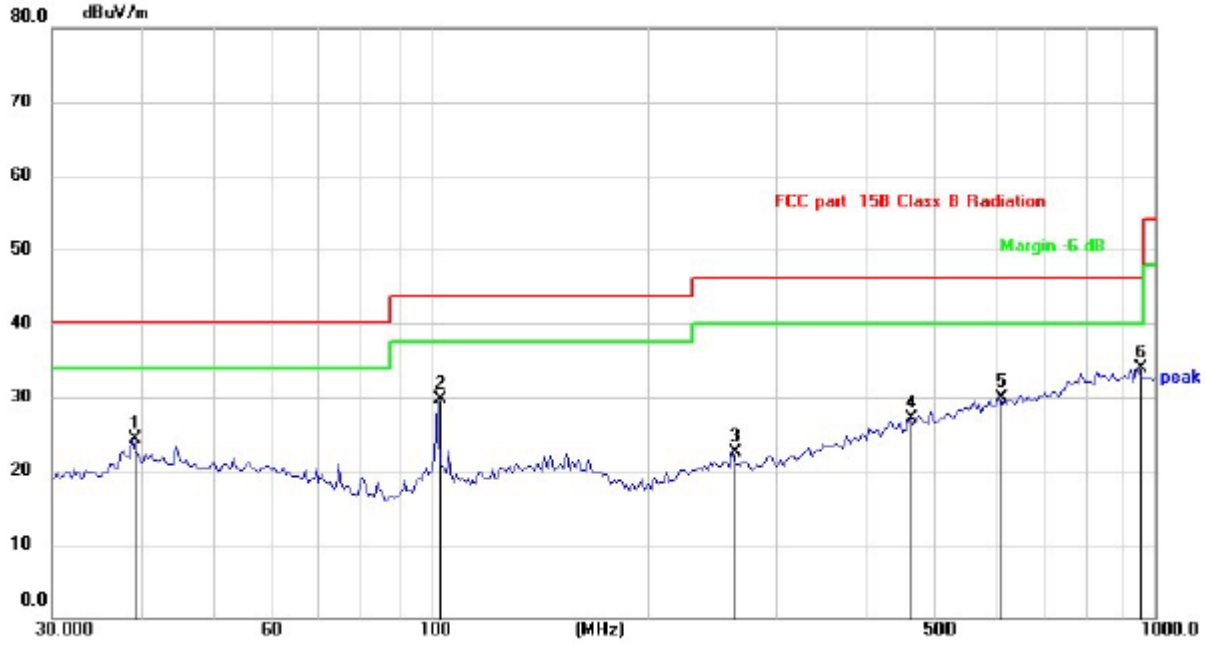

No.	Mk.	Freq.	Reading Level	Correct Factor	Measure-ment	Limit	Over	
		MHz	dBuV	dB	dBuV/m	dB/m	dB	Detector
1		38.6839	29.99	-5.59	24.40	40.00	-15.60	QP
2		102.3597	38.23	-8.49	29.74	43.50	-13.76	QP
3		261.5164	28.11	-5.59	22.52	46.00	-23.48	QP
4		462.3455	27.21	-0.19	27.02	46.00	-18.98	QP
5		606.7221	27.28	2.66	29.94	46.00	-16.06	QP
6	*	948.7610	28.04	5.91	33.95	46.00	-12.05	QP

Note: Result=Reading+Factor
Over Limit=Result-Limit

8. Photographs of test setup

Radiated Emission

9. Photographs of EUT

EUT photo 1

EUT photo 2

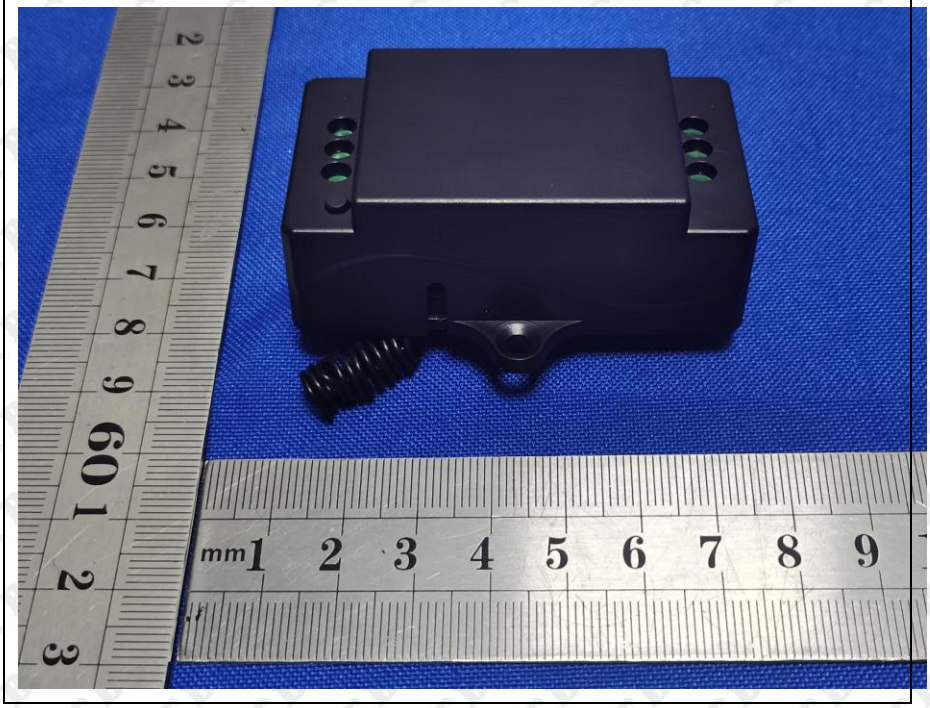

EUT photo 3

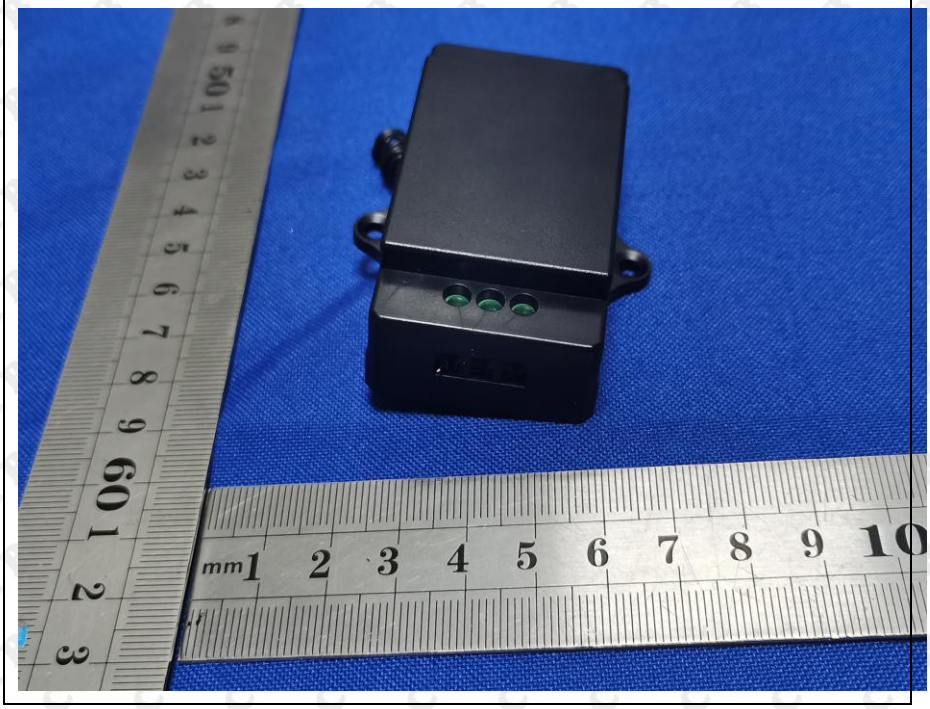

EUT photo 4

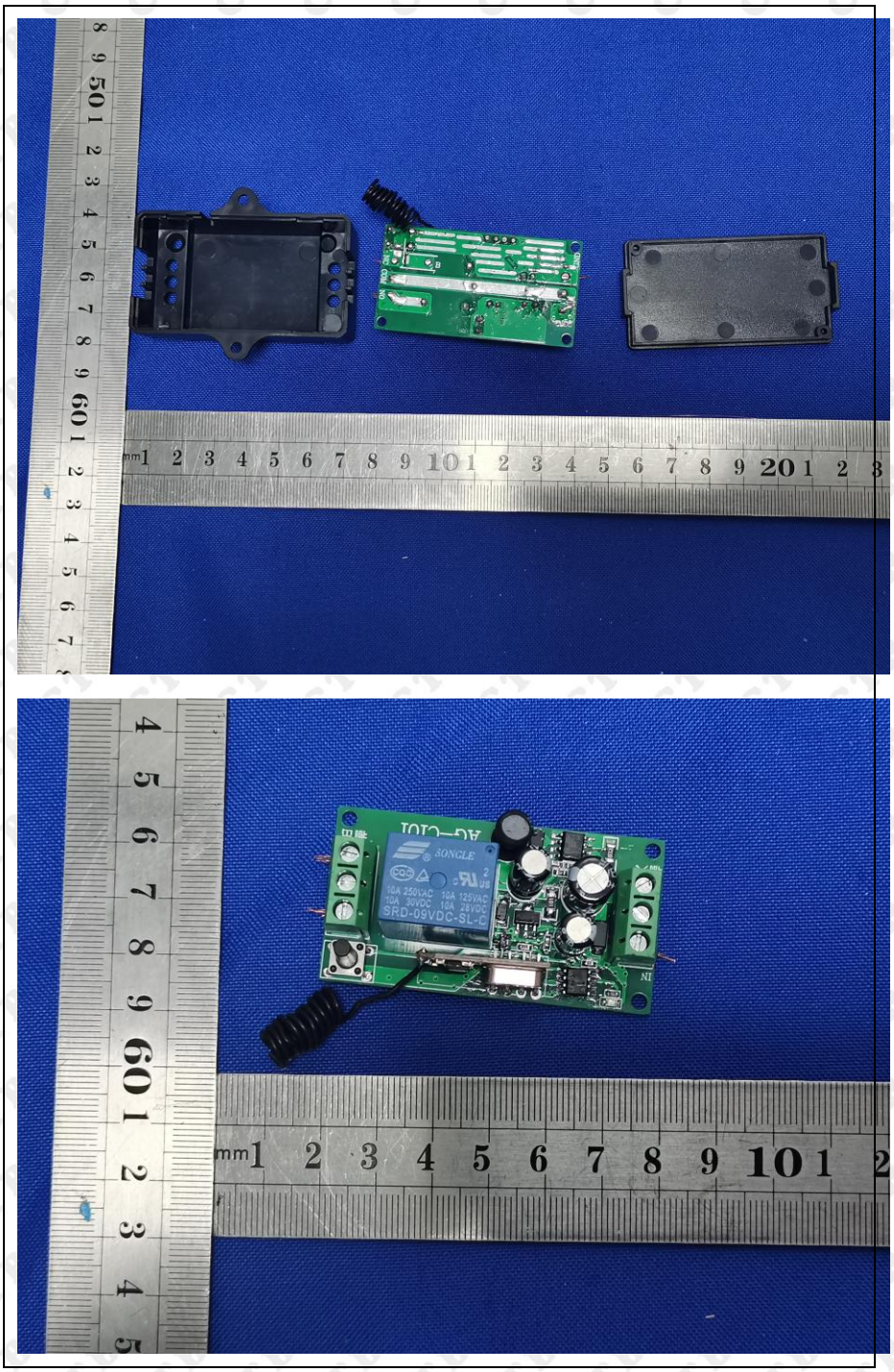

EUT photo 5

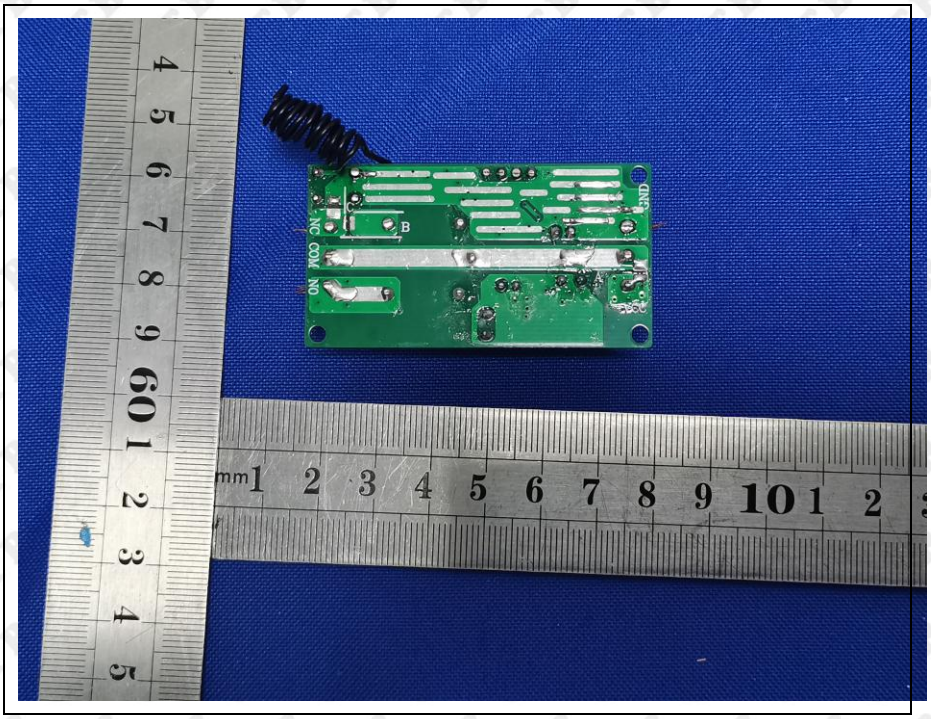

End of report