HMC Holdings LLC

FWC-301

User Guide

Version 01.01.02

CONFIDENTIAL

Revision History

Version #	Remark	Date (MM/DD/YYYY)	Done by
01.01.01	Initial draft	Aug 18,2019	Jatin Bhatt
01.01.02	Update Header and Footer	Aug 21,2019	Jatin Bhatt

CONFIDENTIAL

Table of Contents

1. **Introduction: 4**
2. **Block Diagram: 4**
3. **Exterior View of FirstWatch CPU: 7**
4. **Internal View of FIRSTWATCH CPU 8**
5. **End Application of FirstWatch CPU: 9**

Electronics Safe 9

6. **Electrical Specification: 11**
7. **Agency Certifications 12**

CONFIDENTIAL

1. Introduction:

HMC Holding has developed FirstWatch CPU (FWCPU) which will use for Electronics safe and access control products.

FirstWatch CPU contains 2.4GHz and 915 MHz Radio. 2.4GHz radio is used for communication over Bluetooth 5.0 Low Energy a and 915 MHz radio is used for communication with remote control.

Its powered by 4.5V to 10V DC voltage.

2. Block Diagram:

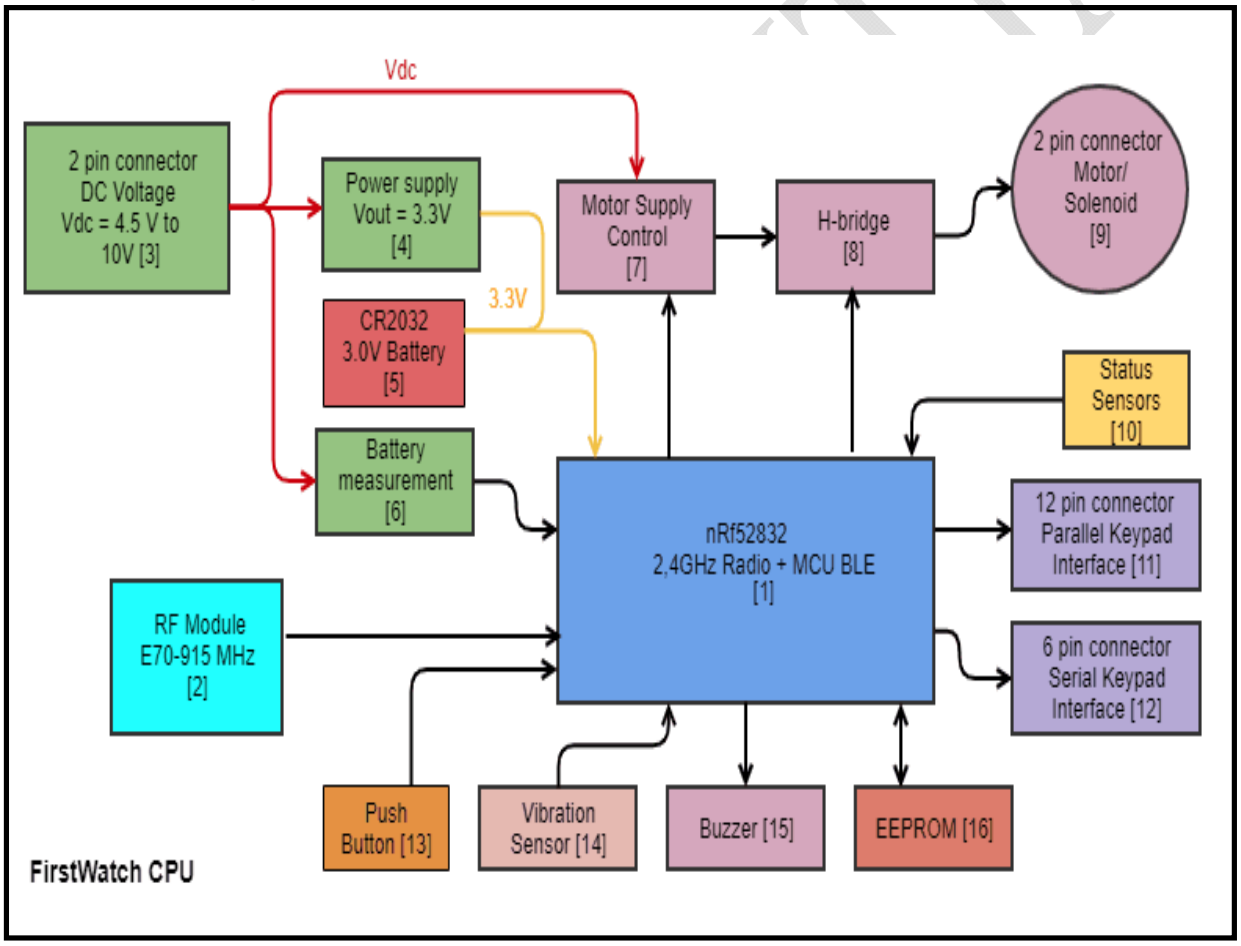

Figure 1 Block diagram of FirstWatch CPU

1. **nRF52832 2.4GHz Radio + MCU**

The nRF52832 SoC is a powerful, highly flexible ultra-low power multiprotocol SoC ideally suited for Bluetooth® Low Energy applications. The nRF52832 SoC is built around a 32-bit ARM® Cortex™-M4F CPU with 512kB + 64kB RAM. The embedded 2.4GHz transceiver supports Bluetooth Low Energy.

nRF52832 is connected with Chip Antenna which cannot changed by end user. Max transmitting RF power is 4dBm.

2. **E70-915MHz Trans Receiver**
   The CC1310 device is a Sub-1 GHz family of cost-effective, ultra-low-power wireless MCUs. The CC1310 device combines a flexible, very low power RF transceiver with a powerful 48-MHz Cortex®-M3 microcontroller in a platform supporting multiple physical layers and RF standards. A dedicated Radio Controller (Cortex®-M0) handles low-level RF protocol commands that are stored in ROM or RAM, thus ensuring ultra-low power and flexibility. The low-power consumption of the CC1310 device does not come at the expense of RF performance; the CC1310 device has excellent sensitivity and robustness (selectivity and blocking) performance.

   (FCC ID: 2ALPH-E70, This module is FCC approved, Manufacture By : E-BYTE)

3. **DC Voltage**
   FirstWatch CPU is powered by DC voltage from 4.5V to 10V. DC voltage can be provide by Battery or AC/DC converter. DC Voltage is apply to FirstWatch CPU using **J11** connector

4. **Power Supply**
   FirstWatch CPU has on board DC-DC voltage regulator which will convert 4.5V to 10V DC input voltage to 3.3V voltage which is required for nRF52832 and CC1310 and its associated circuits.

5. **CR2032 – Coin Cell battery**
   FirstWatch CPU has RTC (in nRF52832) feature which will store date and time. CR2032 battery will provide power to nRF52832 while external power supply is not present.

6. **Battery measurement**
   Battery measurement module will monitor supply voltage and report to nRf52832. If battery voltage is less then 4.5V then FirstWatch CPU will give low battery indication to end user.

7. **Motor Supply Control**
   This section will control motor supply voltage. Normally, Motor section will not get powered from Battery. nRF52832 will control this section.

8. **H-Bridge**
   An H bridge is an electronic circuit that enables a voltage to be applied across a load in opposite direction. These circuits are used to allow DC motors to run forwards or backward or activate Solenoid

9. **Motor/Solenoid**
   Using **J3** connection, User can connect DC motor or solenoid with FirstWatch CPU. Maximum allowable current of Motor/Solenoid is 0.5A (peak) for few Seconds.

10. **Status Sensors**

CONFIDENTIAL

Status sensors are used when FirstWatch CPU will use in Door Lock. Hall Effect Sensor is used for getting latch's status.

11. **12 pin connectors**
    User can connect matrix keypad and leds using this 12 pin connector. This connector will use for interface between Exterior unit with FirstWatch CPU board when it will use in Door lock. Its reference designator on FirstWatch CPU board is **J2.**

12. **6 pin connectors**
    User can connect serial keypad or third party controller using this connector. nRF52832 will communication with external hardware using I2C/UART 2 wire communication. This interface is used for exterior unit of Safe with FirstWatch's CPU board.

13. **Push button**
    User can connect external switch using SW1 connector.

14. **Vibration Sensor**
    SW-420 based sensor, normally closed type vibration sensor is used in FirstWatch CPU board for detect any vibration event. This vibration sensor will use for Burglary protection system.

15. **EEPROM**
    24FC64 (24XX64*) is a 64 Kbit Electrically Erasable PROM (EEPROM). The device is organized as a single block of 8K x 8-bit memory with a 2-wire serial interface. EEPROM is used for store configuration parameter and user management.

CONFIDENTIAL

3. Exterior View of FirstWatch CPU:

FIRSTWATCH ENCLOSURE TOP VIEW

FIRSTWATCH ENCLOSURE BOTTOM VIEW

Figure 2 Exterior view of FWCPU

CONFIDE

4. Internal View of FIRSTWATCH CPU

FIRSTWATCH INTERNAL PCBA VIEW

Figure 3 Internal view of FWCPU

5. End Application of FirstWatch CPU:

Below are few examples of FWCPU in Gun Safe.

Electronics Safe

1. Application

Figure 4 **FirstWatch Safe 24 Gun**

Description

Fire Resistant: 1,400 degrees Fahrenheit for 30 Minutes, Fire-Retardant Carpet Lined interior and Height Adjustable Shelves, Removable Steel Shipper,3.2 mil Epoxy Polyester Powder Coat Paint Finish, Chrome Plated Lever For Easy Opening, Plastic Barrel Rest Kits Included, Lifetime Limited Warranty for Peace of Mind, Gun Capacity May Vary Based on Size and Type of Firearm

CONFIDENTIAL

2. Application

Figure 5 Firstwatch Safe 54 Gun

Description:

Fire Resistant: 1,400 degrees Fahrenheit for 45 Minutes, Includes Retractable USB Entry and Manual Trouble Keys, Fire-Retardant Carpet Lined interior and Height-Adjustable Shelves, 4-Way Locking System with 7 Live Action Bolts and 3 Stationary Bolts (1.5″ Diameter), Removable Steel Shipper17 Pouch Vinyl Organizer On Inner Door (Holds 9 Hand Guns), 3.2 mil Epoxy Polyester Powder Coat Paint Finish Reinforced Steel Door Jamb for Added Security, Spoke Lever for Easy Opening, Plastic Barrel Rest Kits Included, Lifetime Limited Warranty for Peace of Mind, Gun Capacity May Vary Based on Size and Type of Firearm

FirstWatch CPU will install in plastic enclosure as per figure# 3 and 4 and use as an Electronics Safe – control unit. It will do user authentication using keycode, USB key, Mobile or remote control. After do authentication it will do lock/unlock operation.

CONFIDENTIAL

6. Electrical Specification:

Absolute Maximum Ratings[1]

Symbol	Description	Minimum	Maximum	Unit
VDD	Input Supply Voltage	4.5V	10V	V

Note 1: Under no circumstances should exceeding the ratings specified in the Absolute Maximum Ratings section be allowed. Stressing the module beyond these limits may result permanent damage to the module that is not covered by the warranty.

General Characteristics

Characteristic	Description
Model Name	SRC301
Product Description	FirstWatch CPU(BLE)
Dimension	
Interface	SPI, TWI, UART, Parallel IO,I2C
Operating temperature	-25°C to +65°C
Storage temperature	-25°C to +65°C
Humidity	Operating Humidity 10% to 95% Non-Condensing Storage Humidity 5% to 95% Non-Condensing
Weight	15 g +/- 0.01g

CONFIDENTIAL

7. Agency Certifications

FCC STATEMENT

FCC ID: 2AP9FFWC301

Contains FCC ID: 2ALPH-E70

1. This device complies with Part 15 of the FCC Rules. Operation is subject to the following two conditions:

(1) This device may not cause harmful interference, and

(2) This device must accept any interference received, including interference that may cause undesired operation.

2. Changes or modifications not expressly approved by the party responsible for compliance could void the user's authority to operate the equipment.

This equipment has been tested and found to comply with the limits for a Class B digital device, pursuant to part 15 of the FCC Rules. These limits are designed to provide reasonable protection against harmful interference in a residential installation. This equipment generates, uses and can radiate radio frequency energy and, if not installed and used in accordance with the instructions, may cause harmful interference to radio communications. However, there is no guarantee that interference will not occur in a particular installation. If this equipment does cause harmful interference to radio or television reception, which can be determined by turning the equipment off and on, the user is encouraged to try to correct the interference by one or more of the following measures:

—Reorient or relocate the receiving antenna.

—Increase the separation between the equipment and receiver.

—Connect the equipment into an outlet on a circuit different from that to which the receiver is connected.

—Consult the dealer or an experienced radio/ TV technician for help.

FCC Radiation Exposure Statement:

This equipment complies with FCC radiation exposure limits set forth for an uncontrolled environment. In order to avoid the possibility of exceeding the FCC radio frequency exposure limits, Human proximity to the antenna shall not be less than 20cm (8 inches) during normal operation.

CONFIDENTIAL