User Manual for Folding E-scooter

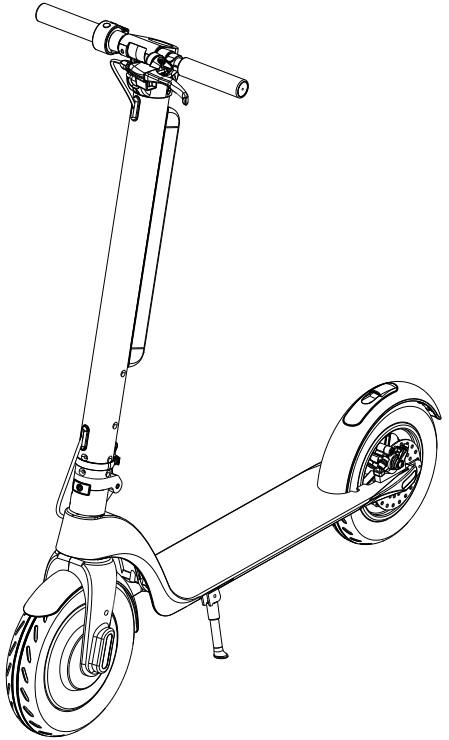

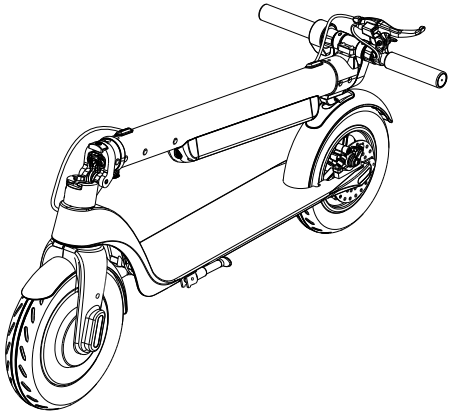

About the manual

- Thank you for choosing and purchasing our electric scooter series products!
- The manual introduces the safe operation instructions and precautions of the electric scooter. Please read them carefully before using them for the first time. If it is not used according to the manual, it may bring danger. Our company will not bear any responsibility for the personal injury or property loss caused by it!
- For the safety, please read the manual carefully before use to ensure correct and safe driving!
- If you have any questions in the use process, or can not get the information you need from the manual, please contact your dealer in time!

⚠ Please keep the manual properly for reference at any time!

FCC Compliance Statements

This device complies with Part 15 of the FCC Rules. Operation is subject to the following two conditions:
(1) this device may not cause harmful interference, and
(2) this device must accept any interference received, including interference that may cause undesired operation.
Note: This equipment has been tested and found to comply with the limits for a Class B digital device, pursuant to Part 15 of the FCC Rules. These limits are designed to provide reasonable protection against harmful interference in a residential installation. This equipment generates, uses and can radiate radio frequency energy and, if not installed and used in accordance with the instructions, may cause harmful interference to radio communications. However, there is no guarantee that interference will not occur in a particular installation.

If this equipment does cause harmful interference to radio or television reception, which can be determined by turning the equipment off and on, the user is encouraged to try to correct the interference by one or more of the following measures:
-- Reorient or relocate the receiving antenna.
-- Increase the separation between the equipment and receiver.
-- Connect the equipment into an outlet on a circuit different from that to which the receiver is connected.
-- Consult the dealer or an experienced radio/TV technician for help.
Caution: Changes or modifications not expressly approved by the party responsible for compliance could void the user's authority to operate the equipment.
This equipment complies with FCC radiation exposure limits set forth for an uncontrolled environment.
This transmitter must not be co-located or operating in conjunction with any other antenna or transmitter.

Content

1.Safety Notes..... 3-5
2.Product Introduction 6-10
3.How to ride..... 11-12
4.Battery Instruction..... 13-14
5.Parameter 15
6.Maintenance..... 16
7.Trouble shooting..... 17
8.Packing List 17
9.Product Quality Certificate 18
10.Product Warranty Card..... 18

Safety Notes

1.1 About safety

There's risk for any vehicle, including e-scooter. For your safety, please learn to ride safely and obey the local rules and enjoy the riding.

- Before riding the scooter, please check whether the fastening screws of the body are loose, and whether there are sharp edges on the exterior decorations and movable parts, whether the brake, vertical lever folding buckle, front and rear lights,and tire pressure are normal. If there is any abnormality, please stop riding and contact your dealer for repair!
- Please do not do anything that may harm other people or their properties with e-scooter.
- Any conversion of the e-scooter is prohibited as it will change its performance or damage the structure, which may bring serious injury.
- Please do not put the electric scooter in the water, which will not only damage the electric scooter, but also cause a safety accident.
- It is forbidden to attach any load to the handlebar, which will affect the stability of the vehicle.
- Avoid riding in areas with heavy traffic or overcrowded areas. Pay attention to giving way to pedestrians politely.
- Please don't lend the electric scooter to the user who hasn't read the manual to avoid accidents, because you have the responsibility to ensure the safety of new users!
- Electric scooter is only for users over 14 years old!
- Electric scooter is only for personal use, not for acrobatics or extreme sports!
- Only accessories or spare parts certified by manufacturer can be used for maintenance. Using spare parts not certified by manufacturer may damage the vehicle or cause danger!

1.2 Safety Precautions

Please note that you may lose balance, crash or fall down when you ride an e-scooter. To avoid injury, you should be familiar with this manual and keep the e-scooter in good condition.

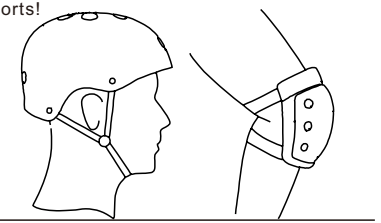

⚠ WARNING!
You must wear a helmet and protective gear before riding.

⚠ Do not ride on rainy days or over water roads to avoid danger.

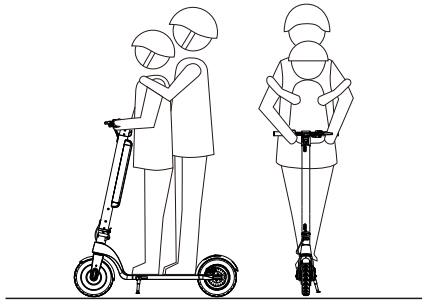

⚠ It is forbidden add goods on the pedal except the rider. It is forbidden for many people to ride a scooter at the same time.

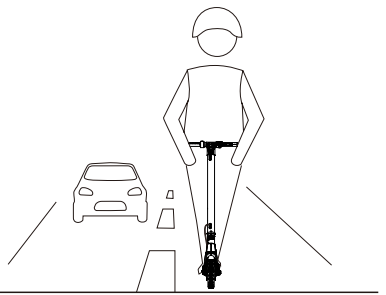

⚠ Do not ride on Vehicle road.

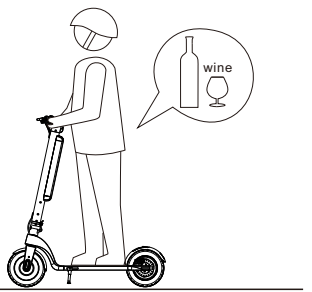

⚠ Do not ride after drinking or taking medicine.

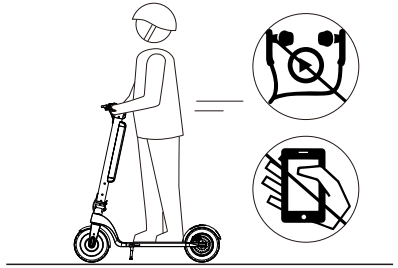

⚠ Do not call or listen to music when you ride the e-scooter.

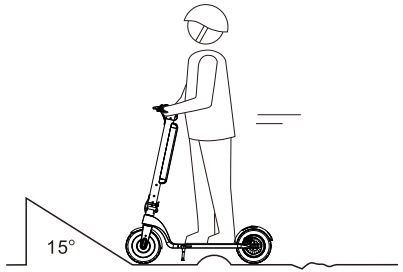

⚠ Be careful of the road with roadblock, sandstone, ponding, mud, wet, ice and snow, slope (angle >15°) stairs, dark area when you are riding.

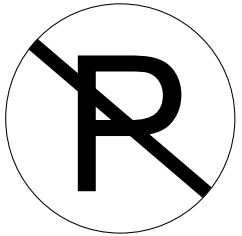

⚠ Do not park in the building foyer, evacuation corridor or safety exit.

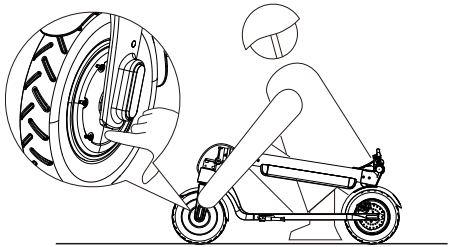

⚠ After riding for a long time, the motor hub and disc brake disc would be possible with high temperature. Don't touch them directly to avoid scalding!

Production Introduction

2.1 Overall View

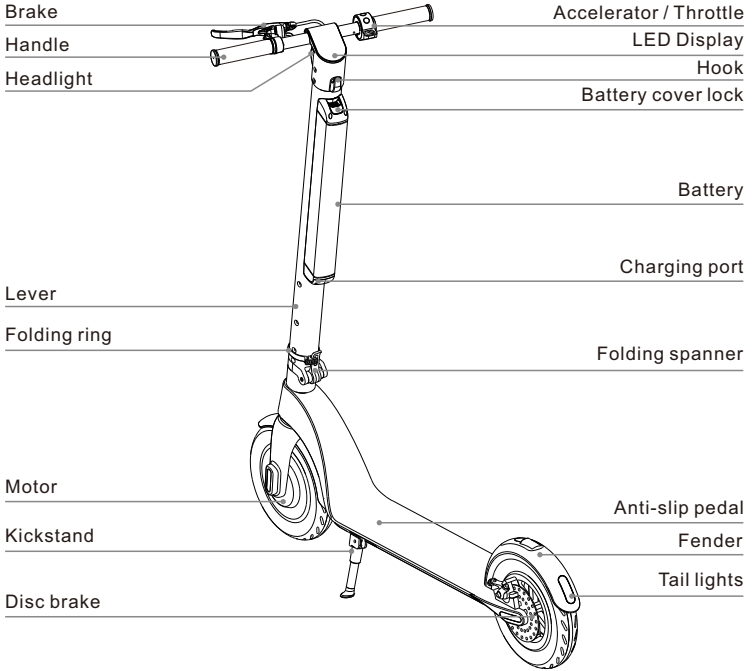

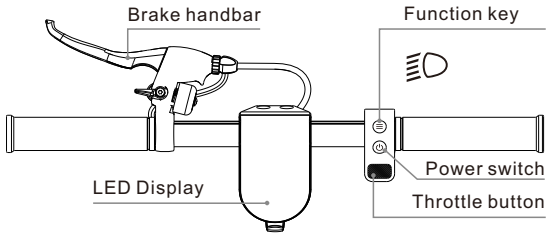

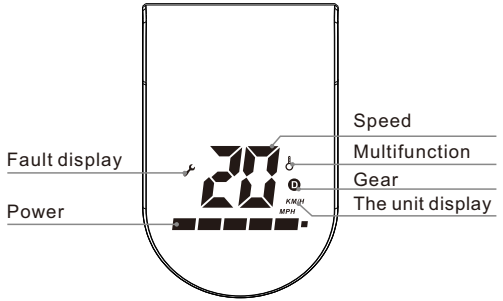

LED display

Instructions of Buttons

1. **Power Switch:**Long press the power button to turn on/off.
2. **Function key:**

A: Short press the function key once: Cycle to switch gears.
Pedestrian mode: Gear indicator Ⓓ is not displayed. The pedestrian indicator flashes in breathing state.
Normal mode: Gear indicator Ⓓ shows white.
Sports mode: Gear indicator Ⓓ shows red.

B: Short press the function key twice: turn on / off the front and rear lights. When the front lights are on, the taillights are always on.

3. **Accelerator:** Press the acceleration button to start and accelerate.
4. **Brake:**Hold the brake handle to brake. Lightly step on the rear fender to assist the brakes.
5. **Cruise mode:** after the constant speed cruise function is turned on, maintain the current vehicle speed for 6 seconds (vehicle speed ≥ 6km / h).Enter the cruise mode automatically, and exit the cruise mode when pressing the acceleration dial again or holding the brake firmly.

2.2 Pre-assembly instructions

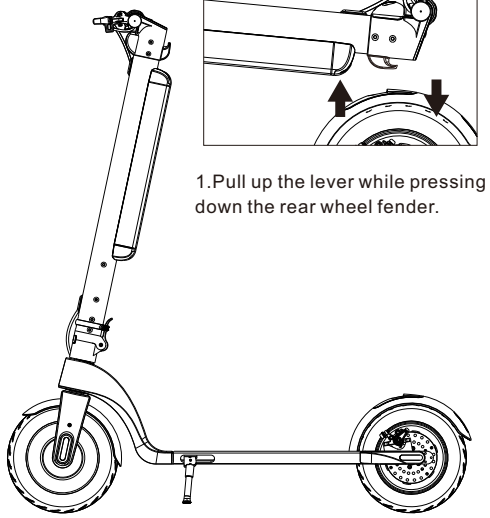

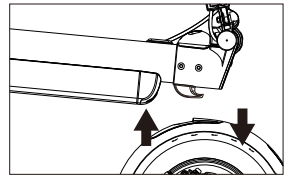

1.Pull up the lever while pressing down the rear wheel fender.

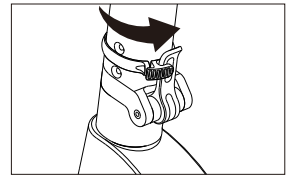

2.Fasten the folding spanner and use the folder fixing ring to fix the folder wrench.

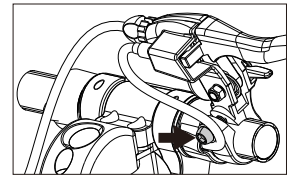

3.Fix the brake lever with M5 hex wrench.

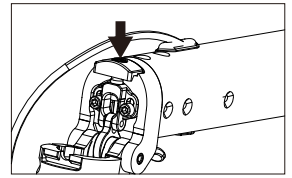

5.During riding , the fixed buckle may be loose. At this time, just need to adjust the screw with clockwise.

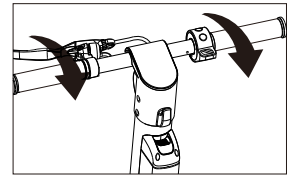

4.Tighten handlebars(Pay attention to the direction of rotation when tighten).

2.3 Folding chart

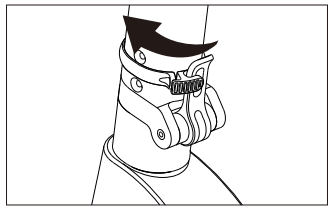

1.Loosen the folder fixing ring.

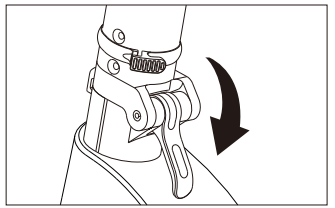

2.Open the folder wrench.

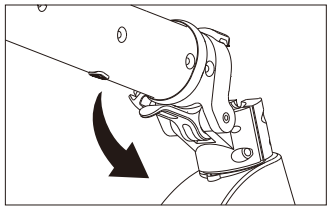

3.Open the folder wrench and lower the pole.

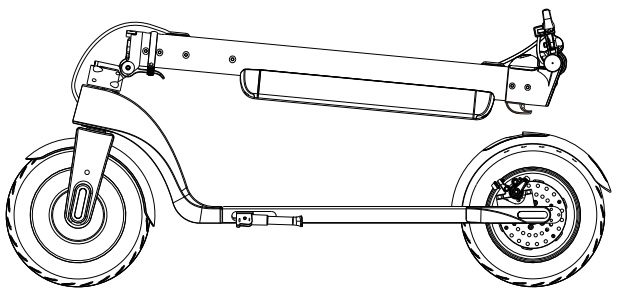

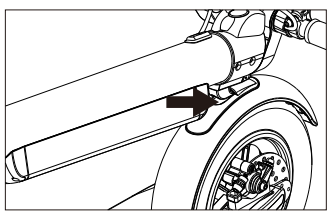

4.Align the hook with the hole of the rear fender and press down.

2.4 How to uninstall / install the battery

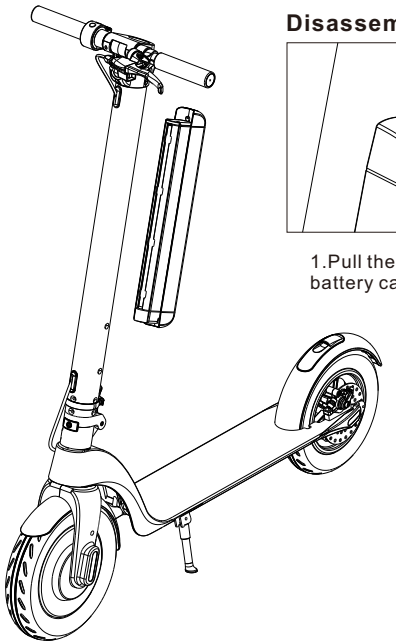

Disassembly

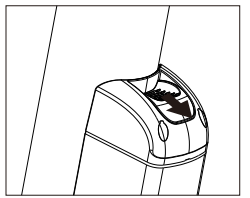

1.Pull the lock on the battery case.

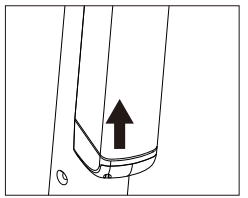

2.Push the battery up from the bottom.

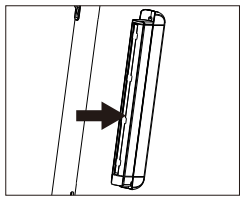

3.After pushing the battery up, then pull it out horizontally.

Install

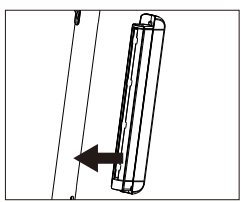

1. Insert the battery horizontally into the pole.

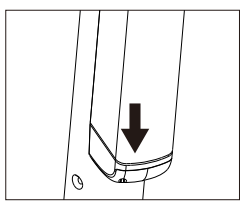

2. Push down until the lock latch of the battery box is tightened.

How to ride the scooter

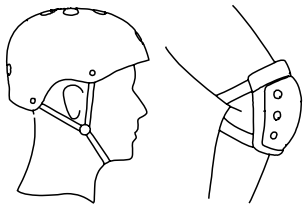

Please wear helmet, kneecap,
elbow-pad when you learn to ride the scooter.

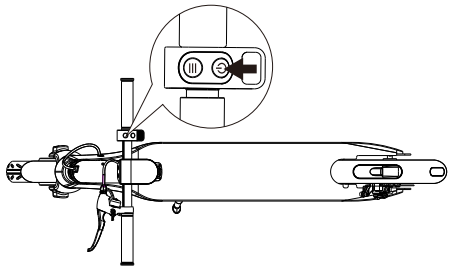

1.Long-press the power button for 2seconds.

2.Stand on the pedal with single foot, press the acceleration dial, and push the other foot backward.

3.When the electric scooter starts to slide, the other foot needs step on the pedal to keep stable riding.

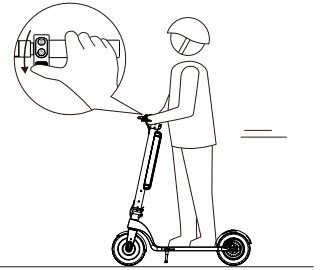

4.Continue to press the thumb shifter to speed up, turn the grip to adjust the direction.

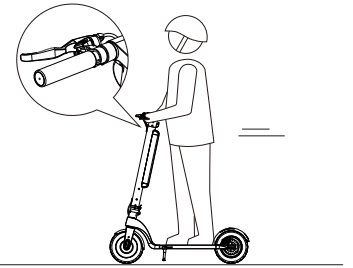

5.Hold the brake handle tightly to slow down and stop.

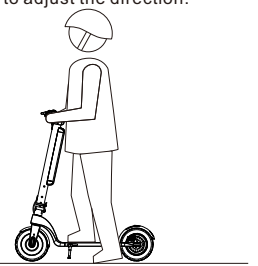

6.When the scooter slows down and stops, put down one foot and get off the scooter normally.

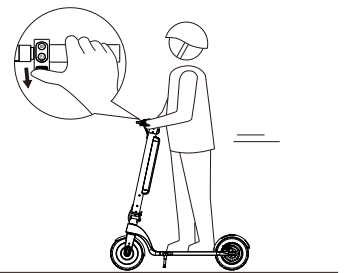

7.Before getting familiar with the performance of the scooter, please do not ride at high speed to avoid accidents and dangers.

Note

1.When riding in rainy and snowy days, the braking distance will be extended, so it is necessary to slow down;
2.When riding, please keep a proper speed and try not to brake in an emergency. When braking in an emergency, the grip of the tire will be weakened, and the car may slip swing, and other dangerous situations, which will cause serious injury to the rider!

Battery Instruction

This is about how consumers charge and maintenance , also hereby listed the detailed spec of battery for your info, please refer to this manual well and follow so as to keep long lifespan, performance for the battery.

4.1 Battery Parameters

Name	Parameter	Name	Parameter	Name	Parameter
Type	Li-ion battery	Working Temperature	0℃-35℃	Store Time（-10℃-40℃）	3 months (full charge)
Charging Time	5-7 hours	Charging Temperature	0℃-35℃	Initial Volume	7.8Ah/10Ah
Voltage	36V	Max Charging Voltage	42V	Max Charging Current	2A

4.2 Warns for battery

1.The battery must be charged and used within the temperature range required by the battery specification to make the electric scooter work stably and efficiently.
2.Please make sure you take off the charger when you install the battery to prevent any danger from happening.
3.It is never allowed to dissolve or impale the battery, also make sure NO metal stuff go contact with the battery pin electrode, otherwise it might break the battery .
4.It is forbidden to disassemble or pierce the battery pack casing to avoid short circuit caused by metal objects contacting the battery contacts, otherwise it may cause battery damage or personal injury.
5.It is potentially causing fire or explosion if water entering battery circuit, thus stop using the battery in case this happening and go to the after sale immediately.
6.You are only allowed to charge the battery with the original adaptor packed, otherwise it will be causing any unexpected consequence.
7.If finding the battery broken and smells bad or felt hot, you need to stop using and keep the battery away from other stuffs.
8.It helps prolong the lifespan if storing battery after 100% fully charged
9.It is not allowed to store the battery under -20°C or higher 50°C condition.
10.You have to charge it to at least 80% capacity if battery not used more than 30 days. Better to charge it 100% full every 90 days to protect the battery function.
11.It will help prolong the battery lifespan significantly that you charge well accordingly to the manuals after every driving instead of running it out. At room temperature, the battery can play a higher range and performance. But battery life and performance will degrade if used at temperatures below 0℃. Typically, the range may be half or less than at room temperature at -10°C.
12.Do not charge and park electric scooters in residential buildings. Keep away from combustibles when charging, and the charging time should not be too long.

13.Improper disposal of used batteries may seriously pollute the environment. Please abide by local regulations when disposing of this battery.

⚠ When the internal temperature of the battery exceeds 50°C, the battery is in a protected state and cannot be charged.
⚠ After fully charged, the electric scooter exhausts its stored power after about 90-120 days of standby. If it is not charged in time, it may cause damage to the battery due to excessive discharge. This damage is unrecoverable and it is beyond of our warranty.

4.3 Charging step

- Open the charging port cover, Make sure the charging port is clean and dry.
- Connect the charger with the battery and the other end with power(100V-240V;50/60Hz), make sure the charging indicator is on.
- When the indicator light on the charger changes, indicating that the charging process is normal, otherwise check if the line connection is good.
- When the indicator on the charger has color change, it indicates that the battery has been filled to 99%, Please stop charging; long time over charge will affect the battery life.

Charging method:

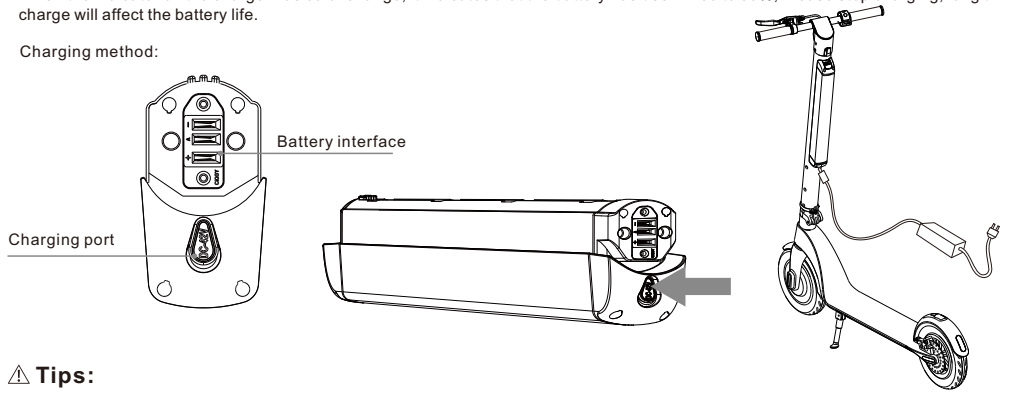

⚠ Tips:

Remove the battery to open the silicone charging port, plug the charger DC plug into the battery charging port; plug the power cord into the charger, then connect the other port to the socket (100V-240V; 50/60Hz), and confirm the charger indicator is on normally.

Cover the charging port with the anti-dust cap in case some metal may touch the charging port and bring short-circuit after charging finished.

Specification

Item	8.5 inch	10 inch
Product	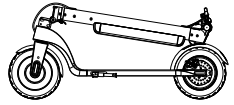	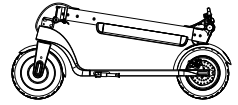
	Scooter Specification	
Unfolded size	1073*401*1176mm	1083*401*1186mm
Folded size	1073*401*450mm	1083*401*460mm
Height from pedal to ground	110mm	115mm
Net weight	14.5kg	15kg
	Basic Information	
Capacity	36V/7.8Ah or 10Ah	36V/7.8Ah or 10Ah
Moto power	36V/350W	36V/350W
Mileage per charge	30-45km	30-45km
Max speed	25km/h	25km/h
Max loading	100kg	100kg
Climbing angle	15°	15°
	Charger Specification	
Input voltage	100-240Vac	100-240Vac
Frequency	50-60Hz	50-60Hz
Output voltage	42V	42V
Output current	2A	2A
Store temperature	-10℃-35℃	-10℃-35℃

Maintenance

Maintenance considerations:

- Make sure the electric scooter charger and charging line are disconnected and ensure that the electric scooter is off.
- Wipe the shell with a soft cloth to clean the electric scooter. Please don't put more lubricating oil on bearing when you do the maintenance for it.
- It is recommended to check the tire pressure before driving to ensure driving safety.
  Tire pressure standard: 320kpa ~ 340kpa.
- Please check the brake system and tire are vulnerable parts at least once a month. When the brake performance and tire grip are reduced, please contact the dealer to replace the corresponding parts.
- Please do not replace the accessories which not provided by manufacturer without permission, to avoid the safety hazard caused by the inconsistency for accessories with the scooter.
- It is forbidden to clean electric scooters by using water cannon or soaking in liquid. This will cause permanent damage of the electronic devices in the host.
- In order to protect the user's safety, the user can not take apart the electric scooter, otherwise, the user will give up the maintenance warranty rights of the product automatically.

⚠ Storage

- Please charge your electric scooter before storage, for preventing the battery from discharging too long time. Please ensure charge at least once every three months.
- If the storage environment temperature is lower than 0 ℃, please don't charge electric scooter. Please put it in inside environment temperature (above 10 ℃) and then charge, storage temperature is - 10 ℃ to 35 ℃.
- Please keep the electric scooter in a suitable place indoor, dry and appropriate temperature. You can mask the electric scooter to prevent from the dust.

Trouble shooting

Please contact the sales office or the dealer with no hesitate for repair when the electric scooter fails to ride normally.

Description of adverse phenomena	Solution
unable starting up	Check to see if the battery is powered
can not charge	1.Check whether the plugboard has electricity; 2.Check the charger whether connect AC plug (the light whether is on); 3.Check the plug of the charger and the charging port of the whole scooter have been inserted correctly.
No horn、no blue tooth signal	Check the bluetooth switch whether turn on.

Packing List

Electric scooter packing list:

E-scooter: 1PC

Charger: 1PC

Manual: 1PC

Screws & Wrench: 1set

Please contact us with no hesitate if there is any breakage or missing when you open package. We will replace it for you as soon as possible.

Have a nice day!

Product Quality Certificate

This product is qualified by passing QC inspection and allowed to be sold on the market.

The warranty card (It takes effect upon manufacturer's seal and passing with serial number) regular sales invoice is effective maintenance certificate. Please keep the warranty card properly.

Release date:

QC Qualified Seal:

Product Warranty Card

User Files

User Name		Gender		Age	
Address					
Telephone				Zip	
Purchase Site					
Purchase Price			Serial Number		
Commodity And Specifications			The User Signature		
Dealers Signature					

We shall provide warranty service due to non-artificial quality problems.

1. One year warranty to the main body including handlebar stem, Motor, Charger…
2. Battery is 6 months warranty period,
3. Plastic Decorative cover, rubble Handlebar ,rear wheel is not in the scope of warranty.
4. All of damage by man—made(open the housing,tear off the sticker,unnormally using),or losing this card we will not guarantee.