FORHOPE

XM1000S

Instruction Manual

Table of Content

Installation Instruction--------1

Product Diagram----------2

Receiver----------2

Transmitter----------3

Specification and Parameters--4

Frequency chart----------5

UI Introduction---------- 6...10

APP Introduction---------11...13

Warning---------- 14

Installation Instruction

Foreword:Please refer to following installation diagram before using.

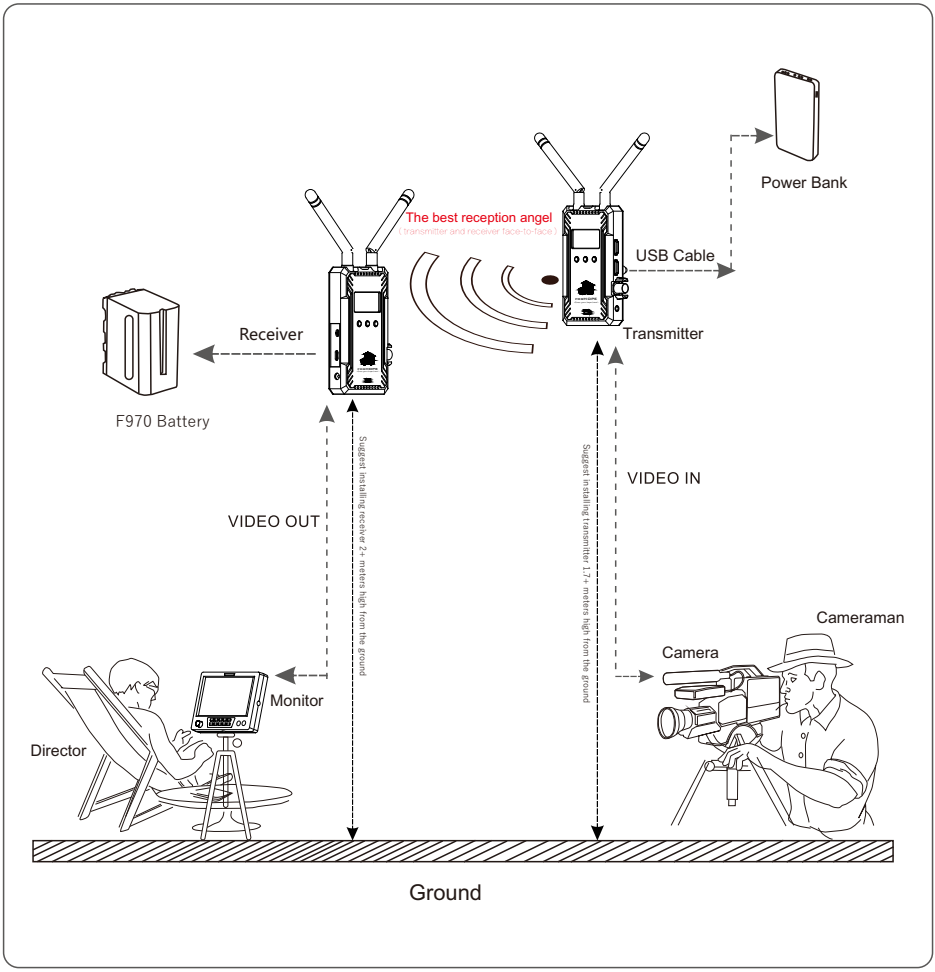

Product Diagram

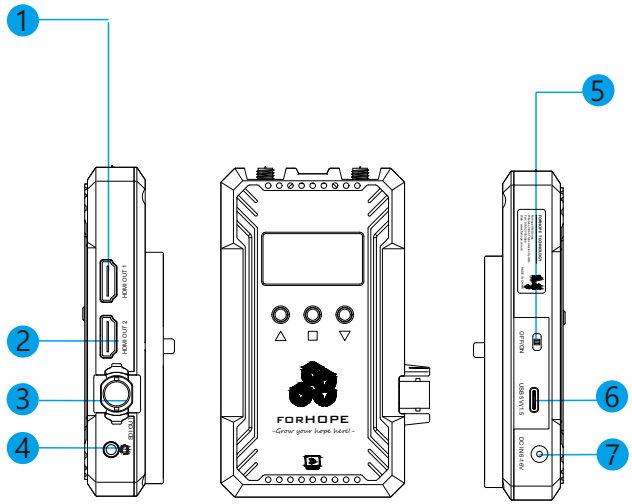

Receiver:

1：HDMI Output 1

2：HDMI Output 2

3：SDI Output

4：3.5mm Earphone Port

5：Power On/Off

6：USB Power Input/ Firmware Update

7：DC Power Input

Product Diagram

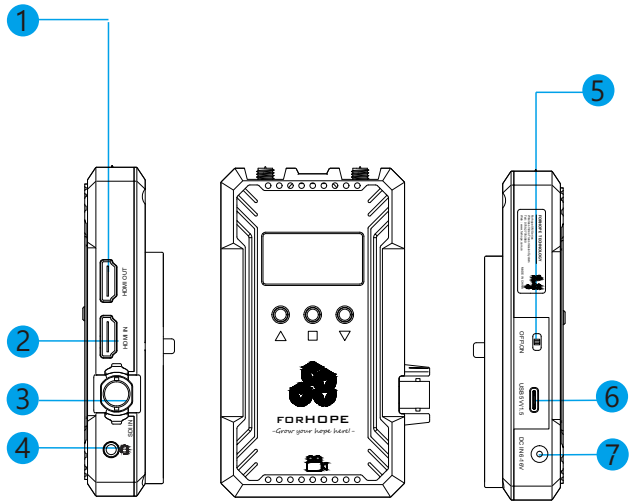

Transmitter:

1：HDMI Loop-out

2：HDMI Input

3：SDI Input

4：3.5mm Earphone Port

5：Power On/Off

6：USB Power Input/ Firmware Update

7：DC Power Input

Specifications and Parameters

	Transmitter	Receiver
Interface	SDI Input(BNC Female); HDMI Input; HDMI Loop-out(output SDI or HDMI audio video); 2 x Antenna Ports(PR-SMA Male) 3.5mm Aux Port(4 pole); DC Input(2.0mm DC Female) Type-C Female	SDI Output(BNC Female); 2 x HDMI Output; 2 x Antenna Ports(PR-SMA Male); 3.5mm Aux Port(4 pole); DC Input(2.0mm DC Female); Type-C Female
Supply Voltage Range	5-17V (DC Input, F970 Battery, Type-C 5V,1.5A Input)	5-17V (DC Input, F970 Battery, Type-C 5V,1.5A Input)
Power Consumption	< 7.5W	< 6.5W
Dimension	(L×W×H) : 66*118*22mm , Don't include antennas and battery plate	(L×W×H) : 66*118*22mm , Don't include antennas and battery plate
Net Weight	W:0.2kg , Don't include antennas	W:0.2kg , Don't include antennas
Input/Output Video Format	HDMI : 480P60,576P60,720P50/59.94/60, 1080I50/59.94/60, 1080P23.97/24/25/29.97/30/50/59.94/60 ; HDMI Type A SDI: 480P60,576P60,720P50/59.94/60, 1080I50/59.94/60, 1080P23.97/24/25/29.97/30/50/59.94/60 ; 1×BNC	HDMI : 480P60,576P60,720P50/59.94/60, 1080I50/59.94/60, 1080P23.97/24/25/29.97/30/50/59.94/60 ; HDMI Type A SDI: 480P60,576P60,720P50/59.94/60, 1080I50/59.94/60, 1080P23.97/24/25/29.97/30/50/59.94/60 ; 1×BNC
Frequency Band	802.11N(HT20) 5180-5250Mhz/5745~5825MHz	802.11N(HT20) 5180-5250Mhz/5745~5825MHz
Modulation Mode	OFDM	OFDM
Transmission Power	Maximum 17dBm	/
Receiving Sensitivity	/	-87dBm
Latency	Min0.08s	Min0.08s
Intercom Frequency Response Range	20Hz～20KHz	20Hz～20KHz
Temperature Range	0 ~ 40°C (working temperature); -20~60°C(storage temperature)	0 ~ 40°C (working temperature); -20~60°C(storage temperature)

UI Introduction

1.Startup Screen

The startup screen is as above. When the device runs, it will display main menu.

2.Main menu

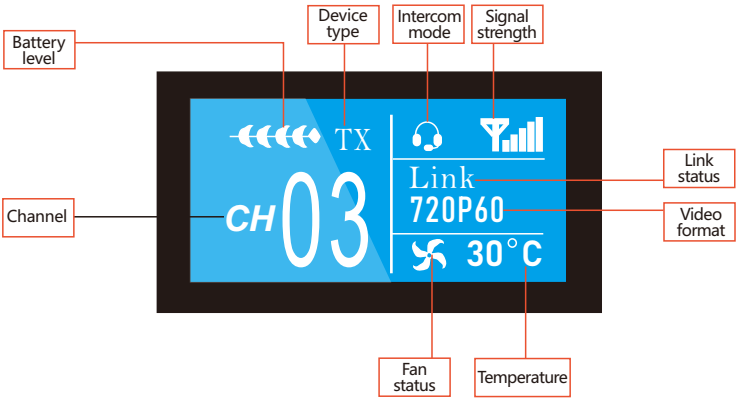

Main menu includes the following informations.Channel, Device type(TX/RX), Link status, Signal strength, Video format, intercom mode, Battery level, Temperature, Fan status.

1) Channel switch: Press "△" or "▽" to change channels. Press "□" to confirm the channel.
2) Press and hold the "△" on transmitter, the screen will display device name and password. Press and hold the "△" on receiver, the screen will also display device name and password if it's connected to transmitter.

3.Secondary menu

Press and hold the "□" for 2s to enter into secondary menu.

Press and hold the "□" for 2s again to back to main menu.

Press "△" or "▽" to switch the options in secondary menu and press "□" to confirm selection.

1) Device(transmitter only): device type. Can switch between TX(transmitter) and RX(receiver) manually.

2) Souece(transmitter only): Switch the sources between HDMI and SDI on transmitter. SDI input is selected by default if both HDMI and SDI sources are connected.;

3) FAN Status: switch between ON and OFF to turn on or off the fan.

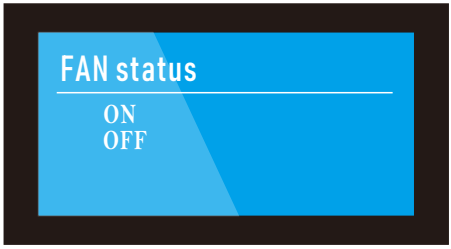

5) WPS: pairing. To pair transmitter and receiver.

6) Priority: to choose high image quality prior or low latency prior;

7) WIFI_SSID: showing device name and password.

8) Version: showing the device's version number.

9) Web: manufacturer's web address

10) Telephone: after-sales Tel number.

APP Operation Instruction

1. APP installation

Search "希望麦田" at Apple APP store or "ForHope" at Google Play Store to download and install APP.

2. Connect smart devices to transmitter

After the transmitter is powered on, go to Settings-Wireless & networks on smart phone/tablet, select the transmitter's name and input the password to connect the devices. Please find transmitter's name and initial password as below. Then go to APP home page and click Video to monitor.

（No need to input password again if it was saved on smart phone/tablet）

Device name: XWMT_5G_xxxx
Password:12345678

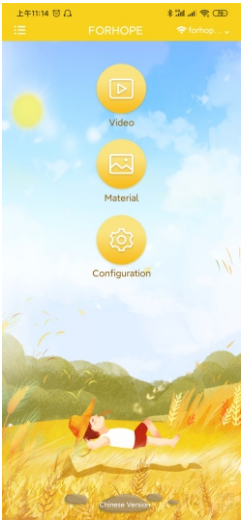

3. APP Operation

b.Click VIDEO on home page to enter into monitoring mode. Click DISPLAY at the bottom of screen. It will show SCREEN CAPTURE, RECORD(only available for Android at present), MATERIAL, CONFIGURATION.

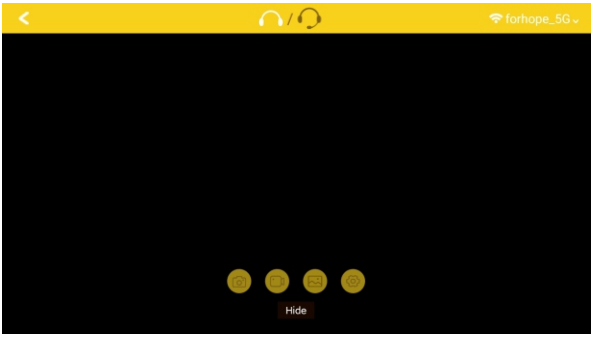

Press and hold the screen to show up the professional monitoring menu. P.S. Only monochrome, False Color and Center Mark are available at present. Other features are under development.

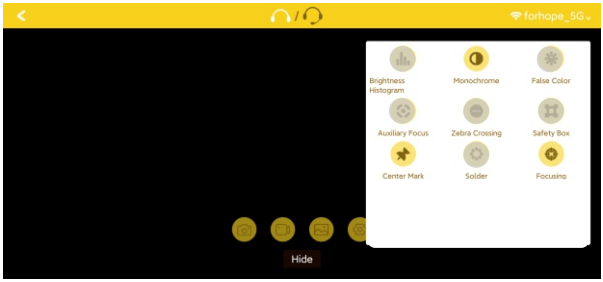

3. APP Operation

c.Click MATERIAL to check the images and videos saved on smart phone/tablet.

d.Click CONFIGURATION to access configuration screen.

e.Click the 英文版/Chinese Version at the bottom of home page to change language.

Warning

1. Cautions

■Meaning of warning icons.

⚠ Caution, Notice, Warning, Dangerous, remind to be careful during operation..

■Cautions

- Do not expose this device to extreme hot, cold, dusty or humidenvironments.
- Do not scratch the device with sharp objects.
- Do not drop this device from high place, as this may cause hardware damage.
- This device is designed for non-waterproofing. Please do not allow any liquid to penetrate into the device.
- Do not attempt to dismantle, open or repair this device by non-technical person,as this may cause permanent damage to the device.

FCC Caution

This device complies with part 15 of the FCC Rules.
Operation is subject to the following two conditions:
(1) This device may not cause harmful interference,
and (2) this device must accept any interference received,
including interference that may cause undesired operation.
Any Changes or modifications not expressly approved by
the party responsible for compliance could void the user's
authority to operate the equipment.
Note: This equipment has been tested and found to comply
with the limits for a Class B digital device, pursuant to part
15 of the FCC Rules. These limits are designed to provide
reasonable protection against harmful interference in a
residential installation. This equipment generates uses and
can radiate radio frequency energy and, if not installed and
used in accordance with the instructions, may cause harmful
interference to radio communications. However, there is no
guarantee that interference will not occur in a particular
installation. If this equipment does cause harmful interference
to radio or television reception, which can be determined by
turning the equipment off and on, the user is encouraged to
try to correct the interference by one or more of the following
measures:
-Reorient or relocate the receiving antenna.
-Increase the separation between the equipment and receiver.
-Connect the equipment into an outlet on a circuit different
from that to which the receiver is connected.
-Consult the dealer or an experienced radio/TV technician
for help.

Radiation Exposure Statement
This equipment complies with FCC/IC radiation exposure limits set forth for an uncontrolledenvironment. This equipment should be installed and operated with minimum distance 20cm between the radiator & your body