IMPORTANT SAFETY INSTRUCTIONS

When using this electrical furnishing, basic precautions should always be followed, including the following:

1. To reduce the risk of electric shock, the product has a special plug
2. Always unplug the product from electrical outlet before cleaning
3. Keep cord away from heated surfaces
4. Do not use outdoors
5. Do not operate where aerosol (spray) products are being used or where oxygen is being administered.
6. Do not touch moving parts or hot parts such as pumps, lights, , reflective surfaces, and the like.
7. To disconnect, remove plug from outlet.
8. Do not place or submerge base, cord, plug, or Light Hood in water or other liquid to clean it.
9. Do not allow water to contact hot LED Grow Lights.
10. Children should be supervised to ensure they do not playwith the appliance.
11. This product is intended for household and residential use only. This product is not approved for commercial applications
12. Never operate furnishing with air openings blocked. Keep air openings free of lint, hair, and the like.

Included in Package

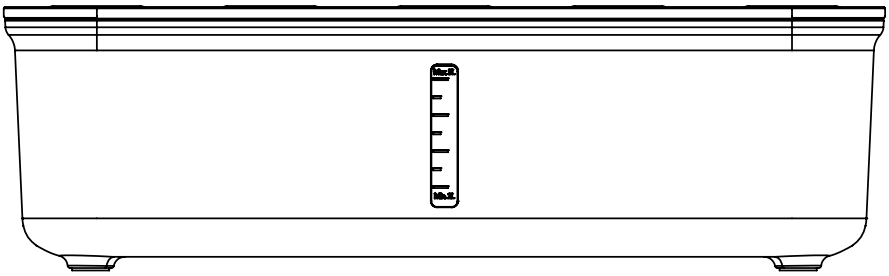

Water Tank x1

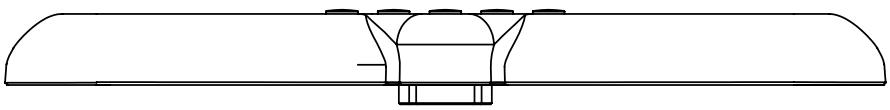

Light Hood x 1

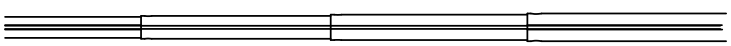

Light Post x 1

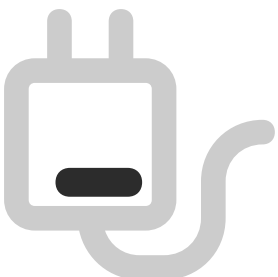

Power adapterx 1

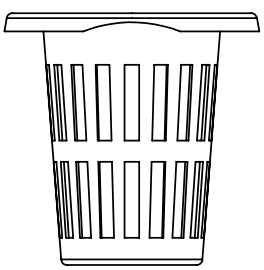

Plant cup x 14

Grow domes x 14

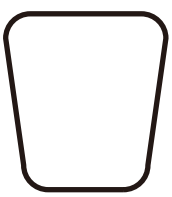

Seed pots x 14

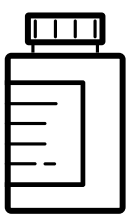

Nutrients x 2

Welcome to your Smart Garden

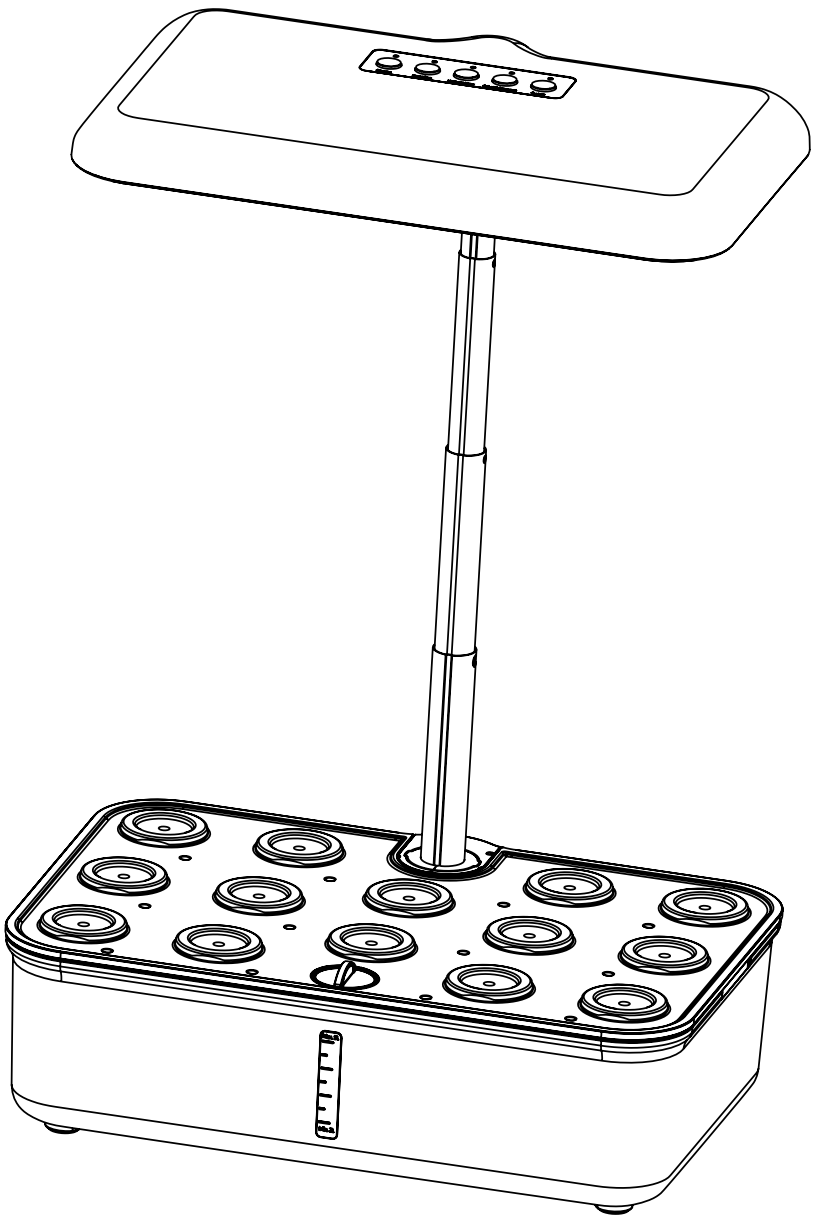

Product introduction

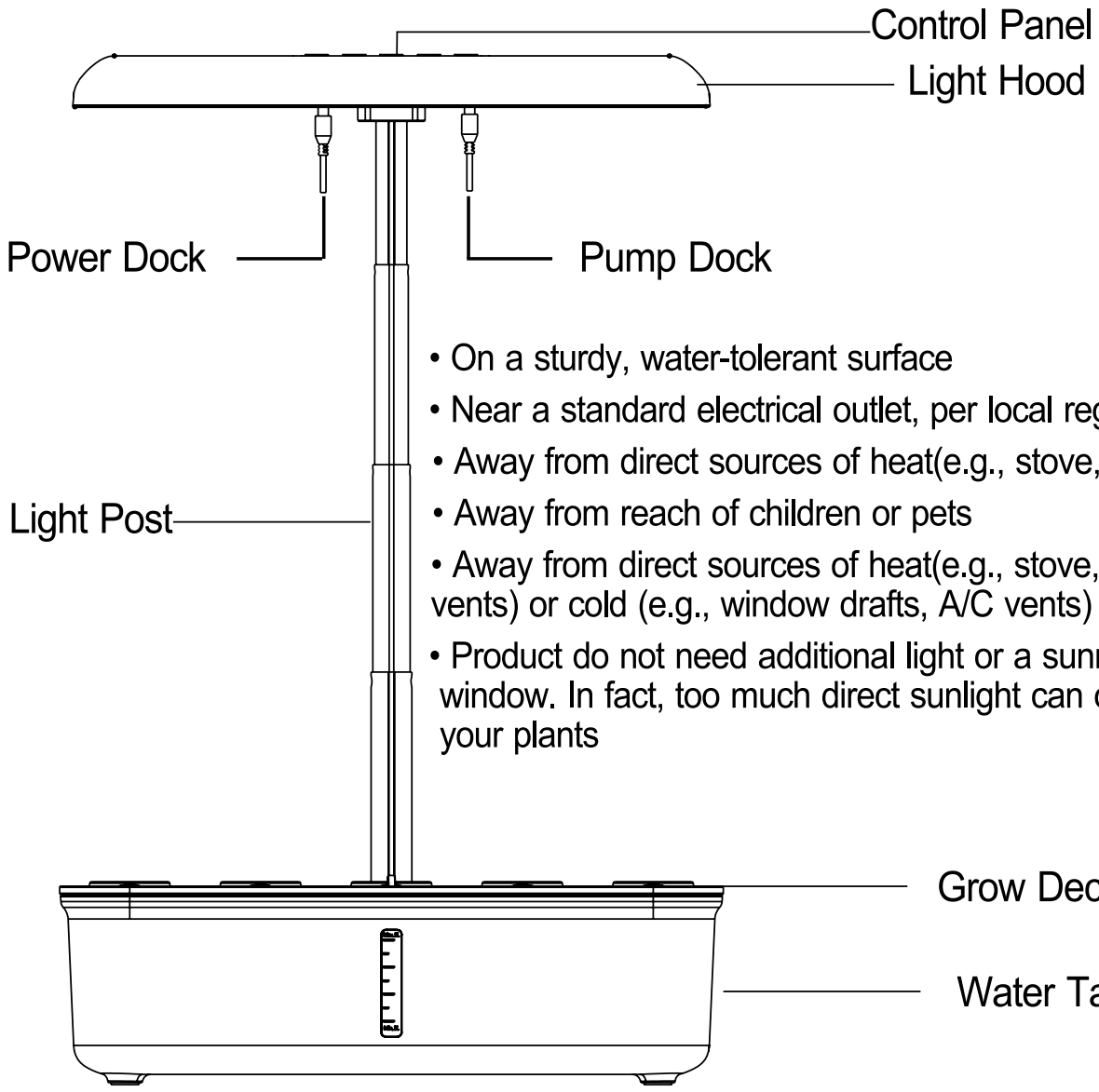

- On a sturdy, water-tolerant surface
- Near a standard electrical outlet, per local regulations
- Away from direct sources of heat(e.g., stove,
- Away from reach of children or pets
- Away from direct sources of heat(e.g., stove,furnace vents) or cold (e.g., window drafts, A/C vents)
- Product do not need additional light or a sunny window. In fact, too much direct sunlight can overheat your plants

- Front View -

Easy Steps

1 Insert Light Post into Base

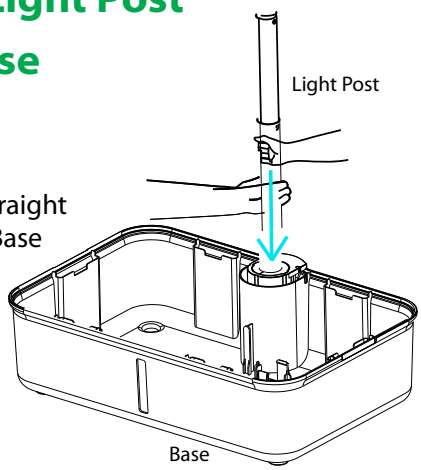

Push Light Post Straight down firmly into Base

2 Insert Grow Deck into Base

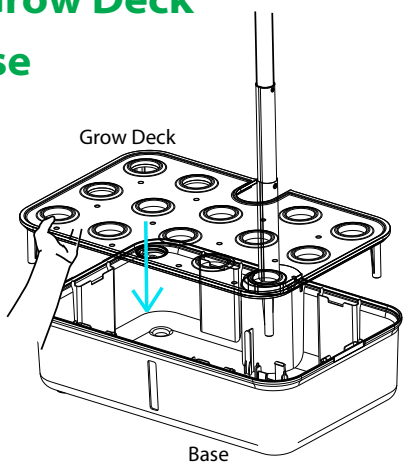

3 Place Light Hood onto Light Post

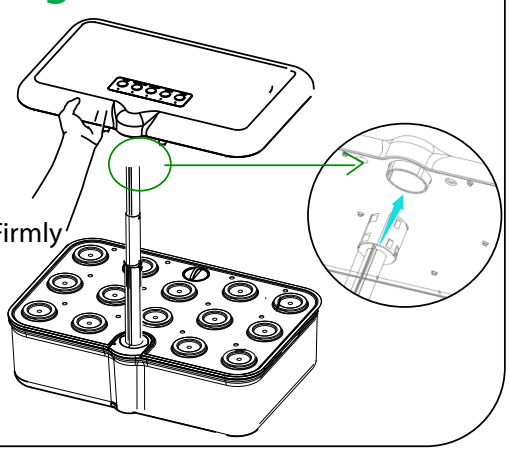

Push Light Hood Firmly on to Light Post

4 Plug LIght and Pump Cord into Light Hood

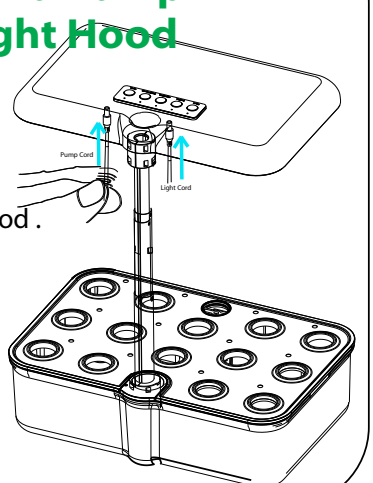

Push Light and Pump Cord flrmly into socket in Light Hood . Do not connect Light Hood to any other power source.

Planting Your Garden

1. Add Water

1. Add water to "MAX 5L" indicator located under the water port flap

2. Use room temperature tap water or bottled distilled water. Do not use well water which may interfere with our nutrients, or softened water, as it contains levels of sodium usually harmful to plants.

3. For best results, keep the water level topped up to the fill line at all times when the water level is low

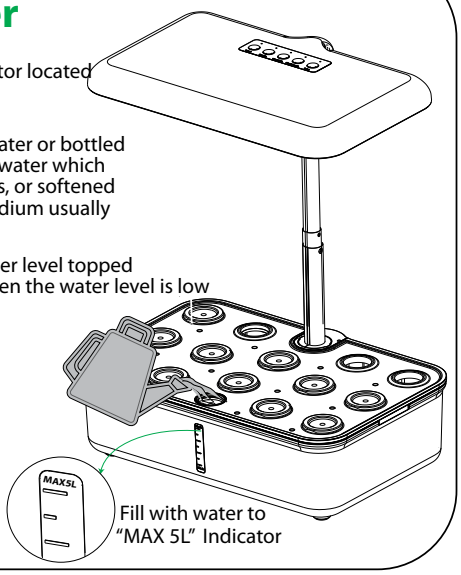

2. Add Nutrients

1. Nutrient instructions are printed on the packaging, as well as in the Seed Pod Kit Instructions booklet. Read and follow the instructions carefully!

2. Use only the recommended amount of Nutrient.

3. Do not overfeed! More isn't better. Too much nutrient may be harmful to your plants

Nutrient Feeding Tip:
Always top off water level when adding Nutrients. For best results,top off the water level in your garden regularly.

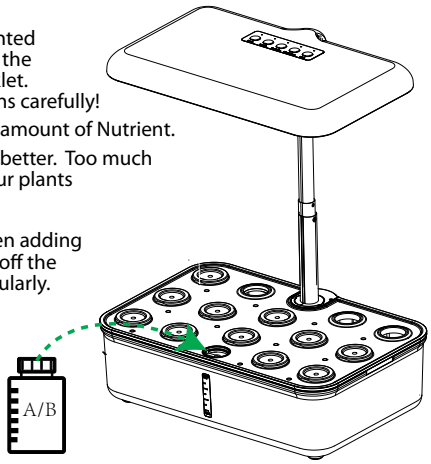

3. Add Seed Pods

1.Insert Seed Pods into openings in Grow Deck.

2. Plants grow best and look best if medium or tall plants are in back openings, and short plants are in front openings (see diagram).

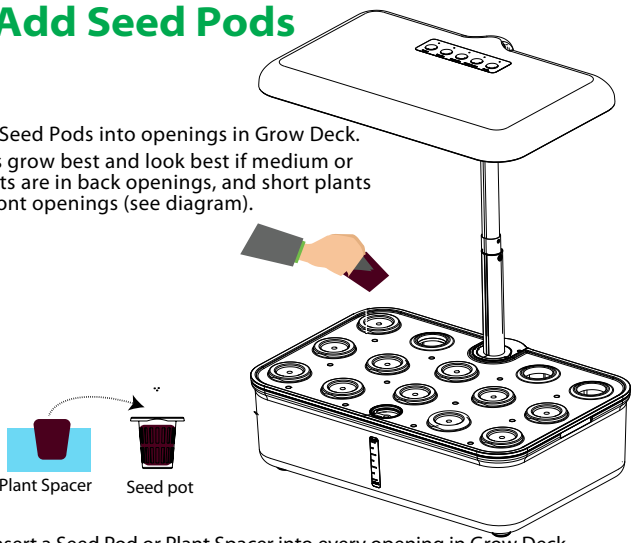

Insert a Seed Pod or Plant Spacer into every opening in Grow Deck

4. Add Grow Domes

1. Place a Grow Dome over each Seed Pod.

2. Grow Domes rest on Seed Pods and may not 'snap' into place.Also it is not necessary for Grow Domes to cover any Plant Spacers in your garden

3. Leave Grow Domes on the Seed Pods until plants have sprouted and their leaves nearly touch the domes.

4. Once removed, Grow Domes may be reused/recycled.

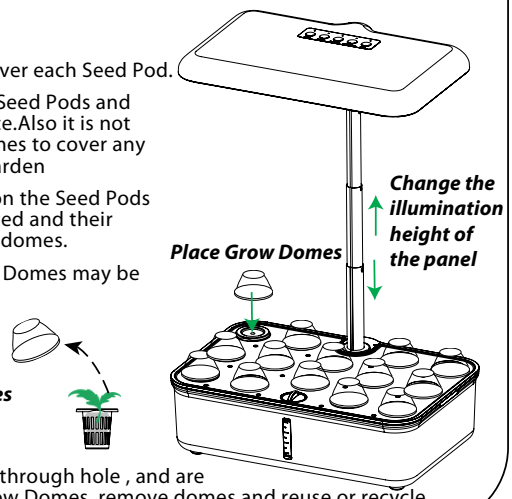

When plants sprout through hole , and are almost touching Grow Domes, remove domes and reuse or recycle.

Wi-Fi Enabled

1) Download the Smart Life App

If you don't already have the Smart Life App on your smart device, search for "Smart Life" and download the free Android or IOS app.

Download Smart Life APP

GET IT ON Google play

Available on the App Store

2) Enter configuration Mode

Long press the power button for 5s until the green light flashes quickly, and enter the pairing mode. Then Trun on the phone's bluetooth

3) Add the device

Tap "Add device" or "+" to add the smart device in app. Select "Small home Appliances " > "Plant Grower(Wi-Fi)". Waiting for connecting to be 100%. Edit the name of your Garden completed.

APP Control Setting

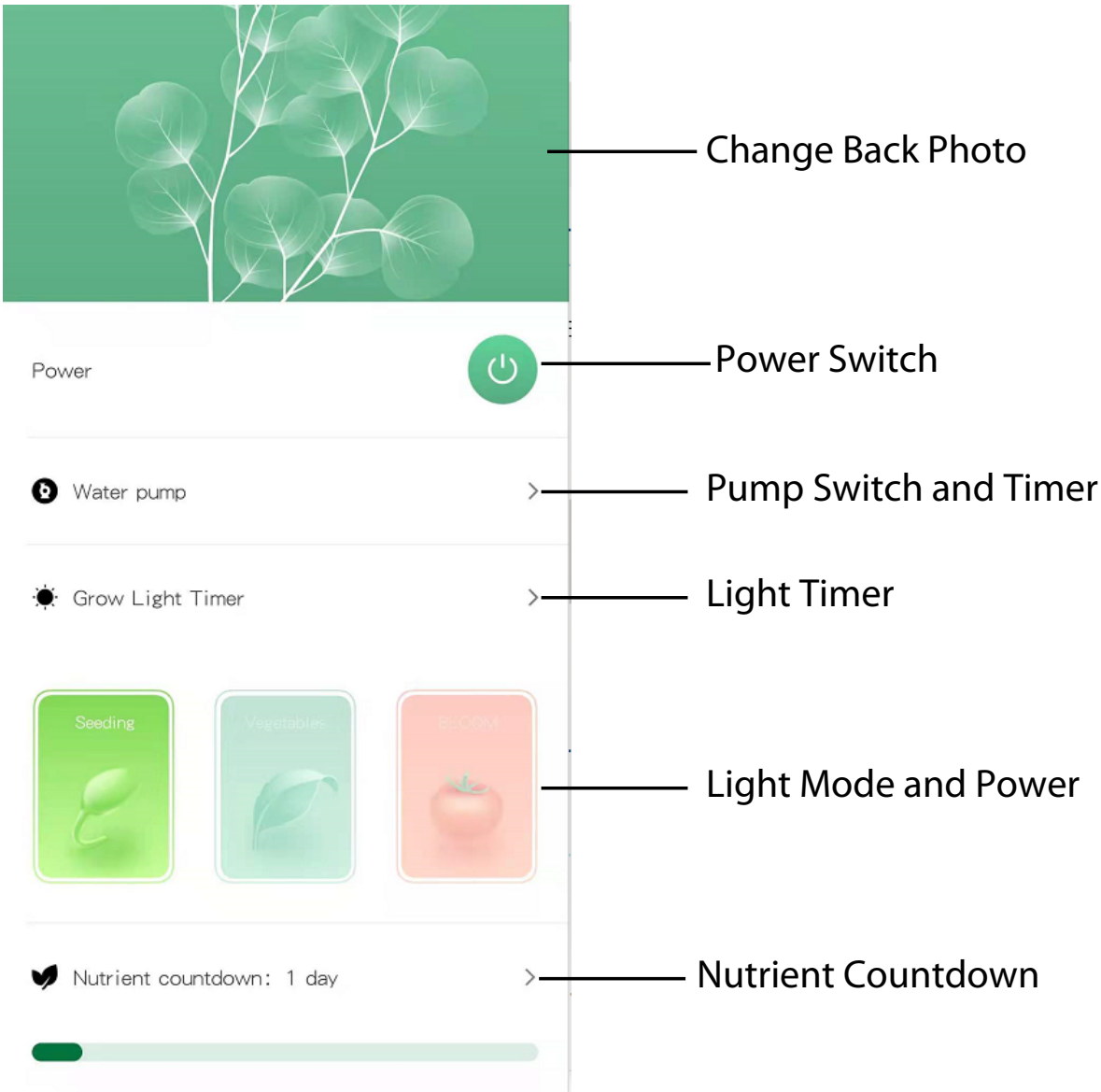

Home Screen

Garden Tips

How to configure nutrient solution

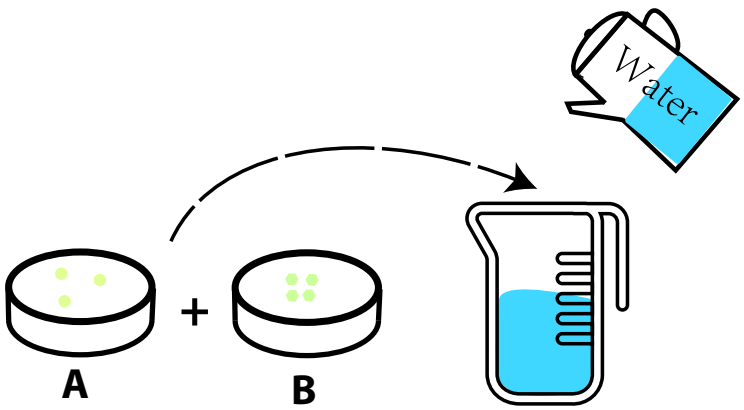

Ratio of the water

Water	Mixture Ratio
1L	3ml A+ 3ml B
2L	6ml A+ 6ml B
3L	9ml A+ 9ml B
4L	12ml A+ 12ml B
5L	15ml A+ 15ml B

Notice:

1. Nutrient particles have storage life of 2 years in unopened bottles if stored at the ambient temperature without exposure to sunlight.
2. Well-mixed nutrient solution prepared by adding water have storage life of 5 months without exposure to sunlight.
3. If there is precipitation, it's a normal henomenon.
4. Keep it beyond the reach of chilldren and ets.

How to plant Cotton Block

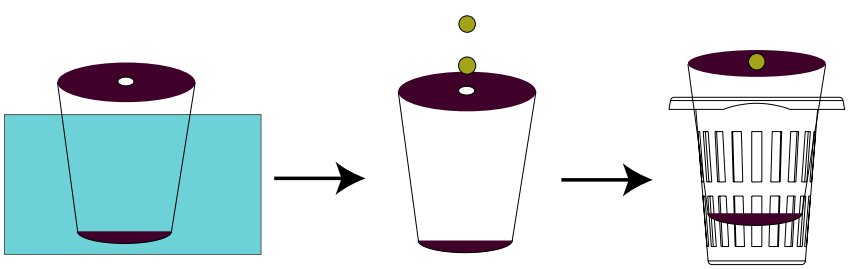

1. The seeds can be soaked in clear water for about 6 hours in advance. and then put into the bottom of the hole of the fully soaked planting cotton block
2. In general, it is recommended to put 2 seeds into each planting cotton block. During the seedling period, the well growing ones can be reserved, and the poorly growing ones can be gently pulled out or cut off with scissors.

Planting

- Many Seed Pods are labeled for height. Gardens grow and look their best when tall plants are planted in back, medium plants along the sides, and short plants in front. If plants are all the same size, like Salad Greens, they can be planted anywhere.
- Do not remove Labels from Seed Pods. The labels identify the plant type and plant height, show the germination time, and inhibit algae growth.
- Grow Domes help regulate moisture and temperature for optimal germination. Leave them on until plants are nearly touching the germination. Leave them on until plants are nearly touching the domes.

GERMINATION

- Some seeds germinate in less than 24 hours. Some take 24 days or more. Most labels give an estimate of how long your seeds will take to germinate but many factors impact germination.

Garden Tips

- As a rule of thumb, if you are comfortable, so are your plants. However, plants are impacted by temperature. Cold weather plants like Salad Greens germinate better in cooler weather. Heat lovers like Tomatoes and Peppers will germinate faster in warmer temperatures (above 70 degrees F). But don't sweat it! While they may take a bit more time, your seeds will germinate.
- If you are growing your own seeds, plant 5-6 seeds per pod and check the seed packet for information regarding temperature and check the seed packet for information regarding temperature and

PRUNING

- Lower your plants, don’t raise your lights! You wil achieve more compact, beautiful growth and bigger harvests if you prune plants to keep the lights closer to all plants.

Garden Tips

- Fast growing plants (ike Basil) make gardeners want to raise the lights too soon. Resist! Pruning the plant just above a new leaf set (Diagram A) and leaving the lights down low will ensure that slow- growing and low-growing plants in your garden get all the light they growing and low-growing plants in your garden get all the light they need to flourish
- Not pruning is the number one mistake made by new Device! Prune early and often and enjoy the small harvests!
- Prune often to maintain a healthy garden, but never take more than 1/3 of each individual plant at a time.
- Finally, pruning = harvesting. Each time you prune you get to enjoy fresh herbs in a salad, soup on pizza or a sandwich. And, a full, bushy garden looks much better than one giant, spindly plant surrounded by straggly, light starved neighbors. Pruning also releases a wonderful scent. So prune!

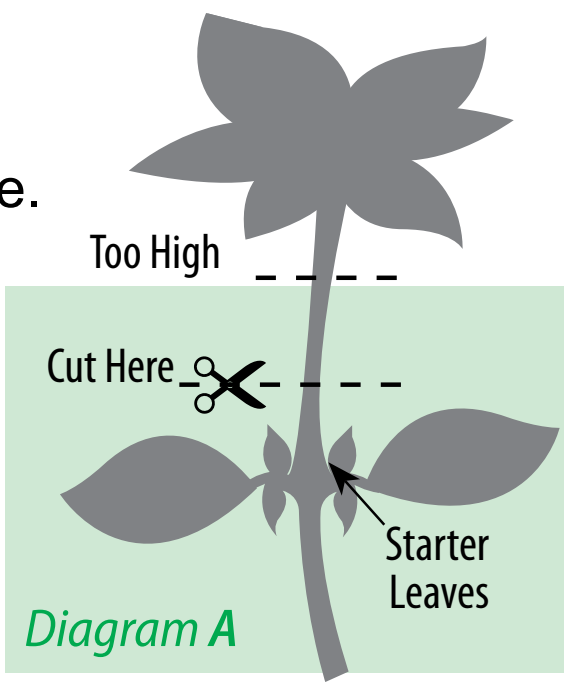

Diagram A

Garden Tips

PRUNING

- Best results are achieved by topping off water regularly.
- Plants grown in the Device are designed to thrive with most municipal tap water. Improved results can be seen with distilled water or reverse osmosis water, but this is not needed in most cases.
- Do not use well water, as most well water contains a high amount of dissolved solids that upset the balance of our nutrients. This can result in plants suddenly browning, or just not growing well.
- Do not use softened water as it contains too much sodium and will usually harm your plants.

Light

- Plants love light! Always keep your Grow Lights as close to your plants as possible. Plants should be 1-2 inches below Grow Lights.

Garden Tips

- Always check to see if you can prune plants instead of raising Grow Lights.After pruning, lower your lights back down to within 1-2 inches of plants if possible.
- You do not need to replace your LED lights unless individual diodes start to fail.

NUTRIENTS

- Typically, your plants will need nutrients every 2 weeks.
- Follow instructions for feeding amounts printed on the nutrient packaging.
- Add nutrients directly into the Bowl through the Water Tank
- Nutrient requirements may change as plants grow.
- More isn’t better. Resist the temptation to add “just a little extra.” Too much nutrient can hurt your plants
- For best results, try a "Rinse and Refill" once a month when it's time to add nutrients. Simply empty all water from the bowl, add fresh water and nutrients and reset your "Add Nutrient" alert. This balances the nutrients, delivering an instant pick up to plants.

POLLINATING

Because most people don't have bees in their home, you will need to start pollinating your fruiting plants (tomatoes, peppers, strawberries, etc) once they begin to flower (approximately 4 - 6 weeks after planting). To pollinate, use one or more of the following methods:

- Place an open hand inside plant branches and gently move your hand back and forth to shake the plant and spread the pollen.
- Place a fan near your plants and the moving air will pollinate your plants
- Strawberries can beneft from more aggressive pollination. Using an electric toothbrush, touch each flower with the brush, moving from flower to flower.

HARVESTING

- Many first-time growers are hesitant to harvest. Don't be! Most gardens will produce more, for a longer period, with frequent harvests. You almost can't begin to harvest (prune) early enough.

Garden Tips

- Garden work best with a harvesting method called “cut and come again.” Simply put, you enjoy frequent small harvests and then watch as the plants rapidly regrow - ready for harvest again and again.
- Enjoy frequent, smaller harvests for the first month or two until plants mature and larger harvests a re availa ble.
- Harvest often to maintain a healthy garden, but never take more than 1/3 of each individual plant at a time.
- For Salad Greens, cut the top 2 inches off the entire garden or harvest large leaves individually by cutting off at the base of the plant.

FCC WARNING

This device complies with part 15 of the FCC Rules. Operation is subject to the following two conditions: (1) this device may not cause harmful interference, and (2) this device must accept any interference received, including interference that may cause undesired operation.

Any changes or modifications not expressly approved by the party responsible for compliance could void the user's authority to operate the equipment.

NOTE: This equipment has been tested and found to comply with the limits for a Class B digital device, pursuant to Part 15 of the FCC Rules. These limits are designed to provide reasonable protection against harmful interference in a residential installation. This equipment generates, uses and can radiate radio frequency energy and, if not installed and used in accordance with the instructions, may cause harmful interference to radio communications. However, there is no guarantee that interference will not occur in a particular installation.

If this equipment does cause harmful interference to radio or television reception, which can be determined by turning the equipment off and on, the user is encouraged to try to correct the interference by one or more of the following measures:

-- Reorient or relocate the receiving antenna.

-- Increase the separation between the equipment and receiver.

-- Connect the equipment into an outlet on a circuit different from that to which the receiver is connected.

-- Consult the dealer or an experienced radio/TV technician for help.

To maintain compliance with FCC’s RF Exposure guidelines, This equipment should be installed and operated with minimum distance between 20cm the radiator your body: Use only the supplied antenna.