Smart Water Timer

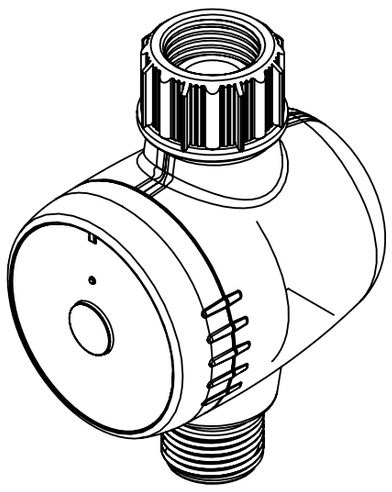

1

Congratulations on the purchase of your ECFPOWER Smart Hose Faucet Timer! Faucet watering has never been faster, easier or more convenient with the ability to control it from your phone.

You can schedule, manually operate without climbing through your shrubs to access the timer.

You can connect to your timer with the push of a button via the home screen in the app. It also allows you to water down to minutes, which is great for gardening, hydroponics, filling pet dishes or even bird baths.

Whatever your connected outdoor watering needs, ECFPOWER provides best-in-class smart products to help you more effectively manage and control your watering. Thanks for your purchase, and welcome to ECFPOWER.

2

Meet the Hose Faucet Timer

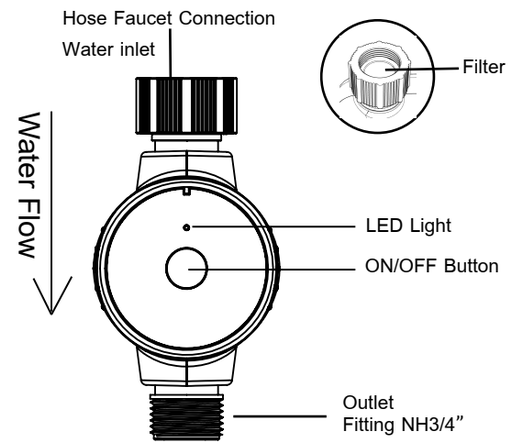

Range: 50ft without interference

Pressure operating range: 7.2-116 psi

Temperature operating range: 40.1℉-113℉(4.5°C-45 °C)

For outdoor use with cold water only,

Not suitable for drinking water

Do not mix alkaline, standard (carbon-zinc), or rechargeable (nickel cadmium) batteries. Used up or dead batteries must be removed from the timer and disposed of properly.

3

Initial Water Timer Setup

1) Insert Two AA Batteries

Batteries are not included and you will need two alkaline AA batteries to power your timer.

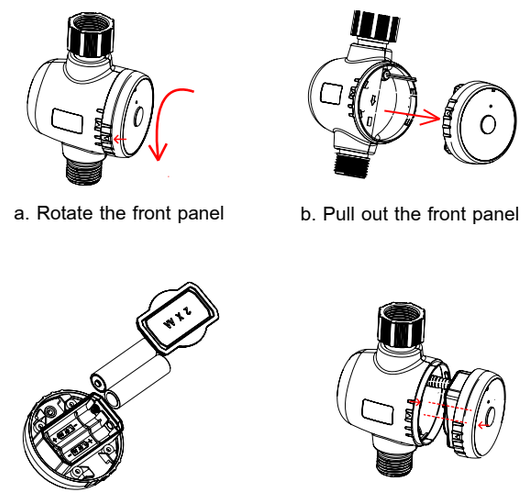

a. Rotate the front panel

b. Pull out the front panel

c. Insert the 2*AA batteries

d. Assemble as shown

4

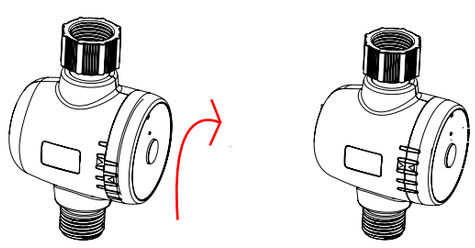

e. Assemble as shown

f. OK

2) Install the Timer

Connect the timer to an outdoor hose faucet.

Your timer is now ready to be used with any product that can be attached to a standard hose faucet.

❗ Do not place the timer in an underground valve box or anywhere your Bluetooth signal will be obstructed.

3) Turn on Your Water

The water must remain on for the timer to work properly.

5

Meet the App Home Screen

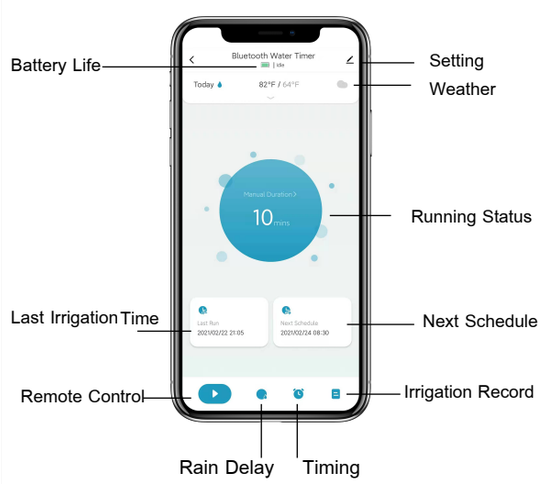

6

Initial Smart Life App Setup

1) Download the Smart Life App

If you don't already have the Smart Life App on your smart device, search for "Smart Life" and download the free Android or IOS app.

Download Smart Life APP

2) Open the Smart Life App

Create an account or login with an existing account to begin timer setup.

3) Enter configuration Mode

Long press the On/OFF button for 6s until the green light flashes quickly, and then enter the pairing mode.

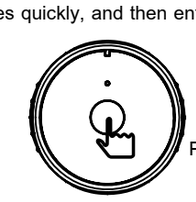

Press 6S until light flash

7

4) Add a Device

Tap "Add device" or "+" to add the smart device in app.

Select "Industry&Agriculture" > "Water valve controller(BLE)".

Waiting for connecting to be 100%. Edit the name of your water timer completed.

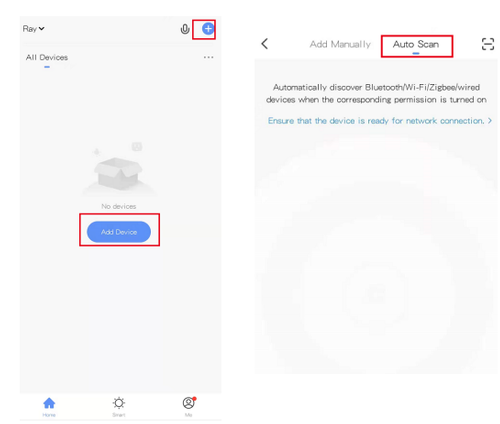

8

Additional Water Timer Features

Manual Watering

Your timer has the ability to allow you to manually water without disturbing the programmed schedule. Manual is used to test equipment, run an extra watering cycle in an area, or to use the hose faucet without removing the timer. Press the ON/OFF button to activate manual watering. Using the app you can set how long you want the preset manual cycle to run for.

Stop Watering

You can stop the flow of water at any time whether it is during manual watering, or during a programmed time. Press the ON/OFF button once to stop watering.

Rain Delay

Prevent watering when rain is in the forecast , you can temporarily suspend your watering program for up to 24H, 48H, 72H using the rain delay feature. After the selected delay has ended,your watering program will automatically resume.

9

Warm Tips

1. When expecting freezing temperatures, timer should be removed from the faucet and stored indoors to avoid potential freeze damage.

2. Please remember to clean the filter regularly and replace it if worn.

3. The installation direction of the product is top in and bottom out, otherwise the valve cannot be closed.

4. When installed, the rotary hose faucet connection, do not rotate the product, otherwise it will cause the valve head off

10

Troubleshooting

Q: Why the bluetooth water timer didn't turn on/off at preset time?

A:

1. Programming is incorrect
2. Water pressure is too low
3. Particles of dirt or debris stuck in valve
4. Faulty valve
5. The faucet is off
6. The batteries is low

Q: Do i have to keep my phone continuously in range for the timer to work

A: Once the program is set, it will run without your phone being near the device. You do have to be in range to change a program though

Q: Why irrigation recorded data will be lost?

A: When the timer connection exceeds the distance, the missing data. But does not affect the watering function of the equipment

11

Support

If you have any questions about our product, please feel free to contact us . We will followup and respond within 24 hours.

12

FCC WARNING

This device complies with part 15 of the FCC Rules. Operation is subject to the following two conditions: (1) this device may not cause harmful interference, and (2) this device must accept any interference received, including interference that may cause undesired operation.

Any changes or modifications not expressly approved by the party responsible for compliance could void the user's authority to operate the equipment.

NOTE: This equipment has been tested and found to comply with the limits for a Class B digital device, pursuant to Part 15 of the FCC Rules. These limits are designed to provide reasonable protection against harmful interference in a residential installation. This equipment generates, uses and can radiate radio frequency energy and, if not installed and used in accordance with the instructions, may cause harmful interference to radio communications. However, there is no guarantee that interference will not occur in a particular installation.

If this equipment does cause harmful interference to radio or television reception, which can be determined by turning the equipment off and on, the user is encouraged to try to correct the interference by one or more of the following measures:

-- Reorient or relocate the receiving antenna.

-- Increase the separation between the equipment and receiver.

-- Connect the equipment into an outlet on a circuit different from that to which the receiver is connected.

-- Consult the dealer or an experienced radio/TV technician for help.

To maintain compliance with FCC’s RF Exposure guidelines, This equipment should be installed and operated with minimum distance between 20cm the radiator your body: Use only the supplied antenna.