BARIX

IPAM 400

Preliminary Development Specification

Advanced, multi format IP audio module with network, USB and serial interfaces plus Wi-Fi, adding IP based streaming and controlling capabilities to OEM products

Document version	02.20
Release date	9th April 2018
Hardware Rev.	HW 12

© 2017 Barix AG, all rights reserved. All information is subject to change without notice.
All mentioned trademarks belong to their respective owners and are used for reference only

Table of Contents

TABLE OF CONTENTS **2**

INTRODUCTION **4**

About this document **4**

Additional documents **4**

About the IP AUDIO MODULE 400 **4**

Hardware features **4**

Evaluation of the Barix IP Audio Module **4**

Basic Support Package (BSP) Yocto layer **5**

HARDWARE **6**

Mechanical drawing **6**

Block diagram **7**

Network interfaces **7**

Serial interfaces **7**

Digital audio **7**

Analog audio **8**

Power supply **8**

Peripheral I/O **8**

CONNECTORS **9**

Connector placement **9**

Connector pin out **9**
J1 pin out (analog audio input and output) 9
J2 pin out (GPIO, UART, USB, I^2C) 9
J4 pin out (network, USB) 10
J5 pin out (I^2S output) 10

LAYOUT GUIDELINES **11**

General rules **11**

Carrier PCB Power and Signal Domains **12**

TECHNICAL DATA **13**

Power supply input **13**

CPUs / Boot / Memory **13**

Network interfaces **13**

Serial interfaces **13**

Peripheral I/O interfaces **13**

Audio interfaces **13**
Audio Processor (Codec) Decoding features 13
Line Input and A/D Conversion typical values 14
Microphone input and A/D conversion typical values 14
Line output and D/A conversion typical values 14

Mechanical **14**

Dimensions **14**

Weight **14**

MTBF calculations **15**

Environmental **15**

Core frequency versus Temperature variation **15**

Certifications / Compliances **16**

ORDERING INFORMATION **17**

Introduction

About this document

This Development Specification aims at giving insight to detailed technical aspects of the Barix IP AUDIO MODULE 400 (IPAM400) and complements the information given in the product sheet.

Additional documents

As several different Linux OS based images and packages can be used with the Barix IP AUDIO MODULE 400, the process of loading or updating software is covered in individual documents.
For information about the loading and configuration of the loaded firmware please refer to the corresponding software user manual and firmware technical documentation.

About the IP AUDIO MODULE 400

The IP AUDIO MODULE 400 enables manufacturers of traditional audio devices to add network capabilities to their products as well as develop IP streaming devices.

Hardware features

The Barix IP AUDIO MODULE 400 features:

- Stereo line input and output, 0dBuStereo Line in and outputs
- Microphone input (coil, powered or passive capacitive, balanced or unbalanced)
- I2S input and output (192k capable)
- Integrated SoC with ARM Cortex quad core CPU
- 10/100/100Mbit Ethernet port (with PHY)
- SD/TF card slot
- 16MB SPI Flash
- TTL level UART
- USB2.0 OTG interface, two USB2.0 Host
- Dallas 1-wire interface (e.g. for Real Time Clock)
- 7 GPIOs
- Small form factor
- Low Power consumption, runs off a single +3.3Volt DC power source
- 2 mounting holes (0.106”/2.7mm) for fixation of IP Audio Module

Evaluation of the Barix IP Audio Module

Barix recommends the IPAM evaluation board based on Annucicom 60 for evaluation purposes prior to development of an own carrier board.

Basic Support Package (BSP) Yocto layer

The BARIX IPAM400 can be used for developing multiple applications related to networked audio distribution, playback and control.

BARIX provides an embedded Linux system based on the Yocto framework and the associated Yocto layer that contains the board's Basic Support Package (BSP) for the IPAM400.

This Yocto layer can be used as a base platform to develop all kind of applications on top of it.

The provided BSP Yocto layer includes:

· Definitions for the "barix-ipam400" machine

· U-Boot boot loader

· Linux Kernel 4.x

· A default Linux Kernel device tree and Kernel configuration

· Secure Firmware update mechanism featuring a dual root file system strategy and a recovery mechanism

· Definition for a base SW image

· Scripts to create and install SW images and SW updates

All these functionalities are configurable and adaptable to the developer's needs.

Developers can use the BSP to generate the toolchain that enables the development of any application.

The BSP package is a starting point and can be easily extended by creating or adding Yocto layers that allow developers to quickly add more applications and libraries to completely customize the software and to create new SW images.

The common feature set includes:

- Embedded and robust operating system with IPv4/IPv6 IP stack
- IP standard based protocols (TCP/IP, UDP, HTTP, ICMP, SNMP)
- OEM Software development by BARIX on request
- High quality, multi standard audio encoding and decoding can be implemented in software:
  - G.711, G.722, PCM linear, Ogg Vorbis, MP3, AAC+, FLAC
  - Acoustic echo cancellation (AEC)

Hardware

Mechanical drawing

The Barix IP AUDIO MODULE 400 provides five, standard 2,54mm spacing, single row pin headers, intended to match target connector or motherboard, also suitable to soldering.

For mechanical fixation, the board provides two 2.7mm mounting holes for 2.5mm screws.
The total size is 56.1mm +/-0.2 by 33.0mm +/-0.2.

Maximum component height is 5.6mm. Using standard distance bolts of 6mm a total height of 9mm above the carrier board can be achieved when mounted on a carrier board by means of soldering the pin headers into holes of the carrier board directly.

Using single row female headers (counterpart to pin headers) the height will increase and must be measured by the integrator (our experience in production shows a minimal height of 11.5mm above the carrier board without using distance bolts and 12mm using 9mm distance bolts). Although the total height is increased, the advantage of being able to replace a module should be considered.

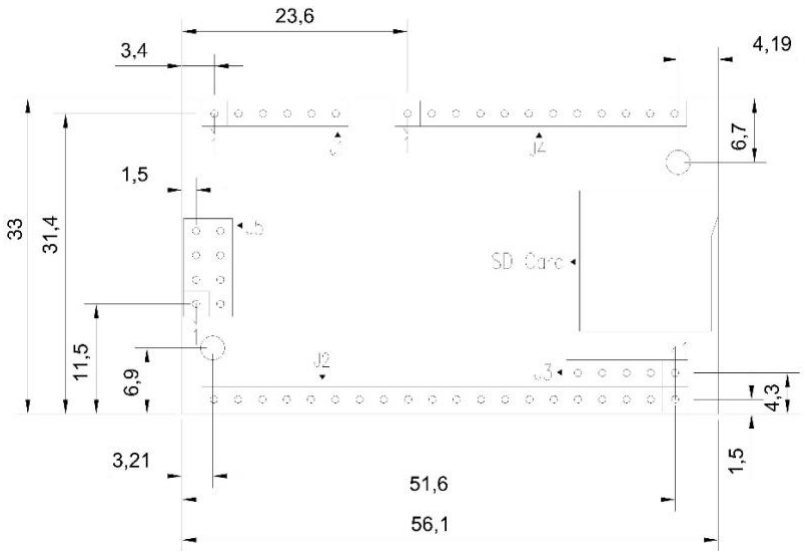

The above drawing shows the component side which faces down onto the carrier PCB.

Dimensions are metric (mm)

Drawing is not to scale

Tolerance of PCB dimension is +-0.2mm, others 0.1mm

Block diagram

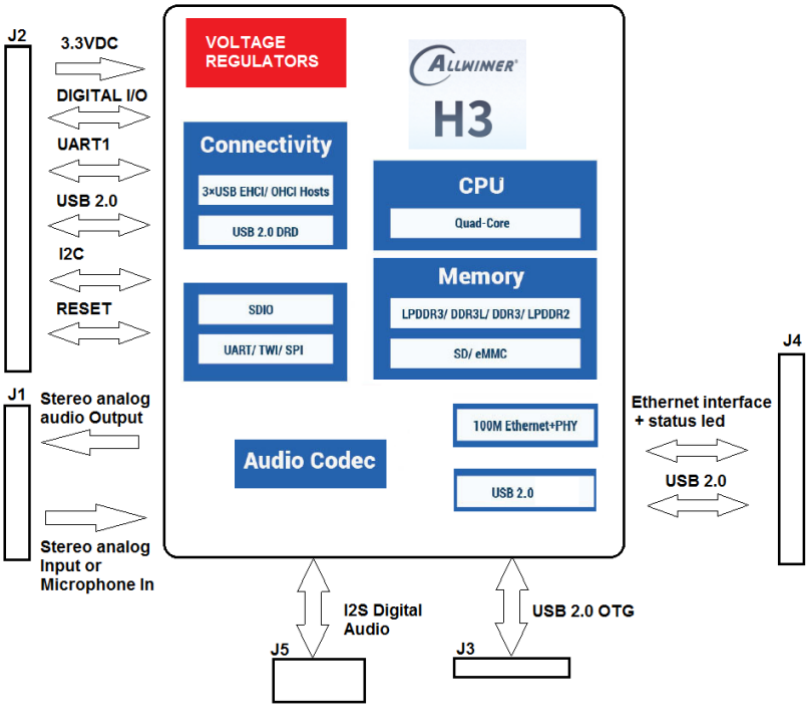

Network interfaces

1 x PHY (TP), 2 ETH Status LEDs

The Barix IP AUDIO MODULE 400 is equipped with one physical layer (PHY) Ethernet interface (10/100MBit, full / half duplex, auto-negotiation).

Two Ethernet status LEDs can be controlled.

Serial interfaces

2 x UART (TTL level), 1 x USB 2.0 OTG and 2 x USB 2.0 Host

The serial port UART0 can be used to build serial standard interfaces like RS-232 or RS-485 by attaching external driver chips. Flow control signals are available for that UART. The second UART shares its function with IO pins and is Tx/Rx only.

One USB 2.0 On-the-Go and 2 x USB 2.0 Host interfaces supporting High-Speed (HS,480Mbps), Full-Speed(FS,12Mbps) and Low-Speed(LS,1.5Mbps) in host mode. It complies with EHCI v1.0 and OHCI v1.0a.

Digital audio

I^2S (Inter-IC Sound)

The I^2S interface can be used to connect with I^2S capable devices.

Analog audio

1 x Stereo Output (L&R), 1 x Microphone Input (balanced/unbalanced) or 1 x Stereo Input

Three analog audio interfaces are provided on the Barix IP Audio Module of which two can be used concurrently (audio input can be selected to be either stereo input or microphone input).

The stereo output can be used to connect to analog amplifiers. The stereo inputs allow for the connection of analog audio sources with Line level outputs.

The microphone (differential inputs, self-biasing) supports the use of a wide selection of microphones (dynamic, capacitive, FET amplified). The positive microphone input pin is shared with the left line input so either Mic or Line In can be selected.

The SoC provides some level adjustment in software both input and output work with nominal 0dBu audio level.

Power supply

1 x VIN, 8 x DGND, 1 x AGND

One connector with pins is provided to power the Barix IP Audio Module from a single +3.3 Volt DC power source. Several ground pins are implemented. It is common practice to connect them all to the ground plate.

A separate ground domain for the analog part needs to be connected via separate ground pin.

Max. power consumption of the IPAM 400 is 4 Watts

A separate ground is provided for the audio interfaces.

Peripheral I/O

6 x GPIO

Of the seven 3.3VDC digital general purpose I/Os available on the IP AUDIO MODULE 400 three can be used freely by OEM software as either input or output while four I/Os are reserved for designated functions (see below). When configured as input (default) the I/O is internally pulled up to 3.3 VDC.

Reserved functions:

- Two I/O pins serve as a user interface for driving status LEDs (green and red)
- One I/O it is used to control power on of the amplifier

IO/IR-in/RXD3	**B**	GPIO# PA14, Infrared input, UART_3 data receive
D0-REL	**B**	GPIO#PA10
IO/TXD3	**B**	GPIO#PA13 / UART_3 data transmit
IO/RTS3	**B**	GPIO#PA15 / UART_3 flow control output
IO/CTS3	**B**	GPIO#PA16 / UART_3 flow control input
OWA_OUT	**B**	GPIO#PA17 / OWA(One Wire Audio); SPDIF interface.

Connectors

Connector placement

For connector placement (and type) please refer to the mechanical drawing in previous chapter.

Connector pin out
J1 pin out (analog audio input and output)

Pin #	Name	Type	Description (usage)
1	MICIN1N	**AI**	Mic balanced negative input (unbal. Mic / line: connect 1uF to GND)
2	MICIN1P	**AI**	Mic positive input or Left channel audio input (for line see remark above)
3	AGND	**P**	Audio Ground
4	INR	**AI**	Right channel audio input
5	LINEOUTL	**AO**	Left channel audio output
6	LINEOUTR	**AO**	Right channel audio output

Type: AI=Audio Input, AG=Audio Ground (centrally connected to DGND), AO=Audio Output

Connector pin out
J2 pin out (GPIO, UART, USB, I^2C)

Pin #	Name	Type	Description (usage)
1	-RST	**D**	Active low Reset I/O (Hardware reset from power surveillance)
2	IO/IR-in/RXD3	**B**	GPIO# PA14, Infrared input, UART_3 data receive, second amplifier shutdown
3	DGND	**P**	Digital Ground
4	D0-REL	**B**	GPIO#PA10
5	IO/TXD3	**B**	GPIO#PA13 / UART_3 data transmit
6	IO/RTS3	**B**	GPIO#PA15 / UART_3 flow control output
7	IO/CTS3	**B**	GPIO#PA16 / UART_3 flow control input
8	OWA_OUT	**B**	GPIO#PA17 / **OWA(One Wire Audio);complies with SPDIF interface**
9	Recovery	**B**	VCC_IO_EN (Button for Reset/Factory defaults/Bootloader)
10	DGND	**P**	Digital Ground
11	VIN	**P**	Audio module input Voltage 3.3 VDC
12	CTS1	**I**	UART_1 flow control input
13	RTS1	**O**	UART_1 flow control output
14	RXD1	**I**	UART_1 data receive
15	TXD1	**O**	UART_1 data transmit
16	DGND	**P**	Digital Ground
17	USBDM1	**B**	USB 2.0 Host Interface negative
18	USBDP1	**B**	USB 2.0 Host Interface positive
19	TWI0-SCK	**B**	GPIO#PA11 /I²C Clock (Connected internally / Internal testing only)
20	TWI0-DA	**B**	GPIO#PA12 /I²C Data (Connected internally / Internal testing only)

Type: O=Output, I=Input, P=Power, B=bidirectional, D = Open Drain (pull-up resistor on module)

Connector pin out
J3 pin out (USB OTG, Host)

Pin #	Name	Type	Description (usage)
1	Reserved		
2	USB-IDDET	**I**	USB ID detection
3	DGND	**P**	Digital Ground
4	USBDM0	**B**	USB 2.0 Host Interface negative / USB 2.0 OTG Interface negative
5	USBDP0	**B**	USB 2.0 Host positive negative / USB 2.0 OTG Interface positive

Type: O=Output, I=Input, P=Power, R = Reference level

Connector pin out

J4 pin out (network, USB)

Pin #	Name	Type	Description (usage)
1	EPHY-TXP	**O**	Transceiver positive output
2	TCT	**R**	Transmit Transformer center Tap
3	EPHY-TXN	**O**	Transceiver negative output
4	DGND	**P**	Digital Ground
5	EPHY-RXN	**I**	Transceiver negative input
6	RCT	**R**	Receive Transformer center Tap
7	EPHY-RXP	**I**	Transceiver positive input
8	DGND	**P**	Digital Ground
9	USBDM2	**B**	USB 2.0 Host Interface negative
10	EPHY-SPD-LED	**O**	Ethernet 10/100M indicator LED
11	EPHY-LINK-LED	**O**	Ethernet LINK up/down LED
12	USBDP2	**B**	USB 2.0 Host Interface positive

Type: O=Output, I=Input, P=Power, R = Reference level

Connector pin out

J5 pin out (I^2S output)

Pin #	Name	Type	Description (usage)
1	PCM0_CLK	**O**	I^2S serial clock output
2	PCM0_DO	**O**	I^2S serial data output
3	PCM0_SYNC	**O**	I^2S frame indication
4	DGND	**P**	Digital Ground
5	Reserved		
6	X24MO	**O**	Clock Output 24MHz Crystal
7	DGND	**P**	Digital Ground
8	PCM0_DI	**I**	I^2S serial data input

Type: O=Output, P=Power

Layout Guidelines

General rules

- A low ESR Capacitor of 10uF to 47uF in parallel to a low loss ceramic 100nF capacitor is recommended as power supply bypass close to the Barix Audio Module's power supply pins.
- All available ground pins of the Barix Audio Module should be attached to their respective ground domain.
- Analog and digital ground domains must be connected outside of the IPAM 400 ! To allow low noise designs, the analog ground domain on the IPAM is kept unconnected from the digital (noisy) ground.
- Avoid signal trace routing crossing domain borders (see graphic on next page).
- Restricted Area A must not contain any high current switching circuitry nor any components creating magnetic flux (see graphic on next page).
- Flood unused PCB areas with copper and connect those planes to it's respective ground.
- Designers should use good PCB layout techniques suited for high speed bidirectional data bus design when the USB signal run is more than a few cm in length
- The USB signal lines should be of equal electrical length and track width for their entire length
- The USB signal lines include provision for termination resistors (to DGND). The exact value of the terminations may need to be checked or confirmed by a designer and are in the vicinity of 15 Kilo-Ohms (+/- 5%). These termination resistors should be close to either the USB socket or the IPAM connector.
- A more complex (capacitive) termination may be needed under some circumstances.
- Any unused pins can be left open to save power consumption (no pull-up or pull-down needed).
- Any unused audio pins can be left open. Only exception is the need of a 1uF capacitor on MICI- (CON3 pin 1) to ground when using as unbalanced Mic input or when using Line in.
- When planning on variations of carrier PCBs consider a filter consisting of a resistor/ inductivity and a capacitor (close to the target devices connector) for audio inputs and outputs:
    - For audio inputs always place a filter capacitor (Ci, see schematic below) to ground just after the above-mentioned resistor/ inductivity (towards the IPAM connector).

      For unused audio connectors inputs simply do not populate the resistor/inductivity. Calculate the values for this R-C filter according to your use (desired cut-off frequency versus impedance).
    - For audio outputs always place a filter capacitor (Co, see schematic below) to ground just after the above-mentioned resistor/ inductivity (towards the IPAM connector) and populate the resistor/inductivity. Calculate the values for this R-C filter according to your use (desired cut-off frequency versus impedance).

- Although all audio inputs are DC-decoupled consider the use of current limiting resistors in the audio signal path close to the devices connectors. It is a good procedure to also limit the max input voltage to 3.3 volts using zener diodes (ZDi) right after the resistor.
-

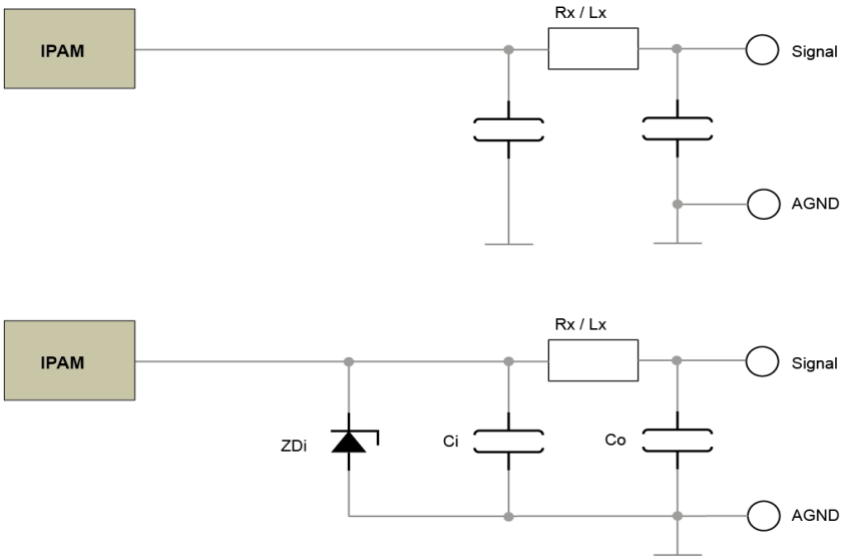

Carrier PCB Power and Signal Domains

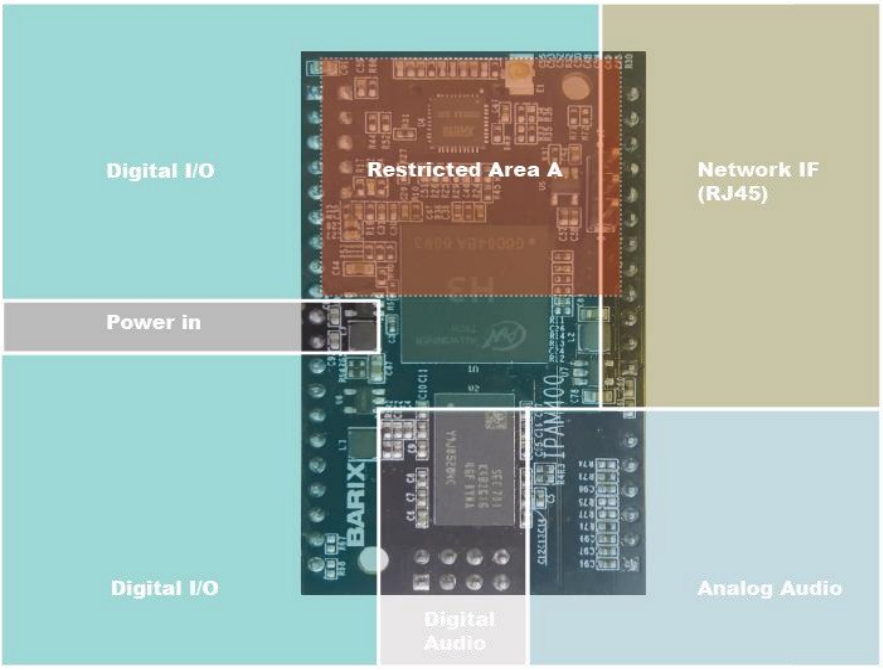

Relevant excerpt from previous chapter "General Rules":

- All available ground pins of the Barix Audio Module should be attached to their respective ground domain.
- You MUST provide analog ground to the PCB and that ground must be connected to the power supply ground externally to the IPAM (on the carrier PCB)
- Avoid signal trace routing crossing domain borders (see graphic above).

Technical data

Power supply input

Parameter	Min	Max	Unit
Supply voltage (Nominal)	3.3	3,3	VDC
Supply voltage (Absolute Maximum Ratings)	3.2	3.4	VDC
Power consumption max.		4	W

CPUs / Boot / Memory

Parameter	Details
Central processor unit	Quad-core ARM Cortex™ –A7 MPCore™ Processor
Boot	Supports fast boot process from Flash or SD/TF card
Encryption	Crypto Engine (CE)
Memory features	• 32KB L1 Instruction cache and 32KB L1 data cache per core • 512KB L2-cache • VFPv4 Floating point unit • Supports LPAE and NEON Advanced SIMD
Memory	16MB SPI flash
Ext. memory	Supports TF and SD card

Network interfaces

Parameter	Details
Ethernet type	10/100 Base (integrated PHY)
Functionality	10/100 Mbit, full / half duplex, auto negotiation
Status display	Link / Activity LED
Protocols	TCP/IP, UDP, RTP, SIP, DHCP

Serial interfaces

Parameter	COM 1 (UART 0)
Signals	RxD, CTS both TTL 3.3 VDC, TxD, RTS both TTL 3.3VDC (VH min. 0.7*Vin), GND
Baud rates	300 .. 115200
Data bits	7 or 8
Parity	No, Even, Odd
Stop bits	1 or 2
Flow control	No, XON/XOFF

Peripheral I/O interfaces

Parameter	Min	Max	Unit
IIN/Out current for input and output	-40	40	mA
VIL Input Low Voltage	-0.3	0.3*Vin	VDC
VIH Input High Voltage	0.7*Vin	Vin+0.3Vdc	VDC
VOL Output low voltage @IOL max 4 mA	0	0.2	VDC
VOH Output high voltage @IOH max 4 mA	Vin-0.2Vdc	Vin	VDC

Audio interfaces

Audio Processor (Codec)
Decoding features

Format	Sampling rate / Bit rate & type
PCM 16bit linear	8..48 kHz
PCM 8bit logarithmic (µLaw / aLaw)	8..48 kHz
G.722	16 kHz
Ogg Vorbis [1]	48 kHz / 500 kbps
MPEG1 & MPEG2 Layer 3 (MP3) [1]	8 to 48 kHz / 32..192 kbps, constant bit rate (CBR) and variable bit rate (VBR)

[1] *in a future firmware release*

Audio interfaces
Line Input and A/D Conversion typical values

Parameter	Value	Unit
Input clipping level (input gain set to 0 dBu)*	0.975 2.76 +2	V_{RMS} V_{PP} dBu
Analog input impedance	2000	Ω
Frequency response (-3dB) @ 48 kHz sample rate PCM	20..22750	Hz
Signal-to-noise ratio (SNR)	>90dB	dB
Dynamic Range (16 bit theoretical)	96	dB
Total Harmonic Distortion (THD @ -3dBFS)	<0.02	%
Interchannel Isolation (Stereo Cross Talk)	Better -60	dB

*Software selectable input gain from -3db to +19.5dB in 1.5 dB steps

Audio interfaces
Microphone input and A/D conversion typical values

Parameter	Value	Unit
Input clipping level (at input gain 0 dB and microphone gain 21dB)*	0.111 -26.9	V_{PP} dBu
Analog input impedance (differential)	18	kΩ
Frequency response (-3dB) @48 kHz sample rate PCM	21..22'750	Hz
Analog line input signal-to-noise ratio (SNR)	-73	dB
Dynamic Range (16 bit theoretical)	96	dB
Input Total Harmonic Distortion (THD @ -3dBFS)	0.018	%

* Software selectable input gain on microphone input

Audio interfaces
Line output and D/A conversion typical values

Parameter	Value	Unit
Full Scale Output Voltage (Peak-to-peak) unloaded *	2.39 0.844 0.745	V_{PP} V_{RMS} dBu
Analog output impedance	tbd	Ω
Frequency response (-3dB) @ 48 kHz sample rate PCM	20..21500	Hz
Output signal-to-noise ratio (SNR)	>92	dB
Dynamic Range (16 bit theoretical)	96	dB
Output Total Harmonic Distortion (THD @ -3dBFS)	0.029	%
Interchannel Isolation (Stereo Cross Talk)	Better -66	dB

**Output level (software controllable) set to max.*

Mechanical

Weight

14 grams / 0.494 oz. Min. 950 000h acc. to MIL217F at 40°

Dimensions

Parameter	Length	Height	Width	Unit
Complete Printed Circuit Board	56.1 2.2	11.44 0.45	33.0 1.3	mm inch
Printed Circuit Board only		1.27 0.05		mm inch
Connector height above PCB component side		8.9 0.35		mm inch
Connector height above PCB rear side		1.27 0.05		mm inch
Component height max above PCB		5.6 0.22		mm inch

MTBF calculations

Parameter	Value	Unit
MTBF calculated according to	MIL217F	-
Calculated Supply Voltage	3.3	VDC
Calculated Temperature (ambient)	25 77	° C ° F
Calculated Temperature (inside device, e.g. Barix Instreamer)	40 104	° C ° F
Calculation for Ground Mobile Device	TBD	hours
Calculation for Ground Fix Device	950000	hours

Environmental

Parameter	Value	Unit
Operating Temperature Range	**-20…+65** **-4…149**	**° C** **° F**
Operating Humidity Range (non-condensing)	**0..70**	**%**
Storage Temperature Range	**0...+70** **32....158**	**° C** **° F**
Storage Humidity Range (non-condensing)	**0...70**	**%**

Core frequency versus Temperature variation
(CPU load: 100%)

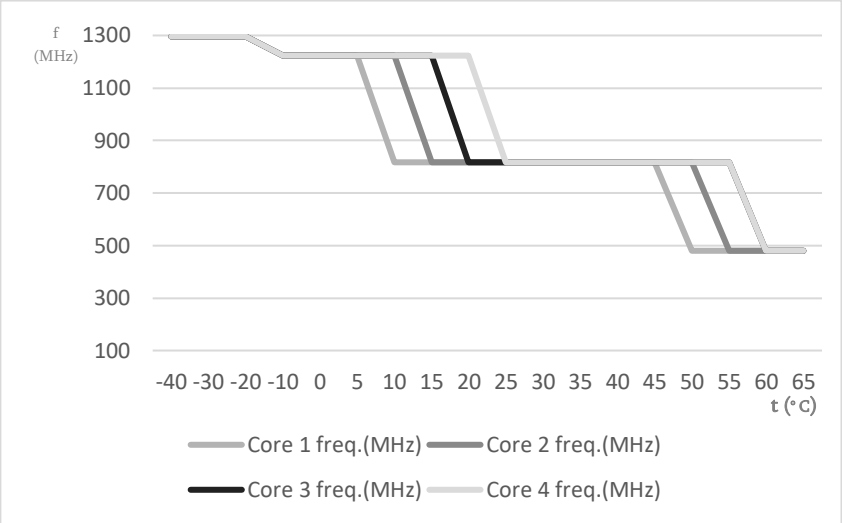

Core frequency versus Temperature variation
(CPU load: 50%)

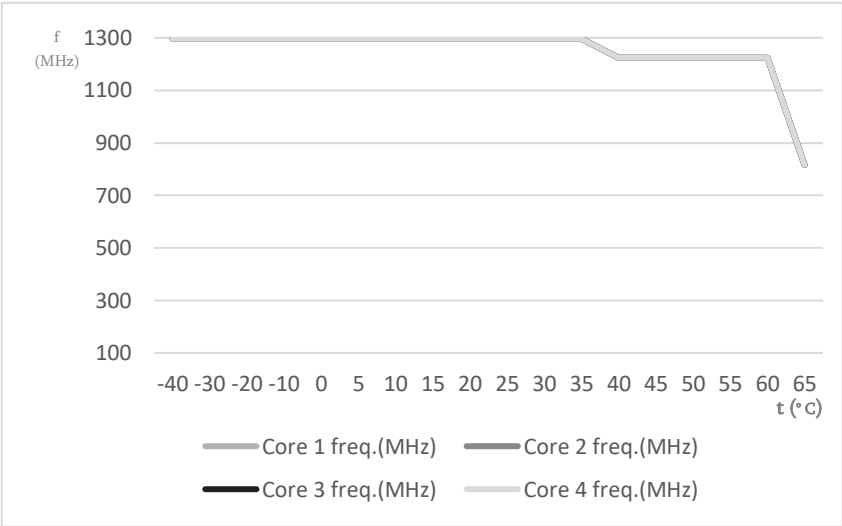

Certifications / Compliances	Complies with RoHS
	FCC ID
	RED
	CE

FCC WARNING
This device complies with part 15 of the FCC Rules. Operation is subject to the following two conditions: (1) this device may not cause harmful interference, and (2) this device must accept any interference received, including interference that may cause undesired operation.
Any changes or modifications not expressly approved by the party responsible for compliance c ould void the user's authority to operate the equipment.
NOTE: This equipment has been tested and found to comply with the limits for a Class B digital device, pursuant to Part 15 of the FCC Rules. These limits are designed to provide reasonable protection against harmful interference in a residential installation. This equipment generates, uses and can radiate radio frequency energy and, if not installed and used in accordance with the instructions, may cause harmful interference to radio communications. However, there is no guarantee that interference will not occur in a particular installation.
If this equipment does cause harmful interference to radio or television reception,
which can be determined by turning the equipment off and on, the user is encouraged to try to correct the interference by one or more of the following measures:
-- Reorient or relocate the receiving antenna.
-- Increase the separation between the equipment and receiver.
-- Connect the equipment into an outlet on a circuit different
from that to which the receiver is connected.
-- Consult the dealer or an experienced radio/TV technician for help.
To maintain compliance with FCC's RF Exposure guidelines, This equipment should be installed and operated with minimum distance between 20cm the radiator your body: Use only the supplied antenna.
Changes or modifications made to this equipment not expressly approved by (BARIX) may void the FCC authorization to operate this equipment
FCC ID: 2APAE-IPAM400

Ordering Information

IPAM 400	**2017.9xxx**

© 2017 Barix AG, Dübendorf, Switzerland.

All rights reserved.

All trademarks belong to their respective owners and are used for reference only.

Barix and Barix IP Audio Module are trademarks of Barix AG, Switzerland and are registered in certain countries.

Newest information about our devices is available via download from our website, www.barix.com.

We explicitly reserve the right to change and improve the product without notice.

Barix AG

Ringstrasse 15a

8600 Dübendorf

SWITZERLAND

T +41 43 433 22 11

F +41 44 274 28 49

www.barix.com

sales@barix.com

support@barix.com